COMBINED OPERATION
and
MAINTENANCE PRACTICE
for models
520B2 and 520B3

Part Number: 4200-0520-01
Revision: A
Date: 10-20-86

CXR/Halcyon * 755 Ravendale Drive * Mountain View, CA 94043

415/965-7100 Telex 284-684

LIST OF EFFECTIVE PAGES

INSERT LATEST CHANGED PAGES. DESTROY SUPERSEDED PAGES.

NOTE: The portion of the text affected by the changes is indicated by the vertical line in the outer margins of the page. Changes to illustrations are indicated by miniature pointing hands. Changes to wiring diagrams are indicated by shaded areas.

Dates of issue for original and changed pages are:

Original . . 0 . . 10 Oct 1981
Change . . 1 . . 15 Nov 1985
Change . . 2 . . 7 Jan 1986

TOTAL NUMBER OF PAGES IN THIS PUBLICATION IS 335 CONSISTING OF THE FOLLOWING:

Page No.	*Change No.
Title	2
A	2
1	0
ii	1
iii-iv	0
v	1
vi-vii	0
1-0	0
1-1	1
1-2	0
1-3	2
1-4 - 1-5	0
1-6	2
2-1 - 2-3	0
2-4 Blank	0
3-1 - 3-32	0
3-33 - 3-34	1
3-35 - 3-59	0
3-60 Blank	0
5-1 - 5-3	0
5-4	2
5-5 - 5-17	0
5-18	2
5-19	1
5-20 - 5-68	0
6-1 - 6-110	0
Glossary 1	0
Glossary 2	0
FO-1 (1 of 8)	0
FO-1 (2 of 8)	0
FO-1 (3 of 8)	0
FO-1 (4 of 8)	0
FO-1 (5 of 8)	0
FO-1 (6 of 8)	0
FO-1 (7 of 8)	0
FO-1 (8 of 8)	0
FO-2 (1 of 8)	0
FO-2 (2 of 8)	0
FO-2 (3 of 8)	0
FO-2 (4 of 8)	0
FO-2 (5 of 8)	0
FO-2 (6 of 8)	0
FO-2 (7 of 8)	0
FO-2 (8 of 8)	0
FO-3 (1 of 2)	0
FO-3 (2 of 2)	0
FO-4 - FO-6	0
FO-7 (1 Of 2)	0
FO-7 (2 of 2)	0
FO-8 (1 Of 2)	0
FO-8 (2 of 2)	0
FO-9	0
FO-10 (1 Of 2)	0
FO-10 (2 of 2)	0
FO-11	0
FO-12 (1 Of 2)	0
FO-12 (2 of 2)	0
FO-13 (1 Of 2)	0
FO-13 (2 of 2)	0
FO-15 (1 Of 2)	0
FO-15 (2 of 2)	0
FO-16 (1 Of 2)	0
FO-16 (2 of 2)	0
FO-17 (1 Of 2)	0
FO-17 (2 of 2)	0
FO-18 - FO-20	0
FO-21 (1 Of 2)	0
FO-21 (2 of 2)	0
FO-22 (1 Of 2)	0
FO-22 (2 of 2)	0
FO-23 - FO-24	0
FO-25 (1 Of 2)	0
FO-25 (2 of 2)	0
FO-26 (1 Of 2)	0
FO-26 (2 of 2)	0
Addendum 1 - 10.	1
FO-27 (1 Of 2)	1
FO-27 (2 of 2)	1
FO-28 (1 Of 3)	1
FO-28 (2 of 3)	1
FO-28 (3 Of 3)	1

***Zero in this column indicates an original page.**
***One or two in this column indicates a changed page.**

USAF

Digitized by the Internet Archive
in 2024

https://archive.org/details/manualsplus_02996

TABLE OF CONTENTS

Chapter/Para		Page
	WARRANTY	vii
	SAFETY PRECAUTIONS	vii
1	DESCRIPTION	1-1
1-1.	Introduction	1-1
1-2.	Purpose of Equipment	1-1
1-3.	Description of Equipment	1-1
	a. Model 520B2 Plug-In	1-1
	b. Model 500B Mainframe	1-2
1-4.	Performance Characteristics	1-2
1-5.	Accessories Supplied	1-2
1-6.	Optional Accessories	1-2
2	INSTALLATION	2-1
2-1.	Unpacking and Inspection	2-1
2-2.	Preparation for Use	2-1
	a. Power Requirements	2-1
	b. Mating Signal Connectors	2-1
	c. Preset PC Board-Mounted Switches	2-1
	d. Peak-to-Average Ratio (P/AR) Installation	2-1
	e. Mounting Configurations	2-2
2-3.	Incoming Performance Inspection	2-2
2-4.	Storage and Reshipment	2-2
3	OPERATION	3-1
3-1.	Introduction	3-1
3-2.	Description of Controls	3-1
	a. Mode Selection	3-3
	b. Receiver Controls	3-8
	c. Transmitter Controls	3-10
	d. Display Controls	3-11
	e. Mainframe Front-Panel Controls	3-12
	f. Rear-Panel Controls and Connectors	3-13
3-3.	Internal Preset Switches	3-14
	a. LOCK Frequency	3-14
	b. TLP Correction Factor	3-15
	c. Display Blanking	3-15
	d. Factory Test Convenience	3-15
3-4.	Turn-on and Initial Setup Procedures	3-15
	a. Turn-on Procedures	3-15
	b. Initial Control Settings	3-15
3-5.	On-line Measurement Procedures	3-16
	a. Circuit Loss Measurement	3-17
	b. Attenuation Distortion (Frequency Response) Measurement	3-18
	c. Delay Distortion Measurement	3-22
	d. P/AR Measurement	3-25
	e. Noise Measurement	3-27
	f. Phase Jitter Measurement	3-31
	g. Nonlinear Distortion Measurement	3-32
	h. Hit Measurement	3-34
	i. Repeat Mode Measurement	3-37
	j. Dial, Hold, and Talk Procedures	3-40
3-6.	Oscilloscope Display Procedures	3-40
	a. Oscilloscope Setup	3-40
	b. Attenuation Distortion Measurement	3-42

TABLE OF CONTENTS — Continued

Chapter/Para		Page
	c. Repeat Mode — Attenuation Distortion Measurement. . . .	3-42
	d. Delay Distortion Measurement. . . .	3-44
	e. Signal Impairment Display (SID). . .	3-47
3-7.	X-Y Recording Procedures	3-49
	a. Initial Setup. . . .	3-49
	b. Attenuation Distortion Measurement .	3-52
	c. Delay Distortion Measurement. . . .	3-53
3-8.	Self-Check Procedures. .	3-54
	a. Level/Frequency. . .	3-55
	b. Oscilloscope Display	3-56
	c. P/AR	3-56
	d. Noise.	3-56
	e. Phase Jitter	3-57
	f. Nonlinear Distortion	3-57
	g. Envelope Delay . . .	3-58
	h. Hit Measurement. . .	3-58
4	PRINCIPLES OF OPERATION	4-1
4-1.	Introduction	4-1
4-2.	Model 520B2 Plug-In . .	4-1
	a. Transmitter Functional Description. . . .	4-1
	b. Receiver Functional Description. . . .	4-3
4-3.	Model 500B Mainframe . .	4-6
	a. Low Voltage Power Supply (LVPS). . .	4-6
	b. High Voltage Power Supply (HVPS). . .	4-7
	c. Deflection Amplifier and Memory	4-7
5	MAINTENANCE	5-1
5-1.	Introduction	5-1
5-2.	Test Equipment Required.	5-1
5-3.	Preventive Maintenance .	5-1
	a. Cleaning	5-1
	b. Inspection	5-1
5-4.	Performance Verification	5-1
	a. Preliminary Instructions . . .	5-2
	b. Model 520B2 Plug-In Verification . . .	5-3
	c. Model 500B Mainframe Verification . . .	5-10
5-5.	Repair and Replacement .	5-11
	a. Model 520B2 Plug-In.	5-11
	b. Plug-in Circuit Cards	5-11
	c. Model 520B2 Front Panel Assembly . .	5-12
	d. Power Supply	5-14
	e. Cathode-Ray Tube . .	5-14
	f. General Repair Procedures	5-15
5-6.	Calibration	5-15
	a. Initial Control Settings	5-17
	b. Power Supply Check and Adjustment . .	5-17
	c. Model 520B2 Plug-In Calibration. . . .	5-18
	d. Model 500B Mainframe Calibration . . .	5-21
5-7.	Troubleshooting.	5-22
	a. General Troubleshooting Procedures	5-22
	b. Reference Information. . . .	5-22
	c. Troubleshooting Sequence	5-23
5-8.	Schematic Diagrams and Wire Lists	5-24
6	ILLUSTRATED PARTS BREAKDOWN . .	6-1
6-1.	General.	6-1
6-2.	Parts Lists	6-1
	a. Figure and Reference Number	6-1
	b. Description.	6-1
	c. Manufacturer's Code.	6-1
	d. Manufacturer's Part Number	6-1
	e. Halcyon Part Number.	6-1
	f. SMR Code	6-1
GLOSSARY	. . . . .	Glossary 1
ADDENDUM		

LIST OF ILLUSTRATIONS

Figure	Title	Page
1-1.	Universal Test System Models 520B2-07 and 520B2-17.	1-0
2-1.	Rack Adaptor Kit Installation	2-3
3-1.	Controls, Connectors, and Indicators	3-1
3-2.	P/AR, NOISE, Ø JITTER, and NONLINEAR Mode Selection Controls.	3-4
3-3.	AMP RESP, DELAY, and REPEAT Mode Selection Controls.	3-5
3-4.	HIT MEASUREMENTS, LEVEL IN, NOISE/TLP CORRECTION, 600/900, TERM/BRDG, and C-MSG/3 KHz Control Groups.	3-7
3-5.	S/N-REF-START, 2nd/3rd, LEVEL OUT, SGL/AUTO/ MAN, SWEEP RATE, TUNE, CONT/LOCK, CONT/SF, 83 /3 - 25, and TRANS-MIT FUNCTION Control Groups.	3-9
3-6.	Primary Display, Non-valid Measurements, DISPLAY OFFSET, FREQ Hz Display, and RCV/XMT Control Groups.	3-12
3-7.	Mainframe Front-Panel Controls.	3-13
3-8.	Rear-Panel Controls, Connectors, and Fuse. . .	3-14
3-9.	Initial Control Settings. .	3-16
3-10.	Circuit Loss Measurement Controls.	3-18
3-11.	Attenuation Distortion (Frequency Response) Near-End to Far-End Measurement Controls. . .	3-19
3-12.	Attenuation Distortion (Frequency Response) Near-End to Far-End Measurement Controls, with Far-End 520B2 in Repeat Mode, and Far-End to Near-End Measurement Controls. . .	3-21
3-13.	Delay Distortion Measurement Controls	3-24
3-14.	Delay Distortion and P/AR Measurement Controls. . .	3-26
3-15.	Noise-to-Ground Adapter (Halcyon PN 8220-0003-90).	3-27
3-16.	Noise Measurement Controls.	3-28
3-17.	Noise-to-Ground Measurement Controls	3-30
3-18.	Phase Jitter and Nonlinear Distortion Measurement Controls.	3-32
3-19.	Nonlinear Distortion Correction	3-34
3-20.	Nonlinear Distortion Measurement Controls (Manual Gain Control)	3-35
3-21.	Hit Measurement Controls. .	3-36
3-22.	Repeat Mode Measurement and Dial, Hold, and Talk Controls	3-39
3-23.	Oscilloscope Display Controls	3-41
3-24.	Oscilloscope Attenuation Distortion Measurement Controls	3-42
3-25.	Oscilloscope Attenuation and Delay Distortion Measurement Controls. . .	3-43
3-26.	Oscilloscope Delay Distortion Measurement Controls.	3-45
3-27.	Signal Impairment Display (SID) Waveforms	3-48
3-28.	Signal Impairment Display (SID) Alignment Controls.	3-49
3-29.	X-Y Recording Initial Setup Controls.	3-50
3-30.	X-Y Recording, X-Axis and Y-Axis Calibration, and	

Figure	Title	Page
3-30. (Cont.)	Attenuation Distortion Controls	3-51
3-31.	X-Y Recording, Attenuation Distortion, and Delay Distortion Controls	3-53
3-32.	Level, Frequency, and P/AR Self-Check Controls.	3-55
3-33.	Oscilloscope Display Self-Check Controls.	3-56
3-34.	Noise, Phase Jitter, Nonlinear Distortion, Envelope Delay, and Hit Measurement Self-Check Controls	3-57
3-35.	Four-Tone Pattern	3-58
4-1.	Transmitter Circuits, Simplified Block Diagram	4-1
4-2.	Receiver Circuits, Simplified Block Diagram.	4-2
4-3.	Mainframe, Simplified Block Diagram	4-7
5-1.	Model 520B2 with Top Cover Removed	5-13
5-2.	Installation of Foam Rubber Padding on Cathode-Ray Tube.	5-15
5-3.	Model 520B2-07/17 with Top Cover Removed	5-16
6-1.	Universal Test System	6-3
6-2.	Model 520B2 Plug-In	6-5
6-3.	Enclosure Assembly 1A1.	6-7
6-4.	Front Panel Assembly 1A1A1.	6-10
6-5.	Front Panel Display Circuit Card Assembly 1A1A1A1	6-15
6-6.	Termination Circuit Card Assembly 1A1A1A2.	6-17
6-7.	Integration Thumbwheel Circuit Card Assembly 1A1A1A3	6-19
6-8.	Preamplifier and Mode Select Circuit Card Assembly 1A1A1A4.	6-22
6-9.	Vertical Interconnect Circuit Card Assembly 1A1A1A5	6-24
6-10.	Rear Panel Assembly 1A1A2	6-26
6-11.	Interconnect Circuit Card Assembly 1A1A3.	6-28
6-12.	Repeat and Transmit Function Circuit Card Assembly 1A2.	6-32
6-13.	Noise Detector Circuit Card Assembly 1A3	6-37
6-14.	A/D Converter Circuit Card Assembly 1A4	6-42
6-15.	Phase Jitter Circuit Card Assembly 1A5.	6-47
6-16.	Phase AGC Circuit Card Assembly 1A6.	6-51
6-17.	Nonlinear Distortion Circuit Card Assembly 1A7	6-55
6-18.	Data Accumulator Circuit Card Assembly 1A8	6-58
6-19.	Data and Display Control Circuit Card Assembly 1A9	6-61
6-20.	Modulator Circuit Card Assembly 1A10	6-66
6-21.	Sweep and VCO Circuit Card Assembly 1A11.	6-72
6-22.	Integration and Hits Process Circuit Card Assembly 1A12	6-76
6-23.	Autoranging and TLP Circuit Card Assembly 1A13.	6-79
6-24.	Fade Out Circuit Card Assembly 1A14	6-82
6-25.	Digital Event Buffers Circuit Card Assembly 1A15 (Used on Model 520B2-07)	6-84
6-26.	P/AR Generator and Receiver Circuit Card Assembly 1A15 (Used on Model 520B2-17)	6-88
6-27.	Model 500B Mainframe.	6-90
6-28.	Rear Panel Assembly 2A1	6-92
6-29.	Power Supply Assembly 2A1A1	6-94
6-30.	Power Supply Circuit Card Assembly 2A1A1A1.	6-97
6-31.	Wiring Harness 2A1A2	6-99
6-32.	Enclosure Assembly 2A2	6-101
6-33.	CRT Power Supply Circuit Card Assembly 2A3	6-103

Figure	Title	Page
6-34	CRT Deflection Circuit Card Assembly 2A4	6-107
6-35.	Random Access Memory Circuit Card Assembly 2A5	6-110
FO-1	Model 52082 Plug-In Without P/AR (Part of 52082-07), Overall Diagram	
FO-2	Model 52082 Plug-In With P/AR (Part of 52082-17), Overall Diagram	
FO-3	Front Panel Display Circuit Card 1A1A1A, Schematic Diagram	
FO-4	Termination Circuit Card 1A1A1A2, Schematic Diagram	
FO-5	Integration Thumbwheel Circuit Card 1A1A1A3, Schematic Diagram	
FO-6	Preamplifier and Mode Select Circuit Card 1A1A1A4, Schematic Diagram	
FO-7.	Repeat and Transmit Function Circuit Card 1A2, Schematic Diagram	
FO-8.	Noise Detector Circuit Card 1A3, Schematic Diagram	
FO-9.	A/D Converter Circuit Card 1A4, Schematic Diagram	
FO-10.	Phase Jitter Circuit Card 1A5, Schematic Diagram	
FO-11.	Phase AGC Circuit Card 1A6, Schematic Diagram	
FO-12.	Nonlinear Distortion Circuit Card 1A7, Schematic Diagram	
FO-13.	Data Accumulator Circuit Card 1A8, Schematic Diagram	
FO-14.	Data and Display Circuit Card 1A9, Schematic Diagram	
FO-15	Modulator Circuit Card 1A10, Schematic Diagram	
FO-16	Sweep and VCO Circuit Card 1A11, Schematic Diagram	
FO-17.	Integration and Hits Processing Circuit Card 1A12, Schematic Diagram	
FO-18.	Autoranging and TLP Circuit Card 1A13, Schematic Diagram	
FO-19.	Fade Out Circuit Card 1A14, Schematic Diagram	
FO-20.	Digital Event Buffers Circuit Card 1A15, Schematic Diagram	
FO-21.	P/AR Generator and Receiver Circuit Card 1A15, Schematic Diagram	
FO-22.	Model 5008 Mainframe, Overall Diagram	
FO-23.	Power Supply Circuit Card 21A1A1A1, Schematic Diagram	
FO-24.	CRT Power Supply Circuit Card 2A3, Schematic Diagram	
FO-25.	CRT Deflection Circuit Card 2A4, Schematic Diagram	
FO-26.	CRT Random Access Memory Circuit Card 2A5, Schematic Diagram (Sheet 1 of 2)	
FO-26.	CRT Random Access Memory Circuit Card 2A5, Schematic Diagram (Sheet 2 of 2)	

*FO-27 THROUGH FO-28 ARE IN THE ADDENDUM

FO-27.	Model 52083 PCB Assembly Sweep and VCO Board. (Part of 52083-17) Schematic Diagram (1 of 2)	
FO-27.	Model 52083 PCB Assembly Sweep and VCO Board. (Part of 52083-17) Schematic Diagram (2 of 2)	
FO-28.	Model 52083 Sweep and VCO Board. (Part of 52083-17) Schematic Diagram (1 of 3)	
FO-28.	Model 52083 Sweep and VCO Board. (Part of 52083-17) Schematic Diagram (2 of 3)	
FO-28.	Model 52083 Sweep and VCO Board. (Part of 52083-17) Schematic Diagram (3 of 3)	

LIST OF TABLES

Number	Title	Page
1-1	Specifications	1-2
1-2	P/AR Spectrum.	1-6
2-1	Mating Connector Data	2-2
3-1	Test Frequencies in LOCK Mode	3-20
5-1	Test Equipment Required.	5-2
5-2	Receiver Delay Test.	5-6
5-3	DC Power Supply Voltage Data	5-17
5-4	Troubleshooting Reference Information.	3-22
5-5	Troubleshooting.	5-24
5-6	Enclosure Assembly 1A1 Wire List	5-35
5-7	Front Panel Assembly 1A1A1 Wire List.	5-36
5-8	Vertical Interconnect Circuit Card 1A1A1A5 Wire List	5-39
5-9	Rear Panel Assembly 1A1A2 Wire List.	5-49
5-10	Interconnect Circuit Card 1A1A3 Wire List.	5-50
5-11	Mainframe Wire List.	5-62
5-12	Rear Panel Assembly 2A1 Wire List	5-62
5-13	Wiring Harness 2A1A2 Wire List	5-63

WARRANTY

Products manufactured by Halcyon Communications, Inc., are guaranteed to be free of defects in materials and workmanship for a period of one year from the date of shipment. Halcyon will accept returned items, transportation prepaid to the nearest Service Center, for repair during the warranty period at no cost to the customer, provided that the products have not been subjected to improper installation, accident, misuse, neglect or unauthorized alterations.

Halcyon Communications, Inc., certifies that all instruments are thoroughly tested and inspected and found to meet published specifications when shipped from the factory.

SAFETY PRECAUTIONS

1. Extremely dangerous voltage potentials are exposed when cover panels are removed from this equipment. Be certain to unplug mainframe power cable before performing cleaning and inspection routines.

2. Use a protective face mask and work gloves when removing and replacing the crt.

3. Extremely dangerous voltages, capable of causing death or serious injury, are present on CRT Power Supply Circuit Card 2A3, edge connector 2A1A2J3, and crt socket 2A1A2J6; see figure 5-3. When working with the high voltages associated with the crt power supply, observe all safety precautions.

Figure 1-1. Universal Test System Models 520B2-07 and 520B2-17

CHAPTER 1

DESCRIPTION

1-1. INTRODUCTION. This manual contains operation and maintenance instructions with parts breakdown for Halcyon Models 520B2-07, 520B2-17, 520B3-07 and 520B3-17 Universal Test System. The Models 520B2-17 and 520B3-17 include P/AR (Peak-to-Average Ratio) measurement capability, while the Models 520B2-07 and 520B3-07 do not; otherwise the systems are identical. Throughout the manual the designations 520B2 and 520B2-07/17 will be used to denote applicability to all systems including 520B3, unless otherwise noted.

1-2. PURPOSE OF EQUIPMENT. The 520B2-07/17 Universal Test System is a multifunction instrument designed to measure circuit parameters which affect voice-band data transmission. Measurement capabilities include the following parameters:

a. Level

b. Frequency.

c. Idle channel noise.

d. Noise-with-tone.

e. Noise-to-ground.

f. Phase jitter.

g. Impulse noise.

h. Phase hits.

i. Gain hits.

j. Dropouts.

k. Nonlinear distortion.

m. Frequency response.

n. Delay distortion.

1-3. DESCRIPTION OF EQUIPMENT. (See figure 1-1.) The 520B2-07/17 consists of a Model 520B2 Plug in module installed in a Model 500B Mainframe.

a. Model 520B2 Plug-In. The operating modes of the plug-in module are selected by a single set of controls which configures both the transmitter and receiver. The mode is indicated by a LED cursor, while separate LEDs show the transmitter function. An internal frequency counter may be used to measure either transmit or receive frequency. This counter has a rapid update cycle to provide accurate visual tracking when making response measurements.

The 520B2 has the facility for repeating the amplitude and delay variations detected on the far end receive line back to the transmitting unit. This makes it possible lto perform delay distortion and frequency response measurements for the forward line, as well as the return line, from one location.

Delay distortion measurements using the Nyquist technique normally require a reference line to maintain phase synchronization. The 520B2 is equipped with an oscillator and synchronizing control which permits the "receiving" instrument oscillator to be precisely matched to the frequency of the "transmitting" instrument. This makes accurate delay distrotion measurements possible on two-wire circuits where a separate forward/return reference circuit is not available.

Dial, hold, and transfer switching is provided for testing two-wire, loop-dial circuits. A single hold coil associated with the TRANSMIT jack is provided. The receiver/transmitter may be interchanged behind this circuitry.

Auxiliary outputs of all hit registers, the phase jitter frequency, and the X-Y analog display are provided on a 24-pin connector at the rear of the instrument.

b. Model 500B Mainframe. The Model 500B is an oscilloscope mainframe which provides a crt display of signals generated by the 520B2 unit. Incoming data can be stored in a dual memory which separates information from different test functions, as desired. The stored data can then be displayed any time after input signal storage occurs. This data may consist of either (or both) amplitude response and envelope delay information. The oscilloscope also provides a visual indication that the distortion tones are being received properly. A signal impairment display (SID) is present whenever a "1004 Hz" mode is selected. This Lissajous pattern visually shows many impairments to the received signal.

In addition to the basic crt display function, the 500B provides balanced analog signal outputs at the rear panel. These are derived from the horizontal and vertical display signals and can be used to drive an X-Y chart recorder.

The 500B Mainframe supplies power (+15 Vdc, -15 Vdc, and +5 Vdc) to the associated 520B2 Plug-In through a 44-pin connector located in the plug-in compartment.

1-4. PERFORMANCE CHARACTERISTICS. Performance characteristics of the 520B2-07/17 are provided in table 1-1.

1-5. ACCESSORIES SUPPLIED. The Model 520B2-07/17 is supplied with the following accessories:

a. Graticule Overlay Kit (Halcyon PN 9000-1061-00).

b. Power Cord, 3-conductor, 8-foot (Halcyon PN 6001-5303-00).

1-6. OPTIONAL ACCESSORIES. The following optional accessories are available.

a. Rack Mounting Kit (Halcyon PN 8220-2026-06). This kit, when assembled to the 520B2-07/17, allows mounting in a standard 19-inch rack.

b. Noise-to-Ground Adapter (Halcyon PN 8220-0003-90). The adapter facilitates measurement of noise-to-ground parameters in accordance with the requirements of Bell Systems Publication 41009.

c. Extender Board (Halcyon PN 8000-0071-00). This universal extender board permits all plug-in circuit card assemblies to be elevated for ease of troubleshooting and calibration.

Table 1-1. Specifications

TRANSMITTER	
Holding Tone Mode	Activated in Noise, Phase Jitter, and Hit Measurement Modes.
Frequency:	1004±0.1 Hz.
Distortion:	<60 dB.
Residual Jitter:	<0.1 degree.
Variable Oscillator	Activated in Amp Response, Delay, and Repeat Modes.
Frequency Range:	200 to 4000 Hz, single-frequency tone or modulated.

Table 1-1. Specifications — Continued

Modulation:	25 or 83-1/3 Hz.
Distortion:	Less than 50 dB, 200 to 3000 Hz; less than 40 dB, 200 to 4000 Hz. (Units with serial number 3999 and below have distortion typically less than 40 dB, 200 to 3000 Hz. A total harmonic distortion correction table is provided in Table 1-3.)"
Tuning:	Manual, single, or automatic sweep; continuous, or in 100.4-Hz steps, SF suppression.
Sweep Rate:	Variable.
Nonlinear Distortion	Activated in Nonlinear Mode only.
Normal:	Two tone-pairs. Centered at 860 Hz, 6 Hz separation; 1380 Hz, 16 Hz separation.
S/N Check:	One pair, increased 3 dB.
P/AR (520B2-17 only)	Activated in P/AR mode only.
P/AR Line Spectrum:	See table 1-2.
Line Spectrum Distortion:	Spurious frequencies to 400 Hz, 50 dB below power of 1890.625 reference component and 40 dB down above 4000 Hz.
Line Signal Stability:	Line signal period 64.0 msec ±0.1%.
Output:	
Range:	-39 to +9 dBm.
Impedance:	600 or 900 ohms.
RECEIVER	
Input	
Frequency Range:	200 to 4000 Hz.
Impedance:	Bridged, >25k ohms; terminated, 600 or 900 ohms.
Reference LEVEL IN Range:	-39 to +9 dBm.
Level Measurement	
Frequency Range:	200 to 4000 Hz.
Dynamic Range:	-50 to +9.9 dB.
Total Range:	-50 to +18.9 dBm.
Measurement Accuracy:	±0.1 dB at 1000 Hz from 0 to -20 dBm; ±0.2 dB, 200-4000 Hz from +9 to -40 dBm.
Display Resolution:	0.1 dB.
Noise Measurement	
Filter Weighting:	C-message or 3 kHz.

Table 1-1. Specifications — Continued

Notch:	-50 dB, 995 to 1025 Hz.
Dynamic Range:	20 to 99 dB.
Total Range:	20 to 108 dBrn.
Measurement Accuracy:	±1 dB.
Display Resolution:	1 dB.
TLP Correction:	Adjustable; factory set at 13 dB.
Noise-to-Ground Measurements	
Ring-to-Ground Impedance:	100k ohms.
Tip-to-Ground Impedance:	100k ohms.
Measurement Accuracy:	±1.5 dB.
Measurement Range:	50-130 dBrn.

NOTE

40 dB must be added to the measurement reading when using the adapter. See Noise Measurement section for additional specifications.

Envelope Delay	
Measurement Range:	±6 msec, 83-1/3 Hz; ±10 msec, 25 Hz.
Measurement Accuracy:	±5 usec (500-3200 Hz).
Two-Wire Operation:	Oscillator sync control.
Phase Jitter	
Holding Tone Range:	990 to 1030 Hz.
Jitter Bandwidth:	
STD	20 to 300 Hz.
STD + LF	4 to 300 Hz.
Measurement Range:	0 to 30 degrees.
Measurement Accuracy:	5% ±0.2 degrees.
Nonlinear Distortion*	
2nd Order, B±A:	520 and 2240 Hz (±17 Hz).
3rd Order, 2B-A:	1900 Hz (±23 Hz).
Measurement Range:	10 to 55 dB, 2nd; 10 to 55 dB, 3rd.
Measurement Accuracy:	±1 dB.
Display Resolution:	1 dB.

Table 1-1. Specifications — Continued

P/AR Measurements (520B2-17 only)	
Measurement Accuracy:	±2 P/AR units (30-110 P/AR); ±4 P/AR units (outside 30-110 P/AR).
Display Range:	0 to 120 P/AR units.
Display Resolution:	1 P/AR unit.
Hit Measurements	
Timer:	5 minutes, 15 minutes, or continuous.
Count Rate:	7 per second.
Count Range:	0 to 9999.
Phase Hit Threshold:	5 to 45 degrees, 5 degree steps.
Gain Hit Threshold:	±1 to ±6 dB.
Hit Duration:	4 usec or longer.
Dropout:	-12 dB for 4 msec.
Impulse Noise	
Weighting:	C-message or 3-kHz flat.
Impulse Threshold, 1st:	40 to 99 dBrn0 relative to LEVEL IN attenuator setting.
Impulse Threshold, 2nd:	+4 dB.
Impulse Threshold, 3rd:	+8 dB.
Total Impulse Noise Measurement Range:	20 dBrn to 110 dBrn.
AUXILIARY OUTPUTS	
Crt Display, Amp:	-15 to +5 dB, Normal; -6 to +2 dB, Expanded.
Crt Display, Delay:	-1000 to 3000 usec, Normal; -300 to 900 usec Expanded.
X-Y Plotter:	±2V full scale.
Event Counters (Hits):	+5V Normal, OV Hit (TTL interface).
LINE HOLDING	
Dial:	Jacks provided for handset with dial.
Hold:	300-ohm dc holding coil.
CATHODE-RAY TUBE	
Size:	5 in. diagonal.
Phosphor:	P-13.

Table 1-1. Specifications — Continued

POWER REQUIREMENTS:	115 or 230 Vac, 47 to 400 Hz, 90 watts.
GENERAL:	
Dimensions:	17 in. W x 7 in. H x 17-1/2 in. D.
Weight:	35 lb.
Environment:	0 to 50°C, 95% relative humidity.

*Licensed Under U.S. Patent 3,862,380.

Table 1-2. P/AR Spectrum

Frequency (Hz)	Line spectrum		Receiver		Test spectrum	
	Magnitude (dB)	Phase (deg)	Loss (dB)	Phase (deg)	Magnitude (dB)	Phase (deg)
140.625	-33.737	-173.73	50.498	173.73	-74.780	0.0
390.625	-15.881	-161.24	31.518	161.24	-37.945	0.0
640.625	-14.556	-143.95	20.377	143.95	-25.478	0.0
890.625	-15.181	-114.31	10.629	114.31	-16.355	0.0
1140.625	-16.303	- 55.37	2.112	55.37	- 8.960	0.0
1390.625	-11.937	30.19	0.610	- 30.19	- 3.092	0.0
1640.625	- 3.961	86.41	5.493	- 86.41	0.0	0.0
1890.625	- 0.000	113.78	10.505	-113.78	- 1.050	0.0
2140.625	- 0.438	128.62	14.520	-128.62	- 5.503	0.0
2390.625	- 3.104	137.78	17.741	-137.78	-11.390	0.0
2640.625	- 6.512	144.00	20.402	-144.00	-17.459	0.0
2890.625	-10.082	148.52	22.662	-148.52	-23.289	0.0
3140.625	-13.658	151.95	24.624	-151.95	-28.828	0.0
3390.625	-17.240	154.67	26.361	-154.67	-34.146	0.0
3640.625	-20.892	156.87	27.917	-156.87	-39.355	0.0
3890.625	-24.722	158.70	29.330	-158.70	-44.597	0.0

TABLE 1-3

CORRECTED TOTAL HARMONIC DISTORTION (THD): dBm0

WHEN USING 520B VARIABLE OSCILLATOR

AS A SOURCE FOR THD MEASUREMENT

520B THD. dB BELOW XMT POWER \ MEASURED THD: dBm0	-25	-26	-27	-28	-29	-30	-31	-32	-33	-34	-35	-36	-37	-38	-39
40	-25.1	-26.2	-27.2	-28.3	-29.4	-30.5	-31.6	-32.7	-34.0	-35.3	-36.7	-38.2	-40.0	-42.3	-45.9
41	-25.1	-26.1	-27.2	-28.2	-29.3	-30.4	-31.5	-32.6	-33.7	-35.0	-36.3	-37.7	-39.2	-41.0	-43.3
42		-26.1	-27.1	-28.2	-29.2	-30.3	-31.4	-32.5	-33.6	-34.7	-36.0	-37.3	-38.7	-40.2	-42.0
43			-27.1	-28.1	-29.2	-30.2	-31.3	-32.4	-33.5	-34.6	-35.7	-37.0	-38.3	-39.7	-41.2
44				-28.1	-29.1	-30.2	-31.2	-32.3	-33.4	-34.5	-35.6	-36.7	-38.0	-39.3	-40.7
45					-29.1	-30.1	-31.2	-32.2	-33.3	-34.4	-35.5	-36.6	-37.7	-39.0	-40.3
46						-30.1	-31.1	-32.2	-33.2	-34.3	-35.4	-36.5	-37.6	-38.7	-40.0
47							-31.1	-32.1	-33.2	-34.2	-35.3	-36.4	-37.5	-38.6	-39.7
48								-32.1	-33.1	-34.2	-35.2	-36.3	-37.4	-38.5	-39.6
49									-33.1	-34.1	-35.2	-36.2	-37.3	-38.4	-39.5

NOTES: 1. Measured THD greater than -30 dBm0 is equal to the corrected THD ±.1 dBm0

2. Blank table entries indicate that the measured THD equals the corrected THD ±.1 dBm0

3. Table accuracy is ±.1 dBm0

CHAPTER 2

INSTALLATION

2-1. UNPACKING AND INSPECTION. The equipment is shipped from the factory in an operational condition and is ready for use when received. When the shipment is received, check the shipping container for evidence of transportation damage or material shortages. If damage or shortages are found, or suspected, notify the transportation carrier directly, and the nearest Halcyon Communications Service Center for further instructions. Carefully read and follow any special instructions appearing on the outside of the shipping container. Unpacking and inspection of equipment should proceed in the following manner:

a. Carefully remove shipping bands, tape, staples, and other packaging materials from the outside of shipping container.

b. Remove and/or open top of shipping container. Carefully check container for any shipping damage.

c. Check inside/outside of container for packing list. Determine if contents of shipping container agree with packing list, and all items listed have been received.

d. Carefully lift equipment out of shipping container and place on bench. Check immediately for dents, scratches, damaged connectors and switches, etc.

2-2. PREPARATION FOR USE. The instrument should be installed and prepared for operation in accordance with the following instructions.

CAUTION

To prevent possible damage to the equipment make line voltage selection BEFORE connecting line power.

a. Power Requirements. A primary 115 or 230 Vac, 47 to 400 Hz, single-phase power source is required. The VOLTAGE SELECT slide switch (53, figure 3-1) on the rear of the mainframe selects the proper operating line voltage. The line power cord connection is made through a standard three-prong receptacle (55) located next to the VOLTAGE SELECT switch. Primary power circuit to the equipment is protected with a slow-blow fuse (54) rated at 1 ampere for 115-volt operation or 0.5 ampere for 230-volt operation. Be certain that the power cable is connected to a power outlet containing a protective grounded (earth) contact.

WARNING

This protection must not be negated by the use of a two-wire extension cord or plug adaptor which lacks a grounding feature.

b. Mating Signal Connectors. Mating connector information required for installation of this equipment is provided in table 2-1, with connector designations indicated in figure 3-1.

c. Preset PC Board-Mounted Switches. These switches, affecting certain test system parameters, are discussed in paragraph 3-3. The setting of these switches should be checked at time of installation to ensure proper conditions for operation.

d. Peak-to-Average Ratio (P/AR) Installation. There is no external physical difference between Models 520B2-07 and 520B2-17, although the latter has P/AR capability. To determine whether or not P/AR capability is

Table 2-1. Mating Connector Data

Instrument connector (figure 3-1)	Mating connector	
	Description	Suggested type
RECEIVE (2) TRANSMIT (36)	Telephone plug, 3 wire	Graybar AT310
DIAL (39) HDST (40)	Telephone plug, 2 wire	Graybar AT289B, AT327, AT396A
RECEIVE IN (49) TRANSMIT OUT (49) HORIZONTAL OUT (52) VERTICAL OUT (52)	Single conductor terminated with banana plug at each end	H.H. Smith 1860 or ITT Pomona 1985
PAR & COUNTS OUTPUTS (48)	24-pin cable connector	Amphenol 57-30240

included, remove the mainframe top cover and the plug-in cover, and check the part number identification stamped on the ejector tab, adjacent to the plug-in center divider, of circuit card 1A15; see figure 5-1. If the number is 0003-76, P/AR is installed; if the number is 0003-91, P/AR is not included.

NOTE

The two circuit cards are directly interchangeable, so that 0003-76 may be used to replace 0003-91 in order to incorporate P/AR.

Another method to check for P/AR capability is as follows (see figure 3-1):

(1) Depress POWER switch (42).

(2) Depress SELECT up or down switch (8) until P/AR indicator (9) lights.

(3) Set LEVEL IN (1) and LEVEL OUT (37) switches to 00.

(4) Set TRANSMIT FUNCTION switch (38) to NORM.

(5) Patch TRANSMIT jack (36) to RECEIVE jack (2).

(6) Display (13) should indicate 100±1 if P/AR is installed. Ignore any reading on FREQ Hz display (23).

NOTE

Refer to Chapter 3 for complete description of controls and operating techniques.

e. Mounting Configurations. The 500B Mainframe is designed to be either bench- or rack-mounted. When the equipment is to be mounted in a 19-inch rack, install rack adaptor kit, Halcyon PN 8220-2026-06, as shown in figure 2-1. The bail and mounting feet on the bottom of the mainframe are normally removed when the instrument is rack-mounted.

2-3. INCOMING PERFORMANCE INSPECTION. An incoming performance inspection, consisting of the self-check procedures described in paragraph 3-8, should be made to ascertain that the equipment was operational as received.

2-4. STORAGE AND RESHIPMENT. Environmental conditions during storage and shipment should be limited to a maximum temperature of 185°F (85°C) and a minimum temperature of -40°F (-40°C).

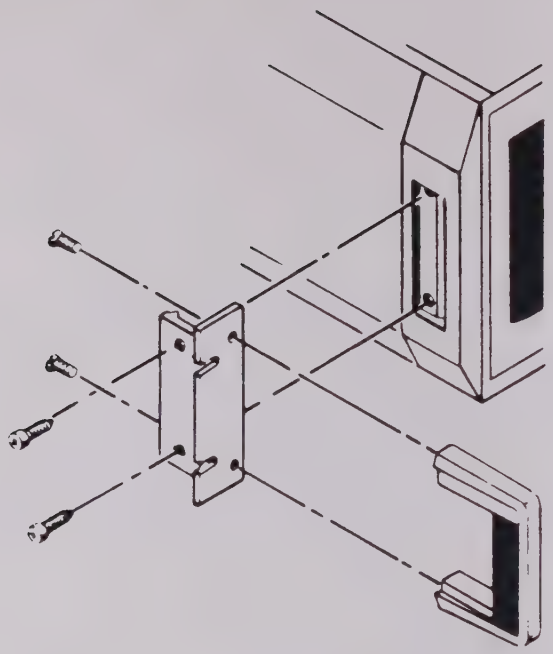

Figure 2-1. Rack Adaptor Kit Installation

The equipment may be prepared for storage or transportation by one of several methods. A shipping trunk (Halcyon PN 1403-0001-00) is recommended for transporting the instrument via common carrier, or a field case (Halcyon PN 8500-0500-00) is available for general protection of the test system during periods of handling and field use.

CAUTION

Do not ship the test system by common carrier while installed in a Halcyon field case; damage to the equipment may result.

The test system can also be repacked in the original shipping container (if available) or with other commercially available materials as follows:

a. Use the original shipping container designed for the equipment; otherwise, a strong crate or carton to provide adequate protection.

b. Wrap the equipment in heavy paper or plastic before placing it in the shipping container.

c. Completely fill area around the equipment with shock-absorbing material; protect delicate panel surfaces with extra sheets of cardboard.

d. Seal the shipping container with strong tape or metal bands and attach a packing list to an outside surface. Also, on the outside surfaces, mark FRAGILE-DELICATE INSTRUMENT.

CHAPTER 3

OPERATION

3-1. INTRODUCTION. Operating procedures for Model 520B2-07/17 Universal Test System are detailed in this chapter. Included in the discussion is information relating to front-panel controls, connectors, and indicators; rear-panel controls and connectors; internal preset switches; turn-on/ initial set-up procedures; measurement procedures; and operator self-check procedures.

3-2. DESCRIPTION OF CONTROLS. Front- and rear-panel controls, connectors, and indicators are functionally described in this section and are shown on figure 3-1. Additional figure references throughout the discussion are provided

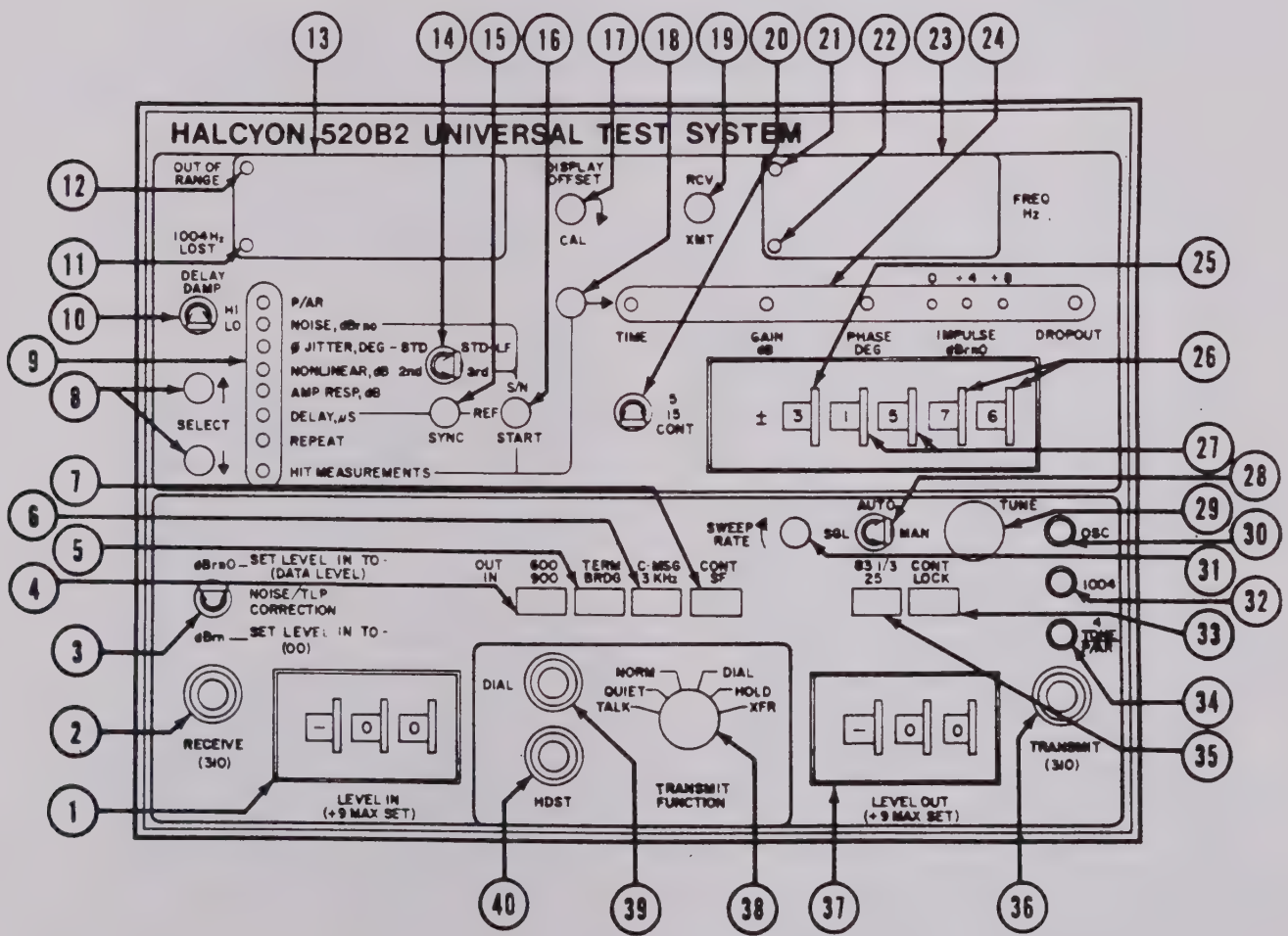

MODEL 520B2 FRONT PANEL

Figure 3-1. Controls, Connectors, and Indicators (Sheet 1 of 2)

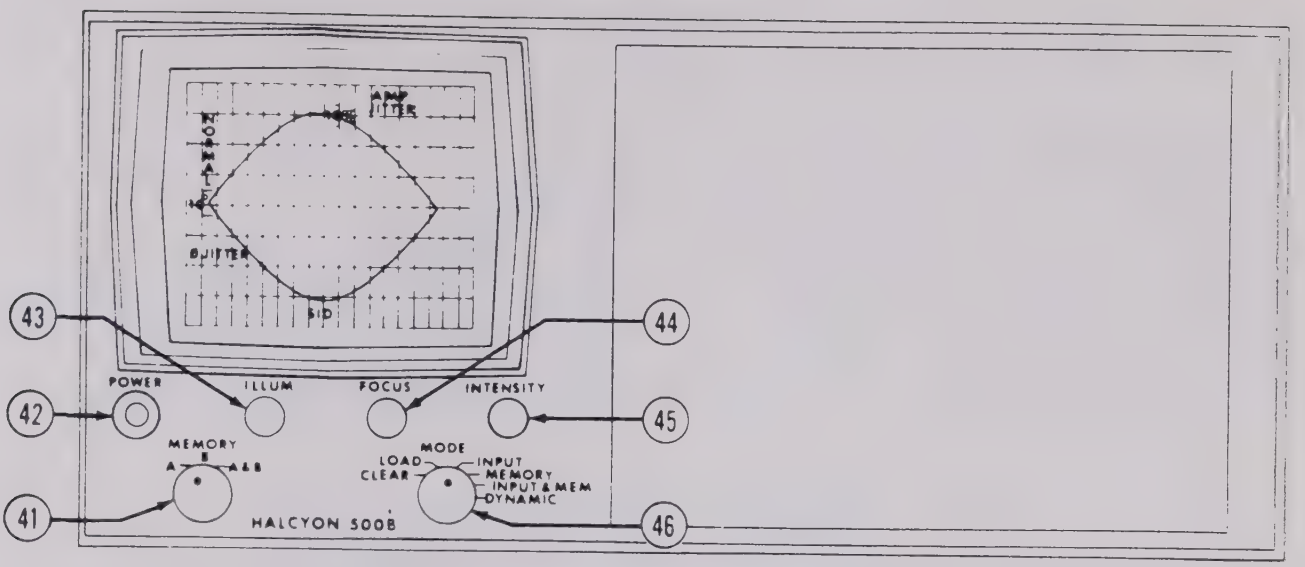

MODEL 500B FRONT PANEL

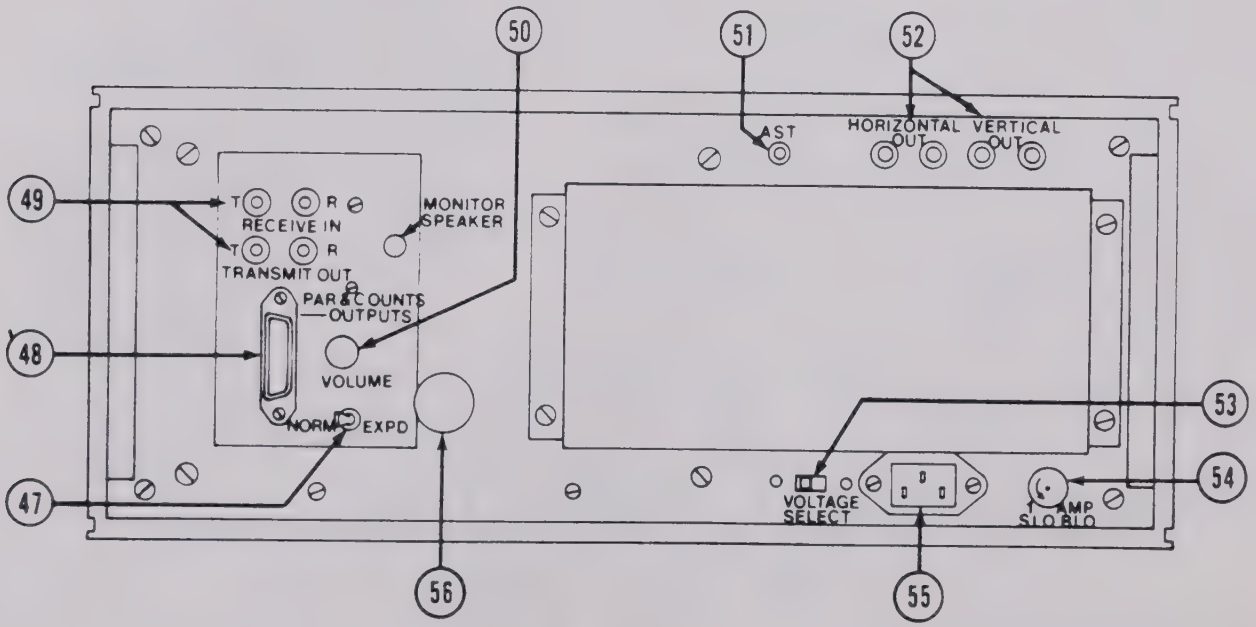

REAR PANEL

Figure 3-1. Controls, Connectors, and Indicators (Sheet 2 of 2)

to the operator so that various features mentioned in the text can be quickly located and identified.

The test system operating controls may be grouped into six categories:

Mode selection.

Receiver controls.

Transmitter controls.

Display controls

Mainframe front-panel controls.

Rear-panel controls and connectors.

a. Mode Selection. The measurement mode of the instrument is selected by means of the mode SELECT up or down pushbuttons (8) which automatically configure both the receiver and the transmitter. The mode indicator LEDs (9) provide a visual indication of which of the following parameters are being measured.

NOTE

The P/AR mode is provided only in Model 520B2-17.

(1) P/AR. (See figure 3-2.) In the P/AR (Peak-to-Average Ratio) mode the transmitter generates a precisely controlled complex signal format of known peak-to-average ratio which is applied to the circuit under test. The P/AR test signal is distorted by impairments encountered during transmission over the circuit, resulting in changes to the signal peak-to-average ratio. The P/AR receiver measures the absolute peak and average values of the received P/AR signal and displays the ratio on a zero-suppressed scale (13). A P/AR rating of 100 signifies no signal degradation.

(2) NOISE. (See figure 3-2.) In this mode, the transmitter generates a precise 1004.0-Hz tone of low distortion for use as a holding tone in making noise-with-tone (notched noise) measurements. After transmission through the circuit under test, the received signal is passed through a notched weighting network and measured by a quasi-rms detector. The resulting noise measurement is displayed as an absolute dBrn or a relative dBrn0 value, depending upon the LEVEL IN attenuator (1) setting and the position of the NOISE/TLP CORRECTION switch (3). By depressing the S/N-REF-START pushbutton switch (16), the 1010-Hz notch filter is disabled, and the level of the holding tone is measured and displayed in the same dBrn/dBrn0 units as used for the noise measurement. By subtracting the noise reading from the tone reading, the signal-to-noise ratio may be conveniently derived with minimum computation.

(a) Noise measurements are normally made with C-message weighting, whether the holding tone is present or not. If a holding tone is not present, the measurement is designated idle channel noise. Both noise-with-tone and idle-channel noise measurements may be made with 3-kHz flat weighting by latching the C-MSG/3 KHz pushbutton switch (6) in the IN position.

NOTE

Special precautions should be taken to return the C-MSG/3 KHz pushbutton switch to the normal OUT position upon completion of a 3-kHz flat weighting measurement, to insure that subsequent noise measurements are made using the normal C-message weighting network.

(b) Noise measurements may be made in terms of an absolute dBrn value by setting the LEVEL IN attenuator (1) to the 00 position and placing the NOISE/TLP CORRECTION switch (3) in the dBrn (down) position. If a relative dBrn0 measurement is desired, the LEVEL

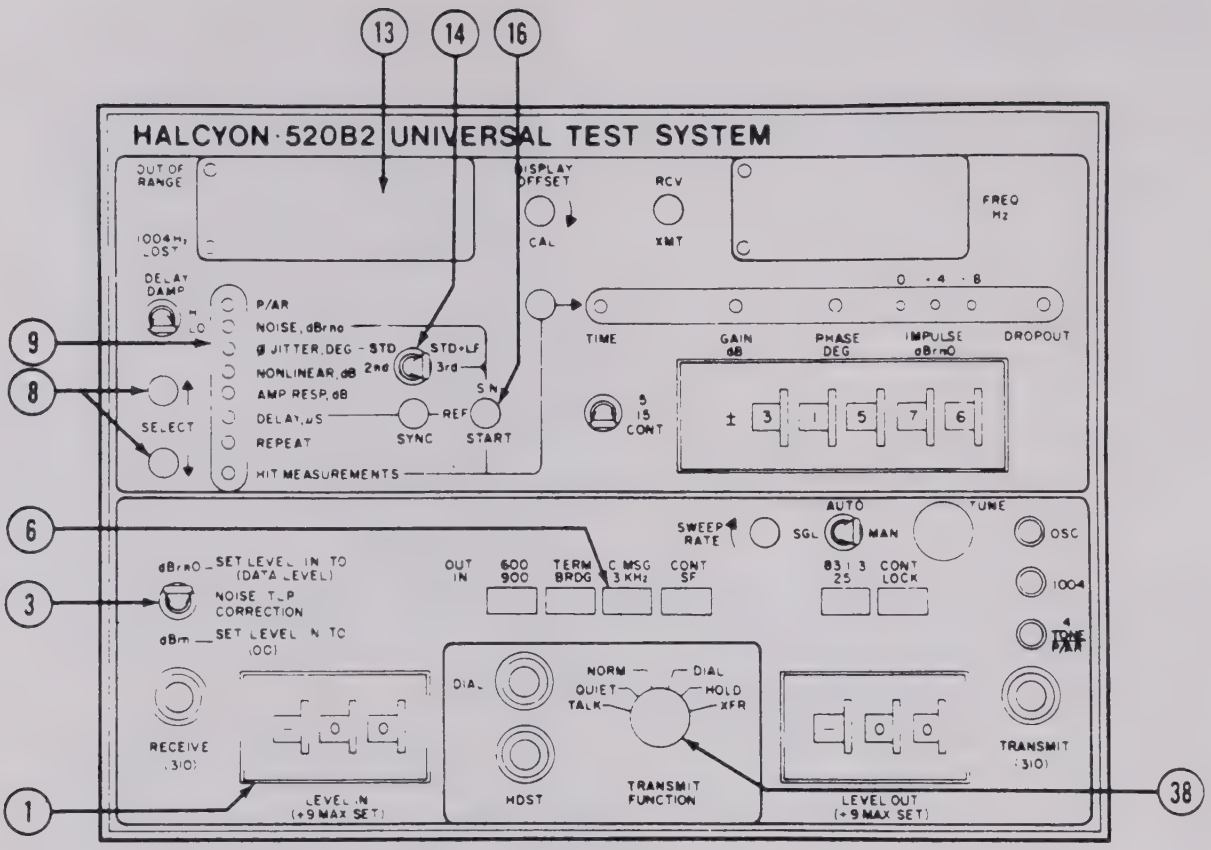

Figure 3-2. P/AR, NOISE, Ø JITTER, and NONLINEAR Mode Selection Controls

IN attenuator should be set to normal data level, or 13 dB below the TLP value, and the NOISE/TLP CORRECTION switch should be placed in the dBrn0 (up) position).

(c) Idle-channel noise measurements may be made when there is no 1004-Hz holding tone on the circuit being tested. The transmit output signal is conveniently disabled by placing the TRANSMIT FUNCTION switch (38) in the QUIET position.

(3) Ø JITTER. (See figure 3-2.) In the phase-jitter mode, a 1004-Hz tone is transmitted and peak-to-peak phase changes of the received holding tone are measured and displayed directly in degrees peak-to-peak. Standard (20 Hz to 300 Hz) or Standard Plus Low Frequency (4 Hz to 300 Hz) jitter components are displayed, depending on the position of the STD/STD+LF switch (14).

(4) NONLINEAR. (See figure 3-2.) In this mode, the transmitter generates two tone-pairs centered at 860 Hz and 1380 Hz. After transmission over the circuit under test, any resulting 2nd-order and 3rd-order distortion products are measured and displayed in dB (13) as a ratio relative to the composite rms value of the received dual tone-pair test signal.

(a) 2nd- or 3rd-order distortion measurements are displayed depending on the position of the 2nd/3rd toggle switch (14).

(b) The S/N-REF-START push-button switch (16) disables the transmitted upper frequency tone pair and increases the level of the remaining pair by 3 dB. This feature is used to check the magnitude of noise contribution in the measurement.

(5) AMP RESP. (See figure 3-3.) In this mode, the variable-frequency oscillator is activated and applied to the TRANSMIT output jack (36). The measurement circuitry is configured as a flat level meter. Measurement is made and displayed (13) to a resolution of 0.1 dB relative to the setting of the LEVEL IN attenuator (1).

(a) Absolute level measurements with readout displayed directly in dBm can be made by setting the LEVEL IN attenuator (1) to the 00 position.

(b) Relative dBm0 level measurements are made by setting the LEVEL IN attenuator (1) to the TLP value for the point of measurement. dBm0 measurements may be made for TLPs from +9 dBm down to -39 dBm.

(c) Level measurements can also be made with results displayed in terms of deviation from the expected measurement level (EML) by setting the LEVEL IN attenuator (1) to the value of the expected test-tone level. This will normally be 13 dB below the TLP value for the point of measurement.

(d) The AMP RESP mode is used for both standard level measurements and for frequency response measurements. Most level measurements, including 1000-Hz loss tests, are normally made with the variable-frequency oscillator (29) tuned to 1004 Hz.

(e) Frequency response tests are normally made with the display (13) showing deviations relative to received test-tone levels at a reference frequency of 1004 Hz. For this case, the LEVEL IN attenuator (1) should be set to within the nearest dB value of the received 1004-Hz test tone. The DISPLAY

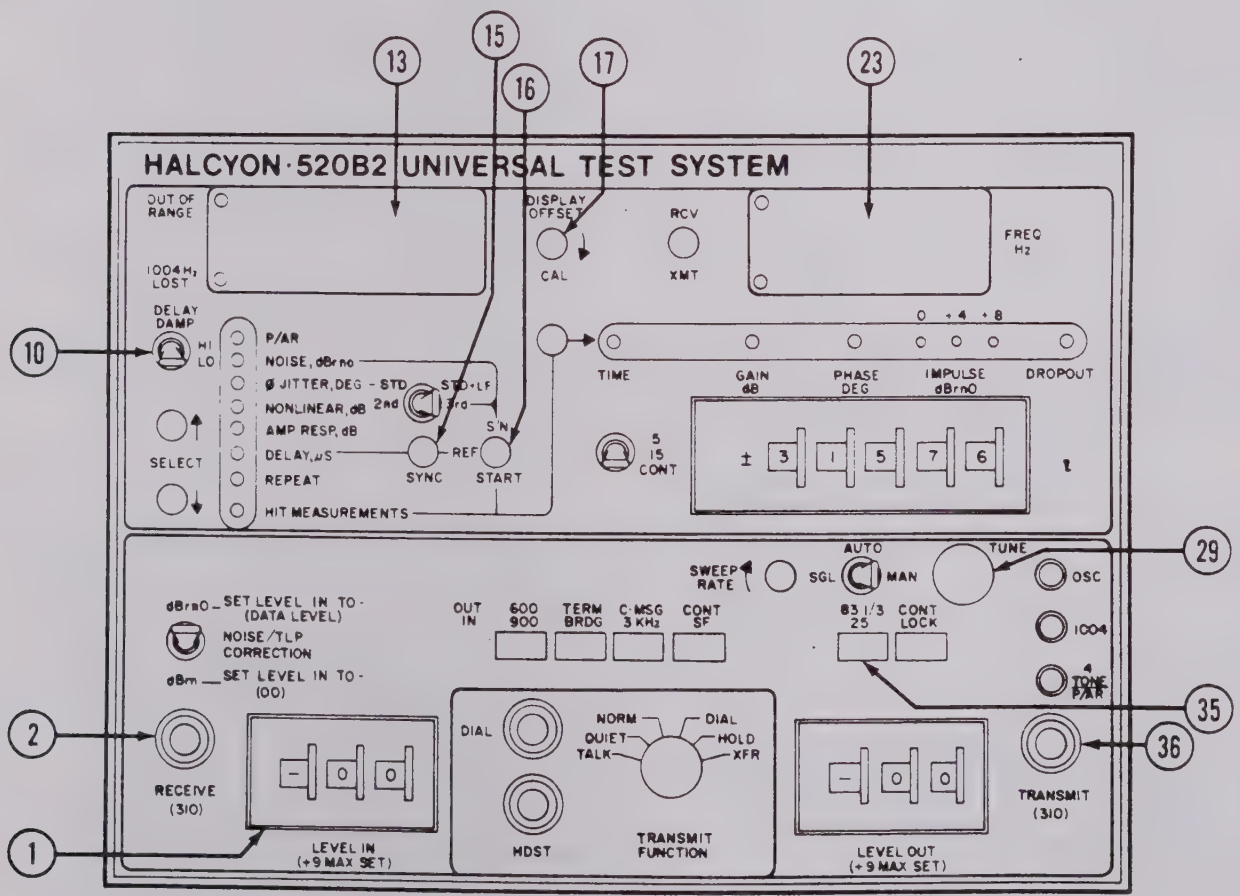

Figure 3-3. AMP RESP, DELAY, and REPEAT Mode Selection Controls

OFFSET control (17) is then used to set the display reading to exactly 0.0 dB relative to this reference. Frequency response measurements can then be made over the frequency range of 200 Hz through 4000 Hz, with direct measurement readout of deviation relative to the 1004-Hz reference frequency.

NOTE

The DISPLAY OFFSET control (17) affects measurement accuracy for NOISE, NONLINEAR, and AMP RESP level measurements. It is important that this control be returned and maintained in the full clockwise CAL position for these measurements.

(6) DELAY. (See figure 3-3.) In this mode, the variable-frequency oscillator is activated as the transmitter output, with the signal being 50-percent amplitude modulated. The modulation frequency is 25 Hz or 83-1/3 Hz, depending upon the position of pushbutton switch (35). After transmission over the circuit under test, the phase of the demodulated 25 Hz or 83-1/3 Hz envelope of the received signal is compared to the phase of the internal modulation reference. The relative phase difference between these two signals is measured and the results displayed (13) to the nearest microsecond.

(a) The S/N-REF-START pushbutton switch (16) sets the measurement circuitry and readout to zero when momentarily depressed. This permits delay measurements to be referenced to the delay at a specific test frequency, typically 1804 Hz.

(b) The DELAY DAMP toggle switch (10) provides means for averaging rapid fluctuations in the display reading resulting from excessive noise on the circuit under test. The normal position for this switch is the LO position. The HI position will provide steadier readings on noisy circuits.

(c) The SYNC potentiometer (15) is used to fine tune the internal modulation reference to the exact frequency of the far-end modulating source on two-wire circuits, or where it is not practical to use the normal return/forward reference operational mode.

(7) REPEAT. (See figure 3-3.) In this mode, the variable-frequency oscillator is activated as the transmitter output. If the signal applied to the RECEIVE jack (2) is amplitude modulated by either 25 Hz or 83-1/3 Hz, the modulation envelope is extracted and used to modulate the transmitter output signal. If the RECEIVE input signal is an unmodulated single-frequency tone, its relative received level is used to control the relative level of the transmitter output. The proper application of these two modes of repeat operation makes it possible to perform far-end to near-end and near-end to far-end delay distortion and frequency-response measurements, with measurement readout for both directions of transmission being provided at the companion test system at the other end of the circuit under test. When operated in the repeat mode, the primary display (13) functions only as a level measurement readout for the signal applied to the RECEIVE jack. The FREQ Hz display (23) may be used to monitor the frequency of either the input or output signal.

(8) HIT MEASUREMENTS. (See figure 3-4.) In this mode, the 1004-Hz holding tone is activated as the transmitter output and the receiver monitors the incoming signal to measure transient variations in gain, phase, impulse noise, and signal dropouts. Individual registers are incremented to count transients of these parameters which exceed respective preset thresholds. Seven four-decade count registers are provided, one to count elapsed test time in minutes and the others for specified hit functions, including three specified impulse noise thresholds.

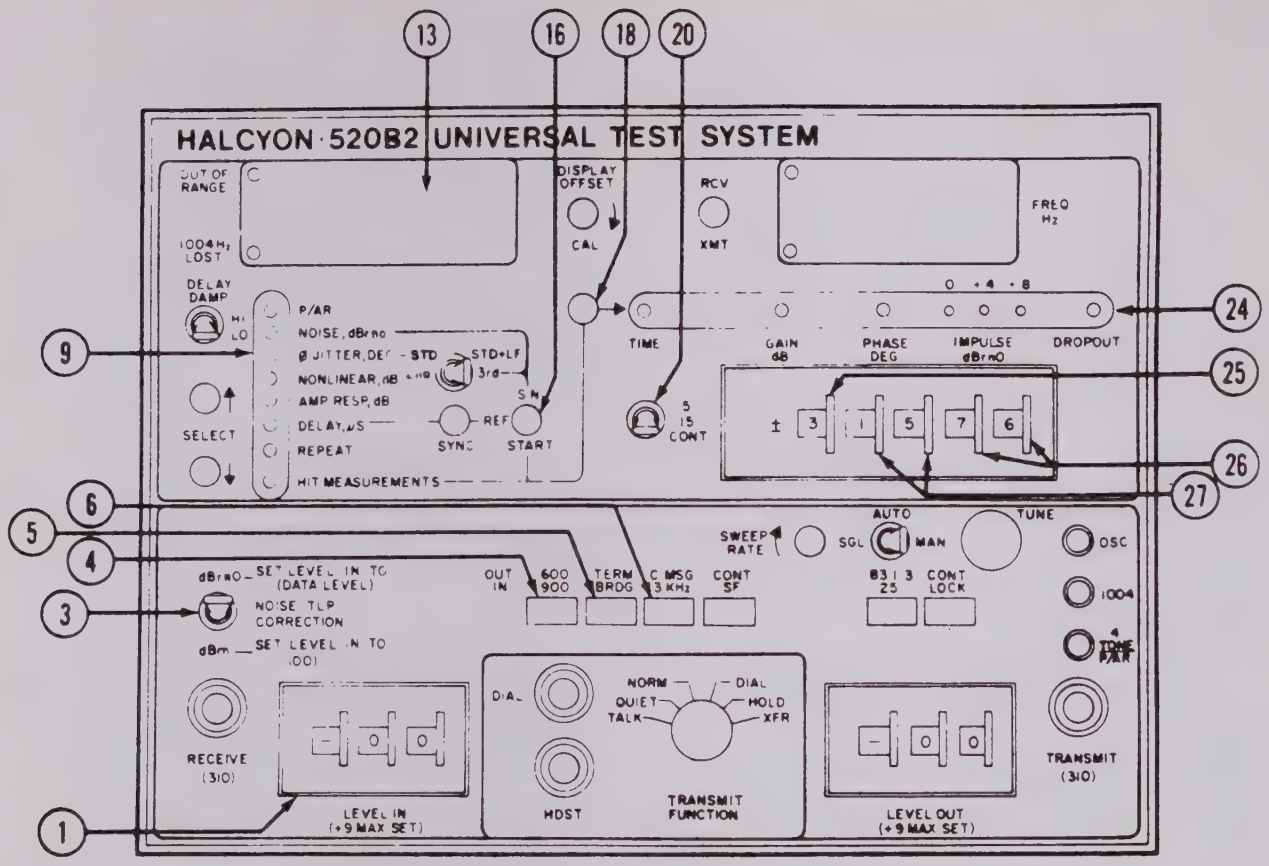

Figure 3-4. HIT MEASUREMENTS, LEVEL IN, NOISE/TLP CORRECTION, 600/900, TERM/BRDG, and C-MSG/3 KHz Control Groups

(a) The S/N-REF-START pushbutton switch (16) clears all count registers and initiates the test period.

(b) The length of the test period is controlled by 3-position 5/15/CONT toggle switch (20) which activates the count registers for either a five- or fifteen-minute test period or enables the counting circuitry on a continuous basis.

(c) The cumulative count for each register may be displayed on the primary display readout (13) by sequentially depressing pushbutton switch (18). The respective count register being monitored on the display is identified by the LEDs in the hit measurements indicator (24).

(d) The hit thresholds for gain hits, phase hits, and impulse noise are controlled by three sets of digital thumbwheel switches located directly under the hit measurements indicator. The threshold for the dropout parameter is internally preset to a fixed value of 12 dB below the LEVEL IN attenuator (1) setting. Available threshold settings for the test parameters are:

TIME (20)	5 minutes, 15 minutes or continuous
GAIN (25)	±1 dB to ±6 dB in 1-dB increments (peak value)
PHASE (27)	5 degrees to 45 degrees in 5-degree increments (peak value)

IMPULSE (26)	40 dBrn0 to 99 dBrn0 in 1-dB increments. This threshold value is relative to the LEVEL IN attenuator (1) setting and the NOISE/TLP CORRECTION switch (3) position.

b. Receiver Controls.

(1) LEVEL IN (1, figure 3-4). The LEVEL IN thumbwheel switch constitutes a step attenuator which controls the signal level presented to the receiver for all measurements. This attenuator has an overall adjustment range of 48 dB with values indicated in 1-dB increments from +9 to -39. For level measurements in the AMP RESP mode, a dynamic measurement range of +9.9 dB to -50 dB is provided relative to the setting of the LEVEL IN attenuator, with the dynamic measurement value displayed on the primary display (13) to a resolution of 0.1 dB. The instrument is calibrated so that the indicated values on the LEVEL IN attenuator correspond to a measurement reference range of +9 dBm to -39 dBm.

(2) NOISE/TLP CORRECTION (3, figure 3-4). This switch is operative during NOISE and IMPULSE NOISE measurements only, and serves to reference the test results to the TLP value when a relative dBrn0 measurement is desired. In normal practice, the LEVEL IN attenuator (1) is set to the expected measurement level (-13 dBm0 data level) at the point of measurement instead of the TLP value. The NOISE/TLP CORRECTION switch, when in the dBrn0 position, provides measurement compensation for the difference between the TLP value and the data level, typically 13 dB. The specific compensation value is a function of the setting of the internal PC mounted thumbwheel switch, as noted on the label located directly above the NOISE/TLP CORRECTION switch. When in the dBrn position, the NOISE/TLP CORRECTION switch has no effect; noise and impulse noise readings are referenced directly to the equivalent dBm value of the LEVEL IN attenuator setting.

(3) 600/900 (4, figure 3-4). This switch controls both the source impedance of the transmitter output and the calibration impedance of the receiver measurement circuitry. It is used also in conjunction with the TERM/BRDG switch (5) to provide either a 600-ohm or 900-ohm input impedance for terminated measurements.

(4) TERM/BRDG (5, figure 3-4). This switch controls the impedance of the receiver input. In the TERM position, the input impedance is 600 ohms or 900 ohms depending upon the position of 600/900 switch (4). When in the BRDG position, the input impedance is increased to approximately 25,000 ohms to facilitate bridging-type measurements on circuits already terminated.

(5) C-MSG/3 KHz (6, figure 3-4). This switch provides a selection of either C-message or 3-kHz flat weighting for both noise and impulse noise measurements. Both weighting networks are operated with the 1010-Hz notch filter (995 Hz to 1025 Hz) in tandem, except when the S/N-REF-START pushbutton (16) is depressed to disable the notch.

(6) S/N-REF-START (16, figure 3-5). This switch performs several specific functions, depending upon the selected mode as indicated by mode indicator (9). The various functions are described below for each applicable operating mode.

(a) NOISE. In this mode, depressing pushbutton switch (16) effectively disables the 1010-Hz notch filter.

(b) NONLINEAR. For nonlinear tests, depressing pushbutton switch (16) disables the upper frequency transmitted tone pair and increases the level of the remaining lower frequency tone pair by precisely 3 dB. This operation maintains the rms power output of the

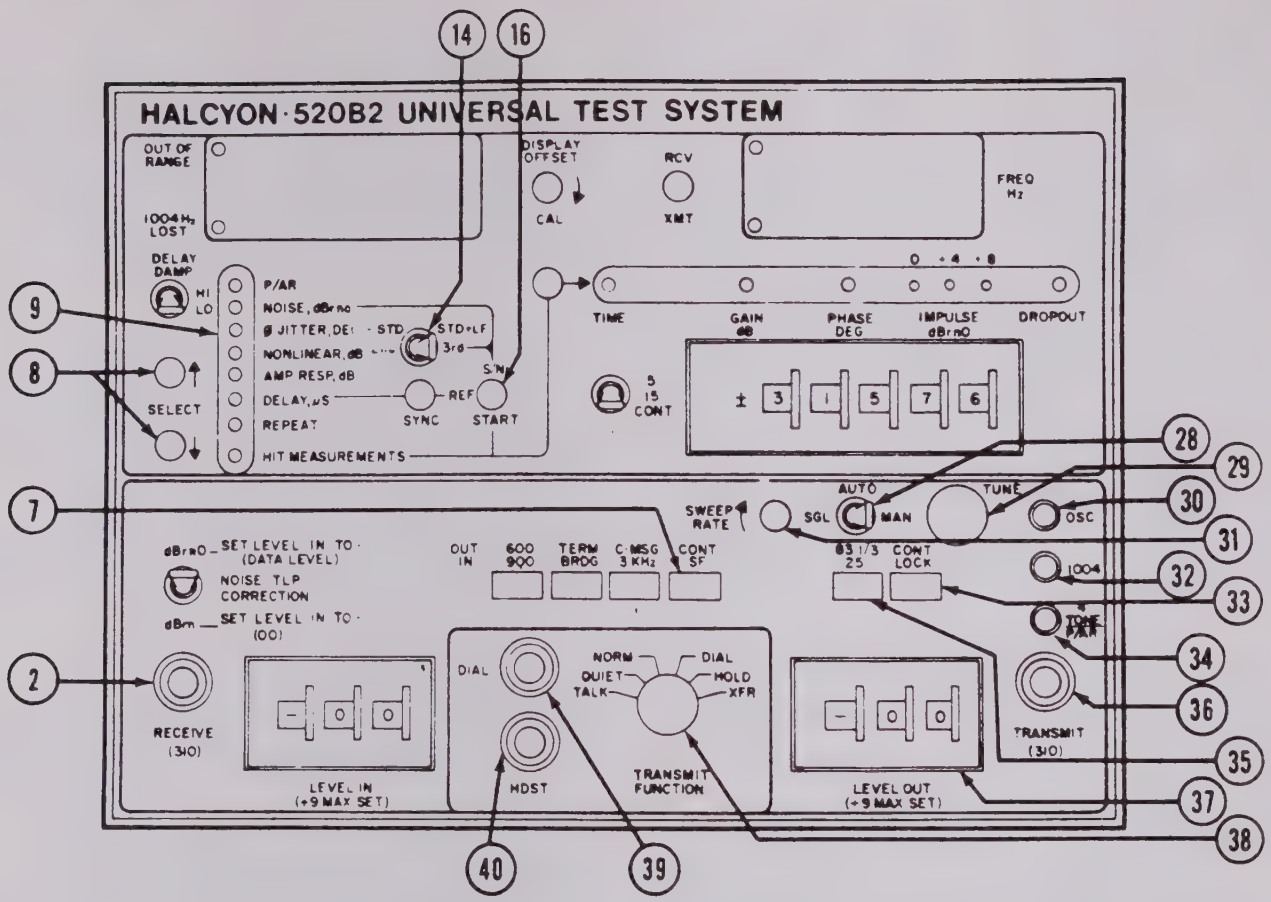

Figure 3-5. S/N-REF-START, 2nd/3rd, LEVEL OUT, SGL/AUTO/MAN, SWEEP RATE, TUNE, CONT/LOCK, CONT/SF, 83 1/3 - 25, and TRANSMIT FUNCTION Control Groups

transmitter at a constant value while effectively removing the source of any 2nd- or 3rd-order intermodulation products in the received signal. Any residual measurement reading is, therefore, due to noise or extraneous signal components, and marginal nonlinear measurement results can be corrected accordingly.

(c) DELAY. Depressing pushbutton switch (16) in this mode rereferences the delay distortion measurement readout to 0000 microseconds.

(d) HIT MEASUREMENTS. In this mode, depressing pushbutton switch (16) resets all hit measurement counting registers to 000 and starts a new counting sequence.

(7) 2nd/3rd (14, figure 3-5). This switch is applicable to both the nonlinear mode and to the phase jitter mode for those instruments equipped with the low-frequency phase jitter option.

(a) NONLINEAR. For this mode, the switch connects nonlinear measurement circuitry to either the 2nd-order or the 3rd-order pass-band filters, depending upon the switch position.

(b) Ø JITTER. For units equipped with the low-frequency phase jitter option, this switch also controls selection of STD (20 Hz to 300 Hz jitter components) or STD+LF (4 Hz to 300 Hz jitter components) when the phase jitter operating mode is selected.

c. Transmitter Controls. (See figure 3-5.)

(1) LEVEL OUT (37). This step attenuator provides an adjustment range of +9 dBm to -39 dBm in 1-dB steps for the transmitter rms output level. The output level is indicated directly in dBm on the thumbwheel switch and applies to all test signals generated by the transmitter. The transmitter test signal selection is automatically controlled by the mode SELECT switches (8), as detailed in paragraphs 3-2a(1) through 3-2a(8). The output signal mode is indicated on three status LEDs designated OSC (30), 1004 (32), and 4 TONE P/AR (34).

(2) SGL/AUTO/MAN (28). This 3-position toggle switch selects the desired method for tuning the variable-frequency test-tone oscillator. The oscillator is actuated when the AMP RESP, DELAY, and REPEAT modes are selected by the mode SELECT switches (8).

(a) SGL. In this position, the oscillator frequency is automatically tuned from approximately 200 Hz to 3550 Hz in one single sweep. At the conclusion of the single sweep, the oscillator frequency is held at its upper limit until another single sweep is initiated by momentarily placing the toggle switch in its center AUTO position and then returning it to the SGL position again. The oscillator frequency now sweeps from its upper sweep limit back to its lower limit where it is held until another single sweep is initiated as described above. The sweep rate is determined by the SWEEP RATE control (31).

(b) AUTO. This position continuously sweeps the oscillator frequency between its upper and lower limits at a rate determined by the SWEEP RATE control (31).

(c) MAN. This position is used when manual tuning of the oscillator frequency is desired.

(3) SWEEP RATE (31). This control determines the sweep rate for both the SGL (single) and AUTO (automatic) positions of switch (28). Sweep rates are adjustable from approximately 1 sweep per second to 1 sweep in 15 minutes.

(4) TUNE (29). This ten-turn potentiometer is used to manually adjust the frequency of the variable-frequency oscillator. It assumes control of the oscillator frequency when the SGL/AUTO/MAN switch (28) is placed in the MAN (manual) position, and allows the oscillator to be manually tuned in the range between approximately 200 Hz and 4000 Hz.

(5) CONT/LOCK (33). This pushbutton switch determines whether the oscillator frequency is swept or tuned in one continuous, uninterrupted range or stepped through its range in 100.4-Hz increments. The LOCK mode is implemented by phase locking the oscillator to an internal 100.4-Hz reference frequency. The 100.4-Hz reference frequency provides immunity to potential interaction with submultiples of the 8000-Hz sampling frequency on PCM T-carrier systems. If desired, the reference frequency may be changed to 100.0 Hz by means of an internally-mounted slide switch on the mother board; refer to paragraph 3-3a.

(6) CONT/SF (7). This pushbutton switch provides means for forcing the test-tone oscillator to skip the frequency band from 2540 Hz to 2750 Hz for tests conducted on circuits employing 2600-Hz SF signaling supervision tones.

(7) 83 1/3 - 25 (35). Effective only when the DELAY mode is selected, this pushbutton switch provides a choice of 83-1/3 Hz or 25 Hz as the amplitude-modulation frequency for the test-tone oscillator.

(8) TRANSMIT FUNCTION (38). This rotary switch permits selection of the following input/output circuitry configurations.

(a) TALK. The TALK position allows a headset connected to the HDST (40) and DIAL (39) jacks to be used for convenient two-way telephone communication over a 4-wire circuit interfaced to the RECEIVE (2) and TRANSMIT (36) jacks. Talk battery for the carbon microphone is supplied from the 520B2.

(b) QUIET. This position disconnects signal source circuitry from the TRANSMIT output and places a resistive termination across tip/ring of the output jack.

(c) NORM. This position configures input/output circuitry for normal test operation.

(d) DIAL. In this position, the DIAL jack (39) is connected directly to the TRANSMIT jack (36); other internal transmit/output circuitry is disconnected.

(e) HOLD. The switch transition from the DIAL position to the HOLD position is made via a make-before-break contact arrangement. The DIAL jack is disconnected during the switching sequence and a holding coil is applied across tip/ring of the TRANSMIT output to hold a dialed-up 2-wire circuit in a seized condition. In the HOLD position, the transmit output circuitry is connected to the TRANSMIT jack to permit transmission of all signal source functions to the far end of the seized 2-wire circuit.

(f) XFR. This position transposes internal measurement and signal source circuitry to facilitate two-way tests on dial-up 2-wire circuits while far-end to near-end measurements are made. Measurement circuitry is connected to the TRANSMIT jack and signal source circuitry is connected to the RECEIVE jack. The holding coil connection to tip/ring of the TRANSMIT jack is also retained to hold a previously dialed-up 2-wire circuit in a seized condition.

d. Display Controls. (See figure 3-6.)

(1) Primary Display (13). The left display is used as the primary measurement readout for all measurement modes. The display is dedicated to the receive section with measurement parameter and display units controlled by the mode SELECT switches (8) and associated mode indicators (9). Two "non-valid measurement" LED indicators are incorporated within the primary display window:

(a) OUT OF RANGE (12). This indicator is illuminated and the numerical display is extinguished whenever the signal being measured exceeds permissible levels for an accurate measurement. This out-of-range function is applicable only to the NOISE, AMP RESPONSE, DELAY, and REPEAT measurement modes.

(b) 1004 Hz LOST (11). This LED indicator flashes when the holding tone frequency is not within approximately ±65 Hz of 1004 Hz, or when no holding tone within this frequency range is detected by the measurement circuitry. This indicator function is applicable only to the Ø JITTER, NOISE, and HIT MEASUREMENTS modes.

(2) DISPLAY OFFSET (17). This control should be kept in the full clockwise (detented) CAL position except when making frequency response measurements in the AMP RESP mode. The control provides a level adjustment range slightly in excess of 1 dB. In conjunction with the LEVEL IN attenuator (1), it may be used to set the measurement display to a 00.0-dB value at the 1004-Hz reference frequency, preparatory to making a frequency-response measurement. Strict precautions should be taken to return the control to its normal detented CAL position upon completion of the frequency-response measurement. Failure to do so will result in erroneous measurements in other level-sensitive tests. The LEVEL IN

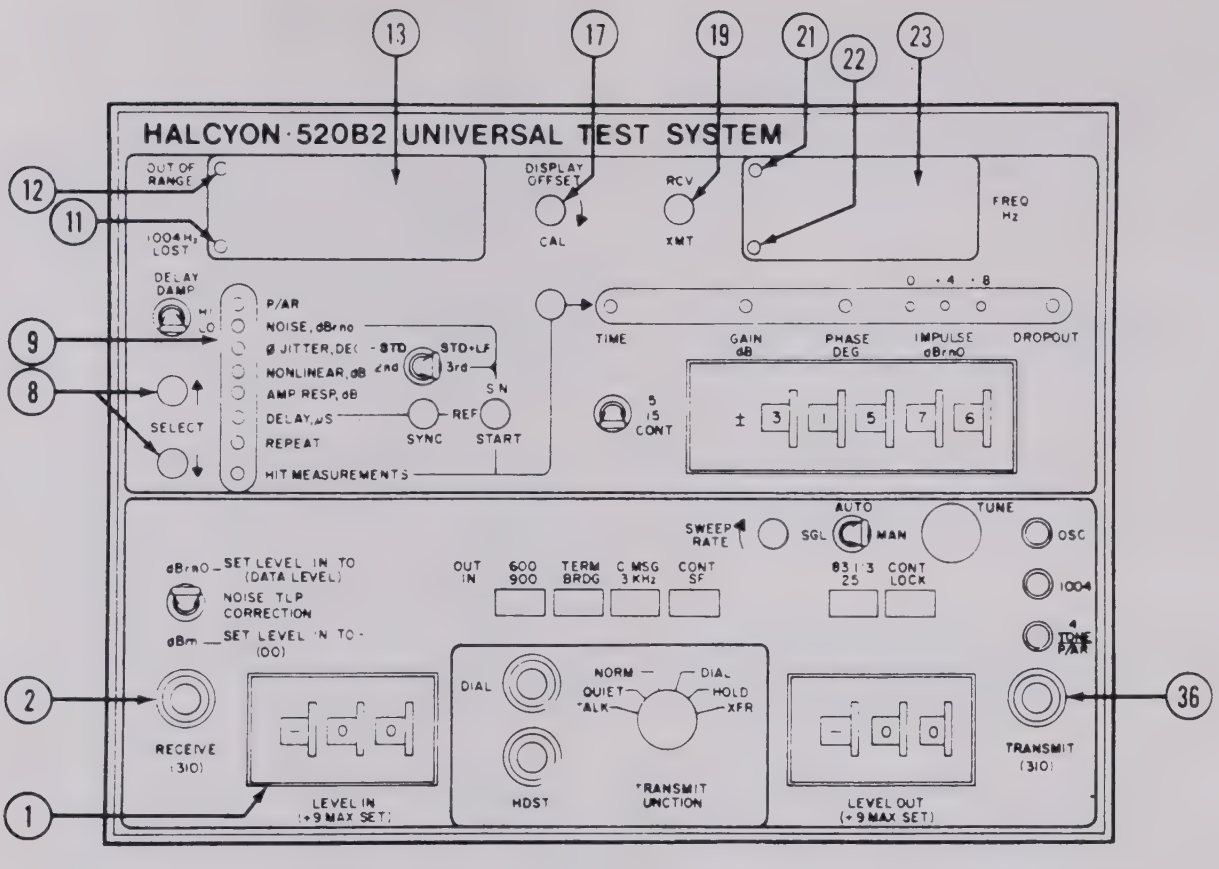

Figure 3-6. Primary Display, Non-valid Measurements, DISPLAY OFFSET, FREQ Hz Display, and RCV/XMT Control Groups

attenuator (1) should also be returned to its proper setting if readjustment was necessary for a 00.0-dB, 1004-Hz reference reading.

(3) FREQ Hz Display (23). This display is used to monitor the frequency of the selected transmitter signal or to display the frequency of a single frequency signal applied to the RECEIVE input (2). The frequency is measured by an internal frequency counter and displayed to a resolution of 1 Hz.

(4) RCV/XMT (19). This pushbutton switch selects either the TRANSMIT (36) or RECEIVE (2) signal for display on the FREQ Hz display (23). Associated LED indicators within the display window are illuminated to show the selected function. The upper LED (21) lights for RCV and the lower LED (22) lights for XMT.

e. Mainframe Front-Panel Controls. (See figure 3-7.)

(1) POWER (42). This pushbutton switch functions as the main power switch for both the 500B Mainframe and the 520B2 Plug-In module. The pushbutton illuminates to provide a positive indication of the power-on condition.

(2) ILLUM (43). This potentiometer varies the crt graticule scale illumination.

(3) FOCUS (44). This potentiometer adjusts the crt display for optimum sharpness.

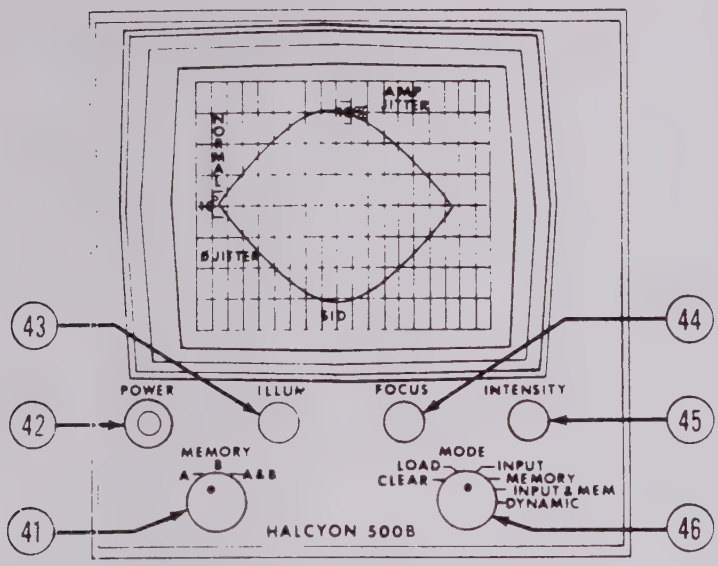

Figure 3-7. Mainframe Front-Panel Controls

(4) INTENSITY (45). This potentiometer adjusts the crt display for desired brightness.

(5) MEMORY (41). This three-position rotary switch selects the memory configuration (A, B, or A&B) as required for the operating modes described below.

(6) MODE (46). The MODE six-position rotary switch determines how the incoming signal from the plug-in module is processed and displayed.

(a) CLEAR. Clears (resets) the selected memory and establishes a baseline at the bottom line of the screen.

(b) LOAD. Loads the selected memory with the response signal from the plug-in module.

(c) INPUT. Signals from the plug-in module are presented directly on the screen in real time.

(d) MEMORY. Display is derived from the selected memory.

(e) INPUT & MEM. Both the stored response curve in memory and the active input are displayed simultaneously.

(f) DYNAMIC. Both A and B memories are displayed and the B memory is also updated continuously by the scope input signal.

f. Rear-Panel Controls and Connectors. (See figure 3-8.)

(1) RECEIVE IN/TRANSMIT OUT (49). These banana jacks are connected in parallel with front panel RECEIVE and TRANSMIT jacks.

(2) VOLUME (50). Volume potentiometer controls the audio level of the monitor speaker mounted behind the rear panel.

(3) NORM/EXPD (47). This toggle switch increases scope vertical deflection sensitivity from 5 dB per division to 2 dB per division.

(4) PAR & COUNTS OUTPUTS (48). This 24-pin connector provides various outputs for external display, recording, or control equipment. Hit counter outputs are buffered TTL levels, with

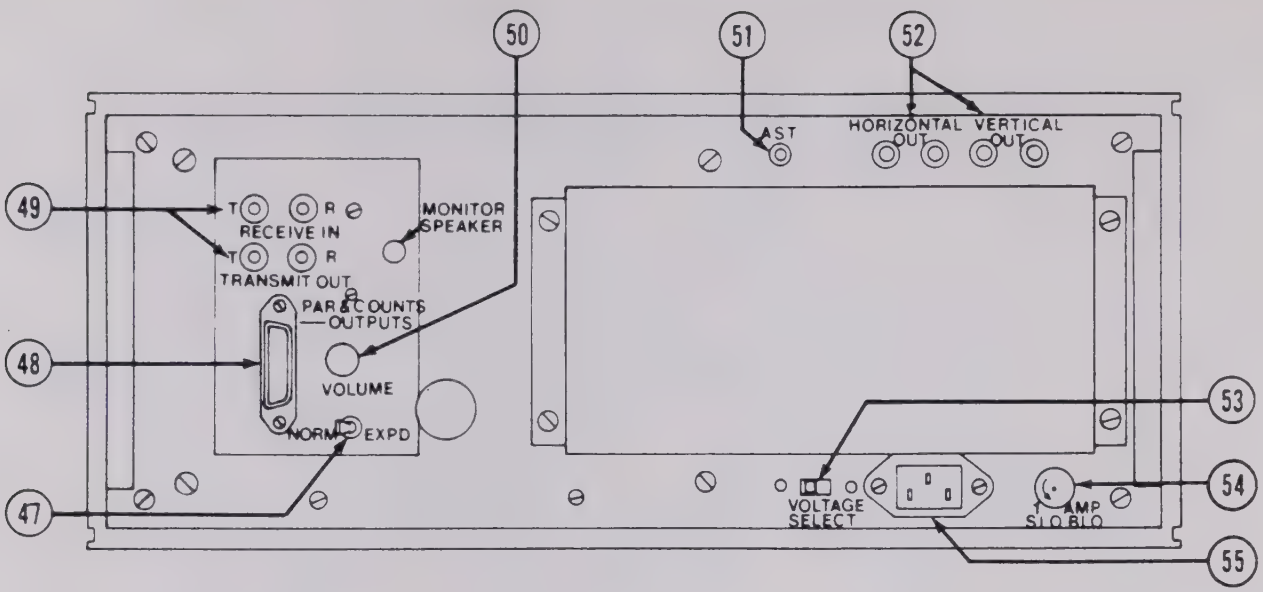

Figure 3-8. Rear-Panel Controls, Connectors, and Fuse

+5V indicating the off state and 0V the on state. Pin connections are as follows:

Function	Pin	Function	Pin
Gain Hit	1	Phase Jitter	10
Phase Hit	2	Ground	12
Impulse	3	Y-axis	13
Impulse +4	4	X-axis	14
Impulse +8	5	Ground	24
Dropout	6		

(5) HORIZONTAL OUT/VERTICAL OUT (52). These banana jacks provide scope X and Y axis drive for remote monitoring equipment.

(6) AST (51). This screwdriver-adjust potentiometer provides for correction of astigmatism in the crt display.

(7) VOLTAGE SELECT (53). This screwdriver activated slide switch is set during installation to power line requirements of 115 or 230 volts.

(8) 1 AMP SLO BLO (54). The fuse protects the primary power circuit.

CAUTION

A 1-ampere fuse is used only for a 115-volt power source. When a 230-volt source is used, a 0.5-ampere fuse must be used.

(9) Power Connector (55). The detachable power cord is plugged into this connector.

3-3. INTERNAL PRESET SWITCHES. Located within the equipment are internal preset switches which must be set for specific measurement requirements. These switches with assigned functions are briefly discussed in this section.

a. LOCK Frequency. The standard incremental lock frequency is 100.4 Hz which provides an offset from an even submultiple of the T-carrier 8000-Hz sampling frequency. This lock frequency can, however, be changed to 100.0 Hz by a slide switch (S1) mounted on Interconnect Circuit Card 1A1A3 between connectors J11 and J12 (see figure 6-11). The lock frequency is 100.4 Hz when the switch is positioned toward the front of the unit, and 100.0 Hz when positioned toward the rear.

b. TLP Correction Factor. The 520B2 input attenuator is normally adjusted to the equivalent value of the expected test-tone level at the point of measurement. To permit noise and impulse noise measurements to be made directly as a dBrn0 reading (a normalized reading relative to the TLP at the point of measurement) the NOISE/TLP CORRECTION switch, when placed in the dBrn0 position, applies a 13-dB automatic correction to the input attenuator setting. This references the measurement to the TLP value rather than the -13 dBm0 data level value. The correction may be set to any value from 0 to 30 dB by means of two thumbwheel switches (S1-A and S1-B) mounted on Autoranging and TLP Circuit Card 1A13 (see figure 6-23). These switches are normally factory set to 13 dB to comply with current industry-wide data test levels of -13 dBm0.

c. Display Blanking. Blanking of an additional readout digit in the parameter display is accomplished by switch S1 located on Data and Display Control Circuit Card 1A9 (see figure 6-19). During normal operation this readout digit is blanked; it is unblanked only to perform the calibration procedures in Chapter 5.

d. Factory Test Convenience. Slide switch S1 on Repeat and Transmit Function Circuit Card 1A2 (see figure 6-12) is used only during initial test at the factory. It must always be positioned toward the top of the board.

3-4. TURN-ON AND INITIAL SETUP PROCEDURES. The following procedures must be performed before connecting the test system to the circuit under test. The primary purpose of these procedures is to ensure that instrument power, input/output levels and impedances of the 520B2 are properly set relative to the circuit test point. It is particularly important to be certain that the transmit level is properly adjusted. An excessive output level, in addition to causing measurement error, can result in transmission impairment to potentially hundreds of other circuits associated with the circuit under test.

Pertinent characteristics of the circuit to be tested, including transmit and receive Transmission Level Point (TLP) values and impedances, may be obtained from the circuit layout record card (CLRC) or equivalent circuit design records. In addition, the appropriate system practice or system testing procedure should be reviewed and used as the primary guideline in performing the desired data tests.

a. Turn-on Procedures.

(1) Select correct operating voltage, 115 or 230 V ac, using switch (53, figure 3-8) located on rear panel of mainframe. Connect power cord to receptacle (55) and to ac power line.

(2) Turn power on by depressing POWER switch (42, figure 3-7).

(3) Set NORM/EXPD switch (47, figure 3-8) to NORM.

b. Initial Control Settings. (See figure 3-9.) Preliminary setup switch selections and control adjustments are as follows:

(1) Place 600/900 switch (4) in either the 600 ohm (out) or 900 ohm (in) position in accordance with the specified impedance of the circuit under test. Most 4-wire circuits are tested using the 600 ohm (out) position; 2-wire subscriber loop facilities are typically tested using the 900 ohm (in) position.

(2) Verify that TERM/BRDG switch (5) is in the TERM (out) position unless a bridging type measurement is to be made with the circuit separately terminated by another test set or device.

(3) Set TRANSMIT FUNCTION switch (38) to NORM.

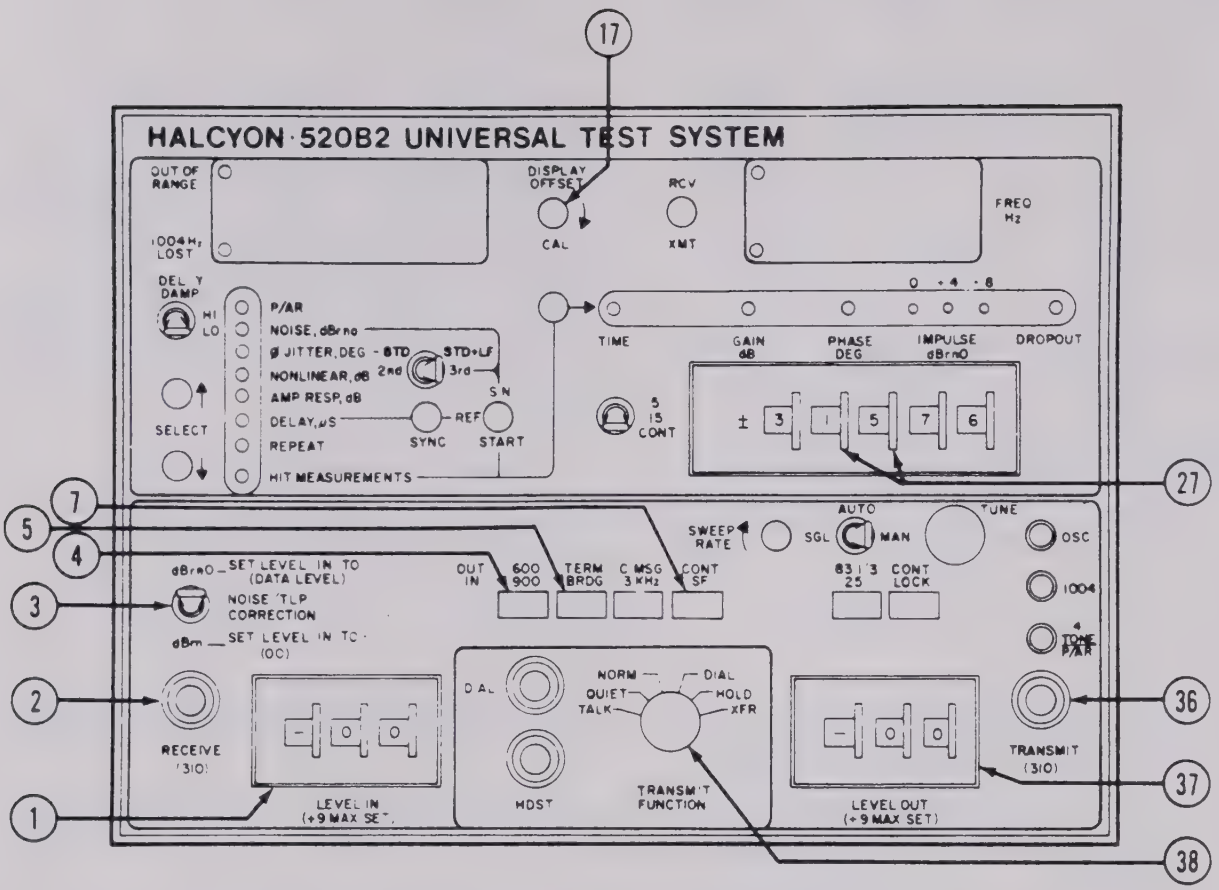

Figure 3-9. Initial Control Settings

(4) Set LEVEL OUT attenuator switch (37) to the proper -13 dBm0 data transmit level as specified on the CLR card or equivalent circuit design record. If only the TLP value for the test point is specified, the attenuator should be set to a value 13 dB below the indicated TLP value.

(5) Set LEVEL IN attenuator switch (1) to the expected -13 dBm0 receive level as similarly specified on the CLR card.

(6) Set NOISE/TLP CORRECTION switch (3) to the dBrn0 (up) position.

(7) Verify that DISPLAY OFFSET control (17) is in the CAL (calibrated) full clockwise position.

(8) If the circuit under test employs SF (2600-Hz single-frequency) supervision, set CONT/SF switch (7) to the SF (IN) position.

(9) If hit measurements are being made, verify that PHASE DEG threshold switches (27) are at any position other than 00 (0 degree threshold disables the hit counters).

(10) The circuit to be tested may now be connected to RECEIVE (2) and/or TRANSMIT (36) front-panel jacks or to the optional rear-panel terminals. 2-wire circuits should be connected to the TRANSMIT jack. This completes the initial set-up procedures.

3-5. ON-LINE MEASUREMENT PROCEDURES. This section includes four areas of

operating information applicable to on-line measurement procedures. Included are measurement procedures; dial, hold, and talk procedures; oscilloscope display procedures; and X-Y recording procedures.

The test system is designed to characterize a voice-frequency (VF) transmission circuit with reference to its data transmission capabilities; thus, all the instructions specify a test-tone level or expected measurement level of -13 dBm0. The instrument may also be used as a general purpose transmission test set to measure circuit loss, bandwidth, and noise using any test level up to +6 dBm. The measurement procedures are described in terms of near-end to far-end and far-end to near-end tests. In either case, the instructions are always directed to the near-end operator. Near-end to far-end tests cover the procedures for transmitting a test signal. Far-end to near-end tests cover the procedures for receiving and measuring the test signal. These procedures can be combined for loop tests, where both ends of the circuit are available at the same point of test.

Step-by-step procedures for performing each specific data test are provided in the following paragraphs. It is particularly important that circuit loss measurements, paragraph a, be performed first and any necessary adjustments required to bring the circuit loss within allowable limits be made before any other test parameters are measured. This is necessary because many of the other test parameters are level sensitive. Loss measurements on data circuits should be made using an applied test tone level of -13 dBm0 and a reference frequency of 1004 Hz.

a. Circuit Loss Measurement. This test, often referred to as 1000-Hz loss deviation, is a measurement of the attenuation from one end of the circuit to the other end at a reference frequency of 1004 Hz. 4-wire circuits are typically designed to provide 16 dB of loss on an end-to-end basis. There should normally be only 10 dB of loss between end points of a 2-wire circuit.

(1) Near-End to Far-End Measurements. (See figure 3-10.) This test involves sending a 1004-Hz test tone to the far end where it will be measured by other test personnel. The procedure is as follows:

(a) Verify or perform initial setup procedures (paragraph 3-4). Connect near-end TRANSMIT to far-end RECEIVE and far-end TRANSMIT to near-end RECEIVE.

(b) Use SELECT switches (8) to step mode indicator (9) to AMP RESP, dB. Verify that OSC indicator (30) lights.

(c) Set CONT/LOCK switch (33) to LOCK (in).

(d) Set SGL/AUTO/MAN switch (28) to MAN.

(e) Depress RCV/XMT switch (19) so that transmit indicator (22) lights.

(f) Adjust TUNE control (29) for a reading of 1004 ±1 Hz on FREQ Hz display (23).

(g) A 1004-Hz test tone is now being applied to the circuit under test at a -13 dBm0 data level. Circuit loss measurement may now be made by test personnel at the far end of the circuit.

(2) Far-End to Near-End Measurements. (See figure 3-10.) To measure the 1000-Hz loss deviation, proceed as follows:

(a) Verify or perform initial setup procedures (paragraph 3-4). Connect near-end TRANSMIT to far-end RECEIVE and far-end TRANSMIT to near-end RECEIVE. For 2-wire circuits, set TRANSMIT FUNCTION switch (38) to XFR.

(b) Use SELECT switches (8) to step mode indicator (9) to AMP RESP, dB.

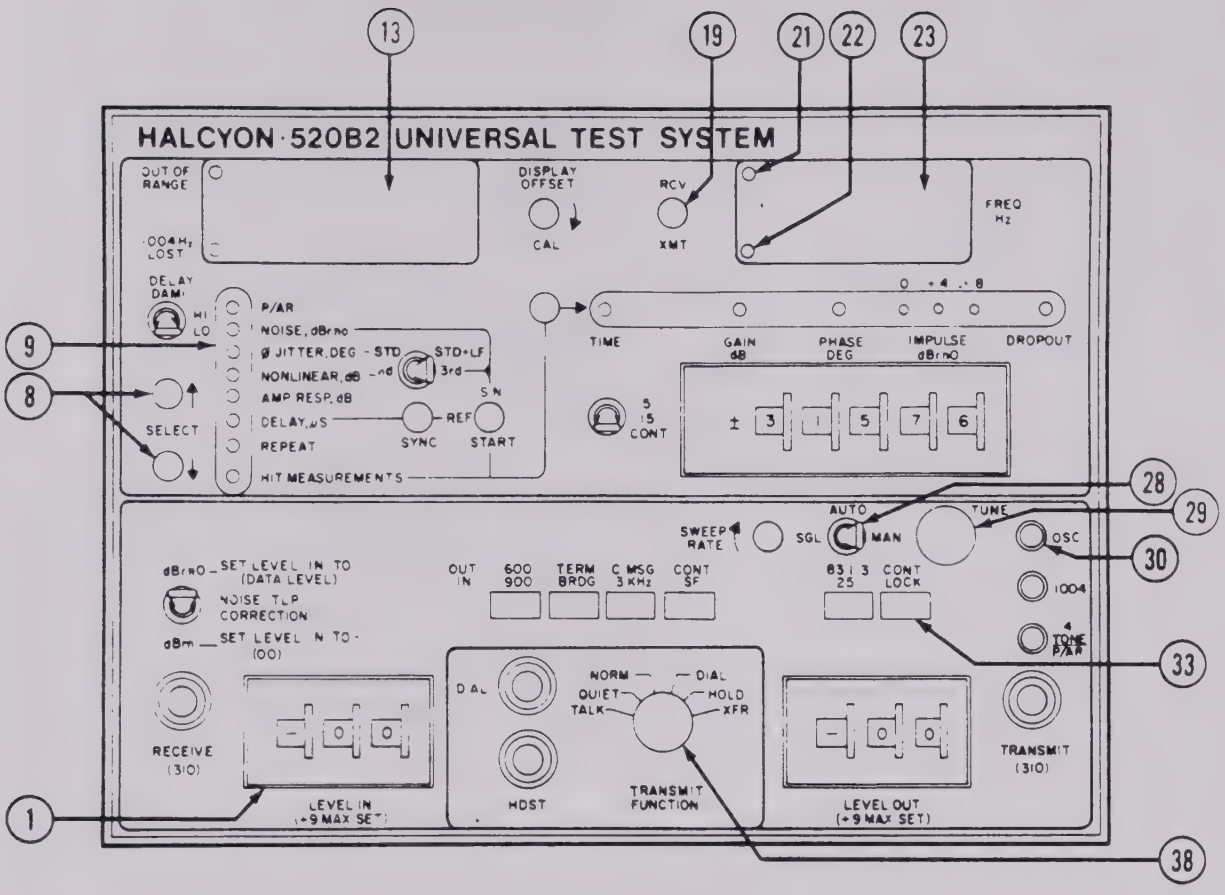

Figure 3-10. Circuit Loss Measurement Controls

(c) Depress RCV/XMT switch (19) so that receive indicator (21) lights.

(d) Request far-end operator to transmit 1004-Hz test tone at -13 dBm0 level.

(e) Record frequency of received test signal as displayed on FREQ Hz display (23).

(f) Record plus or minus loss deviation from expected value as displayed on primary display (13).

(g) If absolute dBm value of the received signal level is required, use either of the following procedures:

1. Compute the algebraic sum of the display reading (13) and the LEVEL IN attenuator setting (1), or:

2. Set LEVEL IN attenuator (1) to 00 and read the absolute dBm value directly on display (13).

(h) If dBM value of the received signal relative to TLP is required, set the LEVEL IN attenuator to the receive TLP value and read the relative dBm0 value directly on the display.

NOTE

Return LEVEL IN attenuator (1) to the original -13 dBm0 data level value before proceeding to the next test.

b. Attenuation Distortion (Frequency Response) Measurement. Attenuation distortion is the variation in circuit loss as a function of frequency. The

measurement is implemented by applying a variable-frequency test tone to one end of a circuit and measuring the variation in received level versus frequency at the other end. The distortion is stated in terms of the circuit loss at a particular frequency referenced to the loss at 1000 Hz. Some practices call for the measurement to be stated in terms of + values for more loss and - values for less loss. Measurements made with the 520B2 are of the opposite polarity, and appropriate sign reversal for the + and - prefix will be required for compliance with these practices.

This measurement is normally implemented on an end-to-end basis as described in the following paragraphs. The 520B2 provides a Repeat mode to enable far-end to near-end and near-end to far-end measurement to be made with measurement readout for both directions of the test being displayed at the "master" unit (see paragraph 3-5i).

(1) Near-End to Far-End Measurements. (See figure 3-11.) The procedure for this transmit-only measurement is as follows:

(a) Verify or perform initial setup procedures (paragraph 3-4). Connect near-end TRANSMIT to far-end RECEIVE.

(b) Use SELECT switches (8) to step mode indicator (9) to AMP RESP, dB. Verify that OSC indicator (30) lights.

(c) Set CONT/LOCK switch (33) to LOCK (in).

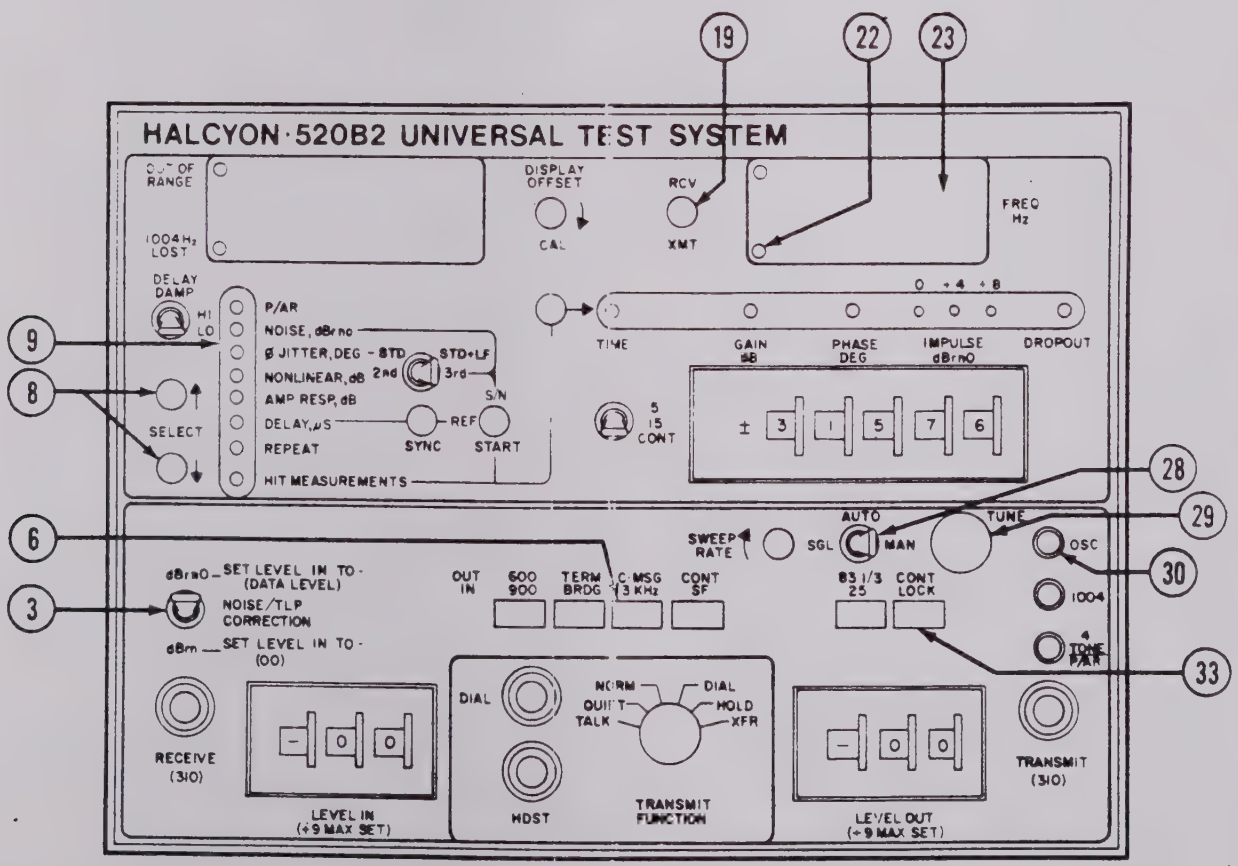

Figure 3-11. Attenuation Distortion (Frequency Response) Near-End to Far-End Measurement Controls

(d) Set SGL/AUTO/MAN switch (28) to MAN.

(e) Depress RCV/XMT switch (19) so that transmit indicator (22) lights.

(f) Adjust TUNE control (29) for a reading of 1004±1 Hz on FREQ Hz display (23).

(g) Notify the far-end operator that a 1004-Hz reference tone at -13 dBm0 data level is being sent. The far-end operator will in turn either normalize his measurement readout for a 00 dB reading or record the measured value as his 1-kHz reference.

(h) In close coordination with the far-end operator, starting with the lowest specified frequency, tune the 520B2 variable oscillator sequentially to the various test frequencies called out in the system parameters. Pause at each frequency increment long enough for the far-end operator to read and record the respective level measurement.

NOTE

With the CONT/LOCK switch (33) in the LOCK (in) position (and the internal phase-lock selection of 100.4 Hz), the variable oscillator can be tuned to only the frequency increments listed in table 3-1. The frequencies so listed may reflect a slight offset from the test frequencies specified in the system parameters. If desired by the far-end operator, switch (33) may be placed in the CONT (out) position and the oscillator can then be continuously tuned to within ±1 Hz of any specified frequency in the range of 200 Hz to 4000 Hz.

The variable oscillator may also be automatically sweep tuned in single or repetitive scans with the SGL/AUTO/MAN switch (28) in the SGL or AUTO positions. This tuning mode is typically used for making X-Y pen recordings; refer to paragraph 3-7b.

Table 3-1. Test Frequencies in LOCK Mode

200.8	2208.8
301.2	2309.2
401.6	2409.6
502.0	2510.0
602.4	2610.4
702.8	2710.8
803.2	2811.2
903.6	2911.6
1004.0	3012.0
1104.4	3112.4
1204.8	3212.8
1305.2	3313.2
1405.6	3413.6
1506.0	3514.0
1606.4	3614.4
1706.8	3714.8
1807.2	3815.2
1907.6	3915.6
2008.0	4016.0
2108.4	

(2) Near-End to Far-End Measurements (Far-end 520B2 in Repeat Mode). (See figure 3-12.) In this mode, the received level variations at the far end are "repeated" back to the near end as changes in the level of a 1204-Hz test tone applied to a return circuit. A measurement of level variations of the 1204-Hz "repeat" signal by the near-end 520B2, relative to the transmitted frequency of its variable oscillator signal as it is tuned across the passband of the circuit under test, represents the near-end to far-end frequency response. Refer to paragraph 3-5i(1) for procedures covering operation of the far-end "repeat" unit.

(a) Verify or perform initial setup procedures (paragraph 3-4). Connect near-end TRANSMIT to far-end RECEIVE and far-end TRANSMIT to near-end RECEIVE.

(b) Use SELECT switches (8) to step mode indicator (9) to AMP RESP, dB.

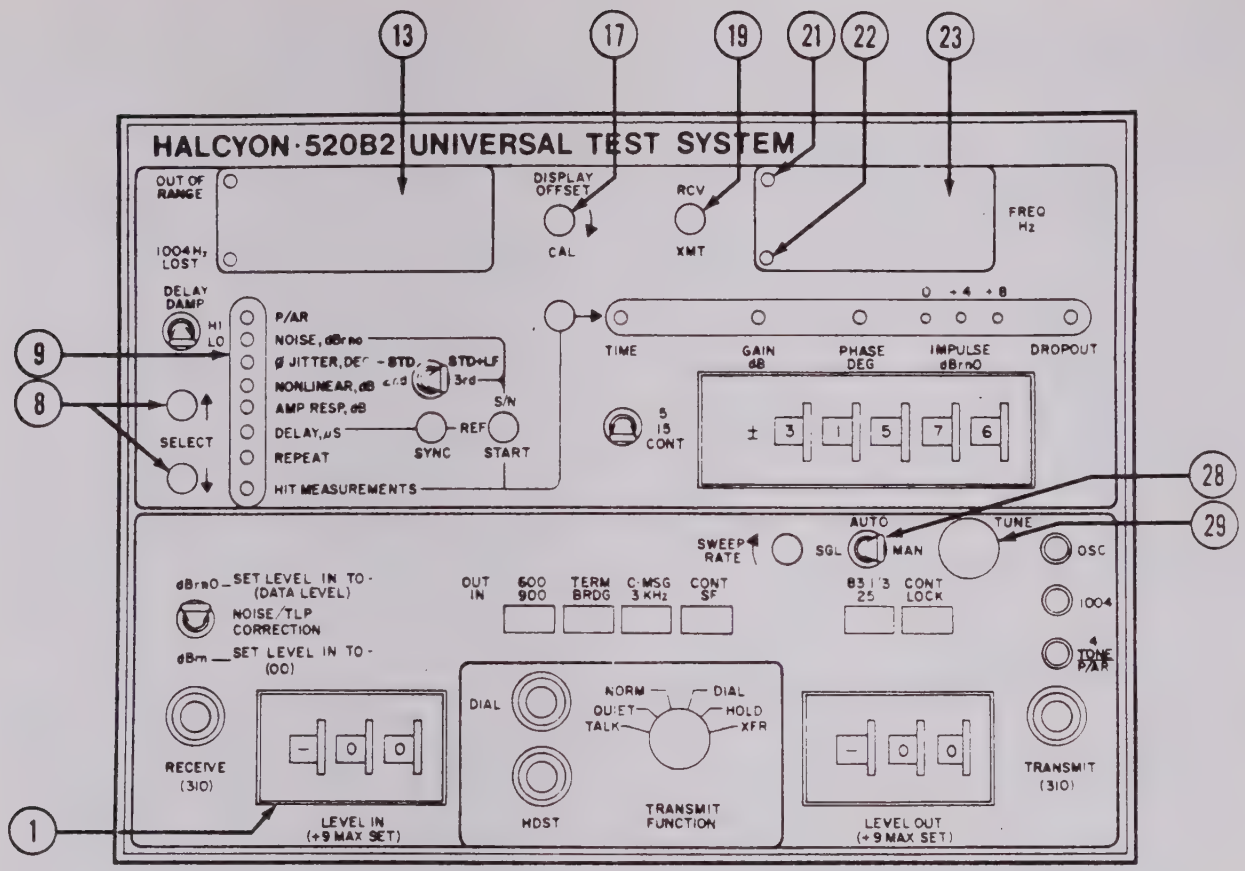

Figure 3-12. Attenuation Distortion (Frequency Response) Near-End to Far-End Measurement Controls, with Far-End 520B2 in Repeat Mode, and Far-End to Near-End Measurement Controls

(c) Depress RCV/XMT switch (19) so that transmit indicator (22) lights.

(d) Set SGL/AUTO/MAN switch (28) to MAN.

(e) Adjust TUNE control (29) for a reading of 1004±1 Hz on FREQ Hz display (23).

(f) Request far-end operator to establish Repeat mode and send 1204-Hz signal at -13 dBm0 (see paragraph 3-5i(1).

(g) Depress RCV/XMT switch (19) so that receive indicator (21) lights.

(h) Verify FREQ Hz display (23) indicates approximately 1204 Hz.

(i) Verify that received signal level value on display (13) is within allowable limits for circuit under test.

(j) Adjust DISPLAY OFFSET control (17) to zero primary display (13). If necessary, adjust LEVEL IN attenuator (1) to bring the zero reading within the range of the DISPLAY OFFSET control.

(k) Depress RCV/XMT switch (19) so that transmit indicator (22) lights.

(m) Manually tune to each test frequency listed in the applicable practice. At each test frequency

displayed (23), read and record the value indicated on primary display (13).

(n) Return DISPLAY OFFSET control (17) to CAL position.

(p) Return LEVEL IN attenuator (1) to expected receive data level position (if changed in step (j) above).

(3) Far-End to Near-End Measurements. (See figure 3-12.) The procedure for this receive-only measurement is as follows:

(a) Verify or perform initial setup procedures (paragraph 3-4). Connect far-end TRANSMIT to near-end RECEIVE.

(b) Use SELECT switches (8) to step mode indicator (9) to AMP RESP, dB.

(c) Depress RCV/XMT switch (19) so that receive indicator (21) lights.

(d) Request far-end operator to transmit 1004±1 Hz test tone at -13 dBm0.

(e) Verify FREQ Hz display (23) indicates approximately 1004 Hz. Any noted frequency deviation may be due to presence of frequency translation or to possible inaccuracy in setting far-end oscillator frequency.

(f) For a reference point, adjust DISPLAY OFFSET control (17) to zero the primary display (13). If necessary, adjust LEVEL IN attenuator (1) to bring the zero reading within the range of the DISPLAY OFFSET control.

(g) Request far-end operator to sequentially tune his applied signal source to the test frequencies specified in the parameters being followed, pausing at each frequency long enough for you to read and record the measurement. As previously noted, it is customary that the operator start with the lowest frequency and, upon your approval, proceed to the next test increment, etc.

(h) Continue this sequence until a record of relative level loss has been obtained for all test frequencies.

(i) Return DISPLAY OFFSET control (17) to CAL position.

(j) Return LEVEL IN attenuator (1) to expected receive data level position (if changed in step (f) above).

c. Delay Distortion Measurement. Delay distortion is the variation in transit time as a function of frequency for the transmission of a signal from one end of a circuit to the other end. The measurement is typically implemented by applying a variable-frequency test tone, whose amplitude is modulated by a relatively low-frequency modulation reference, to one end of a circuit. Delay distortion is measured by detecting the relative phase shift of the demodulated envelope occurring at the other end of the circuit as the test tone frequency is tuned across the circuit's pass band. The variation in phase of the demodulated envelope as a function of the test tone (or carrier) frequency, when converted to an equivalent time relationship, represents the delay distortion of the circuit.

For loop tests, when both ends of the circuit are available at the same point of test, the measurement is simplified. Only a single test set is required, with this unit functioning both as the transmitting device and as the receiving device. Since the transmitting modulation reference and the demodulated envelope (extracted from the test signal after transmission over the circuit under test) are both available within the same test set, the phase comparison can be made directly and readily converted to a relative delay reading in units of time.

End-to-end tests require the availability of a return or forward reference path between the test sets at each end of the circuit to achieve optimum

accuracy. The standard technique is to measure the forward line by transmitting a modulated swept/stepped signal forward to the far-end test set which is in a repeat mode. The far-end unit repeats the modulation envelope back on the return line to the originating set on a fixed frequency carrier. The return line may be similarly tested by transmitting a fixed frequency-modulated carrier to the far-end unit which in turn repeats the detected reference modulation envelope back on the return line under test using a modulated swept or stepped signal. On 4-wire measurements, forward/return reference paths are inherently available. Similar type 2-wire measurements require the use of a separate circuit as the return/forward reference path.

If a separate reference circuit is not available, 2-wire tests can be made with the 520B2, although at reduced accuracy. For this application, the internal reference generators of the two sets must be carefully and precisely synchronized for minimum phase drift during the course of the measurement. A technique for synchronizing the two modulation reference sources using the storage scope is described in paragraph 3-6d(8).

The following paragraphs provide detailed instructions for performing delay distortion measurements in loop and end-to-end tests where a return/forward reference circuit is available.

NOTE

Attenuation distortion measurements, paragraph 3-5b, should be made and any necessary adjustments required to bring the distortion within allowable limits should be performed before attempting the following tests.

(1) Loop Measurements. (See figure 3-13.) Procedures for loop measurements are as follows:

(a) Verify or perform initial setup procedures (paragraph 3-4). Connect near-end TRANSMIT to near-end RECEIVE.

(b) Use SELECT switches (8) to step mode indicator (9) to DELAY, us. Verify OSC indicator (30) lights.

(c) Set 83 1/3 - 25 switch (35) to 83 1/3 (out) position unless the practice being followed specifically requires a 25-Hz modulation frequency.

(d) Set DELAY DAMP switch (10) to LO position. The HI position may be used, if required, to obtain more stable readings on a noisy line.

(e) Set SGL/AUTO/MAN switch (28) to MAN.

(f) Depress RCV/XMT switch (19) so that transmit indicator (22) lights.

(g) Adjust TUNE control (29) for a reading of 1804±1 Hz on FREQ Hz display (23).

(h) Press REF switch (16). Display (13) will reset to zero microseconds.

(i) Manually tune to each test frequency listed in the applicable practice. At each test frequency displayed (23), read and record the delay distortion indicated on primary display (13).

NOTE

Some midband values will show negative sign values unless the 1804-Hz reference frequency happens to correspond to minimum circuit delay. The delay characteristics must then be expressed algebraically. To avoid this problem, repeat the test using the test frequency with the most negative delay distortion value as the referenced frequency (steps (g) and (h) above). All readings will now be positive with respect to this new reference.

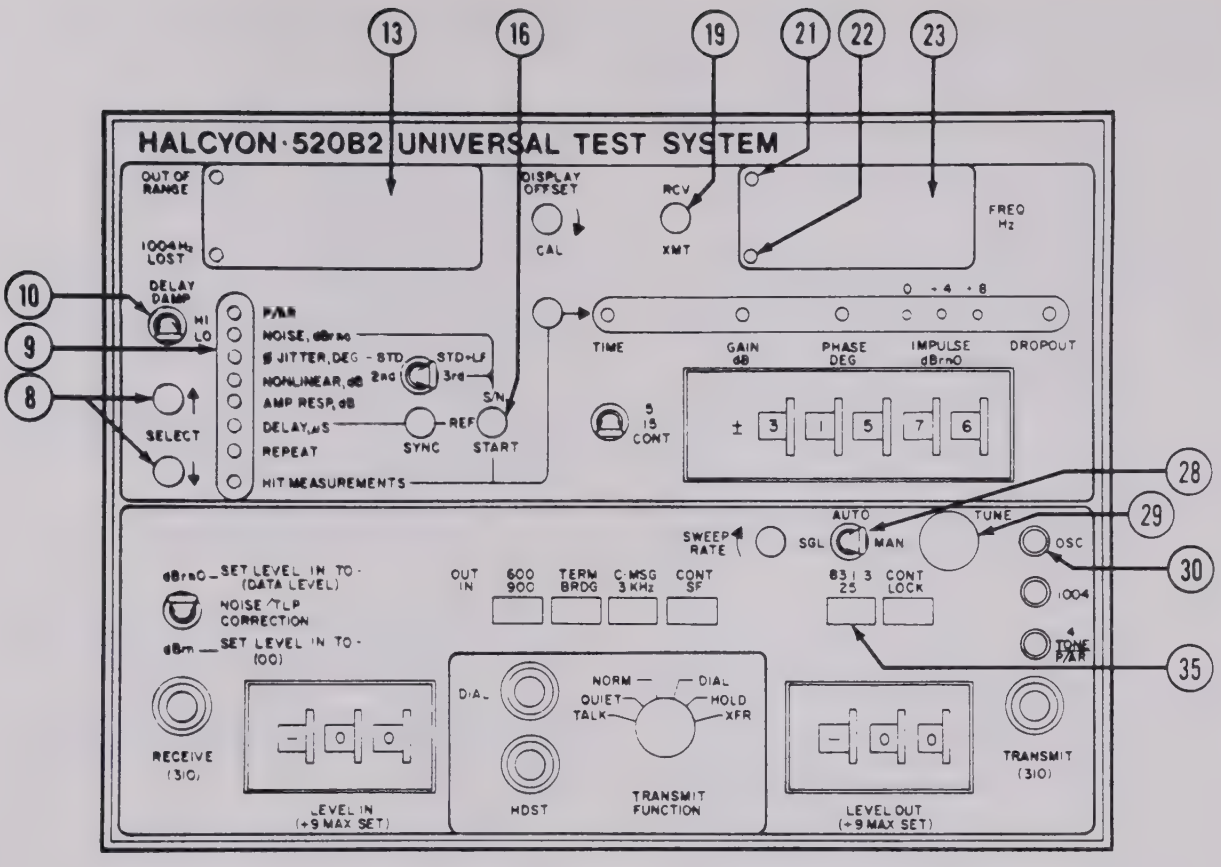

Figure 3-13. Delay Distortion Measurement Controls

(2) Near-End to Far-End Measurements, 4-Wire Circuit (Far End in Repeat Mode). (See figure 3-13.) Procedures for testing the forward line from the near-end unit are identical to the requirements for loop tests; see paragraph 3-5c(1). The far-end equipment (in Repeat mode) must have the output level properly adjusted to -13 dBm0 and typically have its oscillator set to a frequency of 1204 Hz. Before the actual delay tests are started, the near-end operator should verify that the level of the 1204-Hz return signal is within allowable range.

(3) Far-End to Near-End Measurements, 4-Wire Circuit (Far-End in Repeat Mode). (See figure 3-13.) Procedures for this mode are as follows:

(a) Verify or perform initial setup procedures (paragraph 3-4). Connect far-end RECEIVE to near-end TRANSMIT and near-end RECEIVE to far-end TRANSMIT.

(b) Use SELECT switches (8) to step mode indicator (9) to AMP RESP, dB. Verify OSC indicator (30) lights.

(c) Set 83 1/3 - 25 switch (35) to 83 1/3 (out) position unless the practice being followed specifically requires a 25-Hz modulation frequency.

(d) Set DELAY DAMP switch (10) to LO position. The HI position may be used, if required, to obtain more stable readings on a noisy line.

(e) Set SGL/AUTO/MAN switch (28) to MAN.

(f) Depress RCV/XMT switch (19) so that transmit indicator (22) lights.

(g) Adjust TUNE control (29) for a reading of 1204±1 Hz on FREQ Hz display (23).

(h) Request far-end operator to transmit 1804 Hz at -13 dBm0 on the return circuit.

(i) Depress RCV/XMT switch (19), so that receive indicator (21) lights.

(j) Verify received signal level on display (13) is within allowable limits for a frequency of 1804 Hz.

(k) Use SELECT switches (8) to step mode indicator (9) to DELAY, us. Verify OSC indicator (30) lights.

(m) Verify FREQ Hz display (23) shows received frequency of approximately 1804 Hz.

(n) Request far-end operator to depress RCV/XMT switch (19) so that far-end receive indicator (21) lights.

(p) Request far-end operator to verify that received level is within allowable range and frequency is approximately 1204 Hz.

(q) Press REF switch (16). Display (13) will reset to zero microseconds.

(r) Request far-end operator to go into transmit mode.

(s) Request far-end operator to tune to each test frequency in the applicable system parameters. For each frequency received, read and record the measurement value indicated on the primary display (13) along with the respective frequency indicated on FREQ Hz display (23).

(4) Near-End to Far-End Measurements, 2-Wire Circuit with Auxiliary Return Circuit (Far End in Repeat Mode). (See figure 3-14.) This procedure is identical to the equivalent 4-wire circuit test, paragraph 3-5c(2), except for interface connections. The circuit under test is connected to the TRANSMIT jack (36) and the auxiliary return circuit is connected to the RECEIVE jack (2). At the far-end repeat unit, the transmit output should be connected to the return auxiliary circuit and the 2-wire circuit under test should be connected to the Repeat unit's receive jack.

(5) Far-End to Near-End Measurements, 2-Wire Circuit with Auxiliary Forward Circuit (Far End in Repeat Mode). (See figure 3-14.) This test is identical to the equivalent 4-wire test, paragraph 3-5c(3), except for interface connections. The circuit under test is connected to the RECEIVE jack (2) and the auxiliary circuit is connected to the TRANSMIT jack (36). At the far-end repeat unit, the 2-wire circuit under test should be connected to the transmit jack and the auxiliary circuit should be connected to the receive jack. If connections have already been made for the near-end to far-end arrangement per paragraph 3-5c(4), proper interconnection can be accomplished in both the far-end 520B2 repeat unit and the near-end 520B2 master unit by setting the TRANSMIT FUNCTION switch (38) in both units to XFR.

d. P/AR Measurement. This measurement involves the generation and transmission of a precisely controlled, complex pulse train of known peak-to-average ratio. The P/AR signal is modified as a result if distortions encountered as it is transmitted over the circuit under test. A measurement of the peak-to-average value of the received pulse train will be indicative of the composite effect of delay distortion, frequency response, and echo delay of the circuit under test. The P/AR measurement is largely insensitive to noise, nonlinear distortion, and transient phenomena. This function is not included in Model 520B2-07.

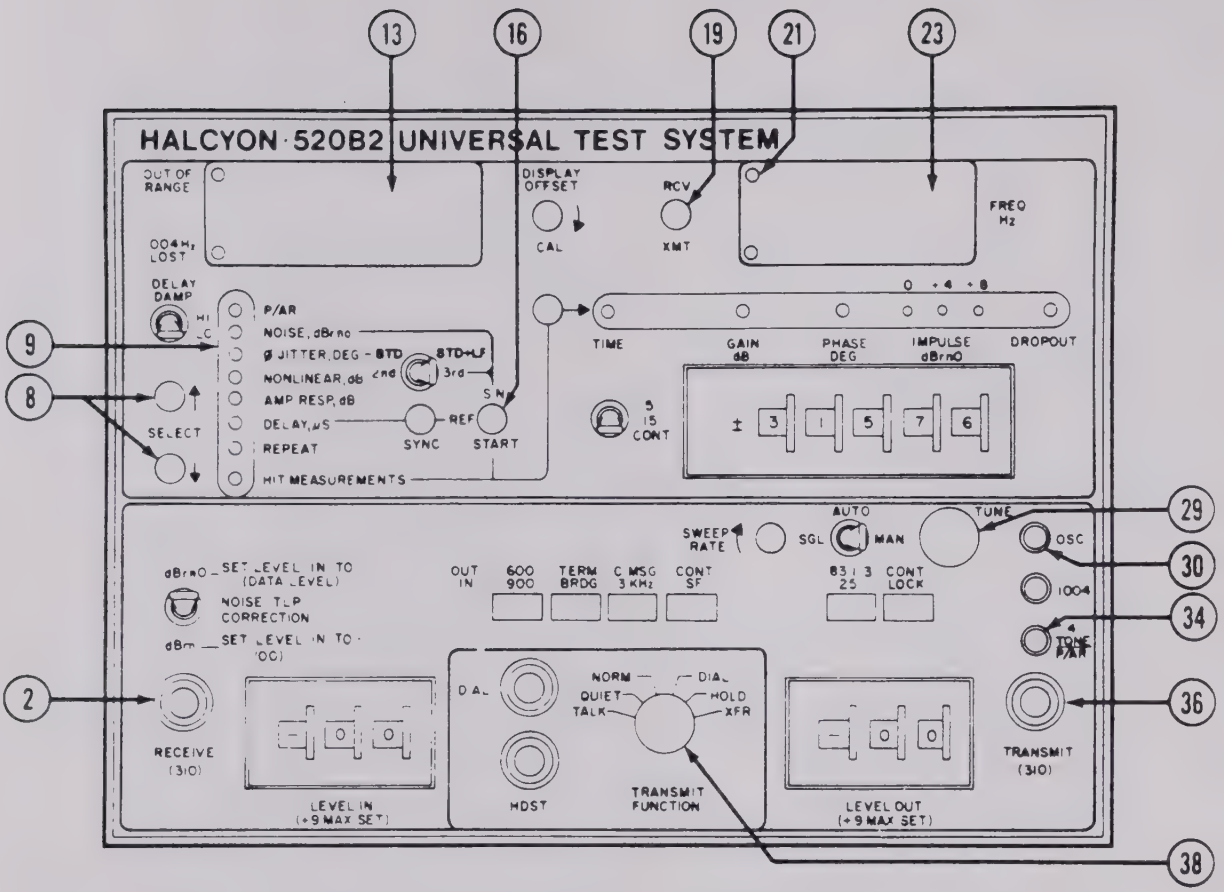

Figure 3-14. Delay Distortion and P/AR Measurement Controls

(1) Near-End to Far-End Measurements. (See figure 3-14.) The procedure for transmitting a P/AR test signal is as follows:

(a) Verify or perform initial setup procedures (paragraph 3-4). Connect near-end TRANSMIT to far-end RECEIVE.

(b) Use SELECT switches (8) to step mode indicator (9) to P/AR. Verify 4 TONE P/AR indicator (34) lights.

(c) Notify far-end operator that P/AR signal at -13 dBm0 is being sent.

(2) Far-End to Near-End Measurements. (See figure 3-14.) The procedure for measuring the received P/AR signal is as follows:

(a) Verify or perform initial setup procedures (paragraph 3-4). For 2-wire circuits (if connected to TRANSMIT jack) set TRANSMIT FUNCTION switch (38) to XFR.

(b) Use SELECT switches (8) to step mode indicator (9) to P/AR.

(c) Request far-end operator to transmit P/AR signal at -13 dBm0 level.

(d) Record P/AR value shown on primary display (13).

NOTE

P/AR ratings of about 50 or higher indicate that intersymbol interference due to delay distortion for medium-speed data

transmission (2400 bps) will be acceptable. For acceptable performance at speeds of 4800 bps and above, P/AR measurement values should fall in the range of 70 to 80 units or higher.

e. Noise Measurement. The 520B2 provides the capability for measuring idle-channel noise, noise-with-tone, and noise-to-ground.

Idle-channel noise, also commonly referred to as message-circuit noise, is the background noise present on a channel in the absence of an applied signal. The measurement is normally frequency weighted using a C-message weighting network and, when so made, the result is called C-message noise. C-message weighting offers relatively little attenuation to frequency components in the 1000- to 3000-Hz frequency range, but does significantly reduce the interfering effects of low-frequency components resulting from power-line induction. A 3-kHz flat weighting network is switch selectable to measure noise without attenuation of the low-frequency components. Idle-channel noise measurements are made with the far-end of the circuit terminated with a "quiet" termination.

Noise-with-tone, also referred to as C-notched noise when measured with C-message weighting, is measured with a 1004-Hz holding tone applied at the far end of the circuit, but notched out within the measuring set prior to the noise detector. The holding tone operates compandors and other signal-dependent devices of the circuit under test, thereby providing a measurement of signal-correlated noise. The 520B2 permits noise-with-tone measurements to be made with either C-message or 3-kHz weighting.

Noise-to-ground measurements using the 520B2 require the use of the optional Noise-to-Ground Adapter (figure 3-15). This measurement provides means for determining the magnitude of longitudinal

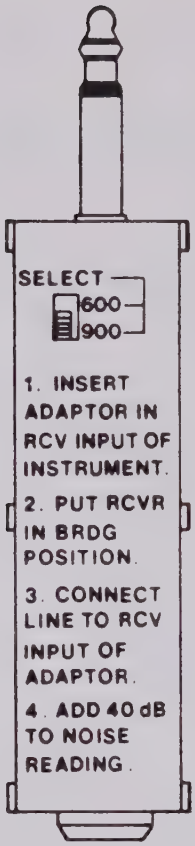

Figure 3-15. Noise-to-Ground Adapter (Halcyon PN 8220-0003-90)

(common-mode) voltages existing between the tip-ring signal pair and ground. This measurement is useful for determining the presence and magnitude of power-line induction. The measurement is expressed as an absolute dBrn value and can be made with either C-message or 3-kHz noise weighting.

(1) Idle-Channel Noise Measurement, Near-End to Far-End Procedure. (See figure 3-16.) The only requirement for the near-end operator in this test is to set TRANSMIT FUNCTION switch (38) to QUIET and notify the far-end operator to proceed with measurements.

(2) Idle-Channel Noise Measurement, Far-End to Near-End Procedure. (See figure 3-16.) The procedure for measuring idle-channel noise is as follows:

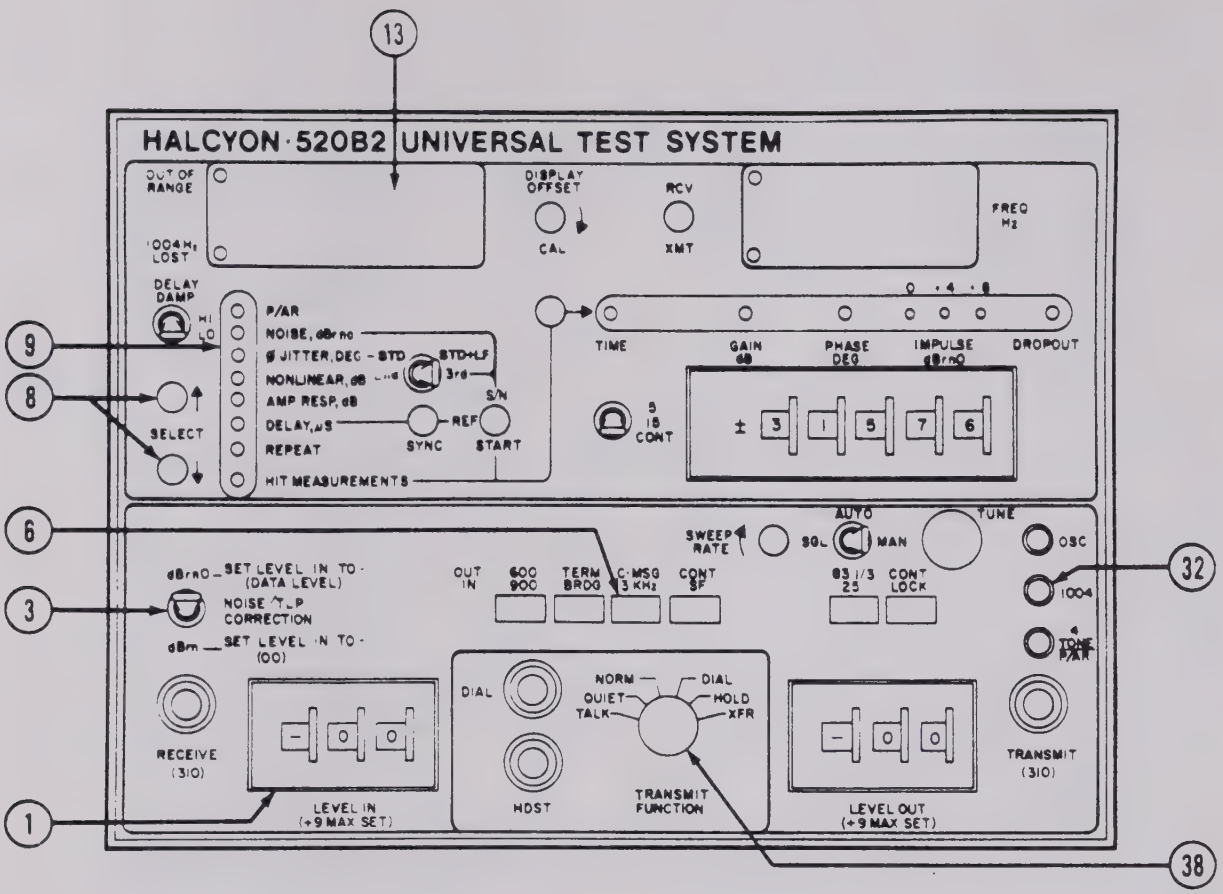

Figure 3-16. Noise Measurement Controls

(a) Verify or perform initial setup procedures (paragraph 3-4). Connect near-end TRANSMIT to far-end RECEIVE. If 2-wire circuits are being tested, set TRANSMIT FUNCTION switch (38) to XFR.

(b) Use SELECT switches (8) to step mode indicator (9) to NOISE, dBrnC.

(c) Request far-end operator to terminate his transmit line (quiet termination).

(d) Set C-MSG/3 KHz switch (6) to C-MSG (out) position.

(e) Read and record idle-channel noise as indicated in relative dBrnC on primary display (13). Representative noise objectives are as follows:

Circuit length (miles)	Noise (dBrncC)
50	31
100	34
400	37
1000	41
2500	45

(f) If absolute dBrn value is required, set LEVEL IN attenuator (1) to 00 and set NOISE/TLP CORRECTION switch (3) to dBrn (down) position. Read and record dBrn value indicated on primary display (13).

NOTE

After reading is taken, return the LEVEL IN attenuator to normal data level (13 dB below TLP) and set the NOISE/TLP CORRECTION switch to the dBrnC (up) position.

(g) If noise attributable to power-line interference is required, set C-MSG/3 KHz switch (6) to 3 KHz (in) position and repeat steps (e) and (f). The difference between the first and second readings is attributable to low-frequency interference.

NOTE

Return C-MSG/3 KHz switch (6) to the C-MSG (out) position before proceeding to any other measurements.

(3) Noise-with-Tone Measurement, Near-End to Far-End Procedure. (See figure 3-16.) The procedure for transmitting the C-notched noise signal is as follows:

(a) Verify or perform initial setup procedures (paragraph 3-4). Connect near-end TRANSMIT to far-end RECEIVE.

(b) Use SELECT switches (8) to step mode indicator (9) to NOISE, dBrn0. Verify 1004 indicator (32) lights.

(c) Inform far-end operator that 1004-Hz signal at -13 dBm0 is being sent.

(4) Noise-with-Tone Measurement, Far-end to Near-end Procedure. (See figure 3-16.) The procedure for measuring C-notched noise is as follows:

(a) Verify or perform initial setup procedures (paragraph 3-4). Connect far-end TRANSMIT to near-end RECEIVE.

(b) Use SELECT switches (8) to step mode indicator (9) to NOISE, dBrn0.

(c) Request far-end operator to transmit 1004-Hz holding tone at an applied level of -13 dBm0.

(d) Verify C-MSG/3 KHz switch (6) is in C-MSG (out) position.

(e) Depress RCV/XMT switch (19) so that receive indicator (21) lights.

(f) Verify FREQ Hz display (23) shows received frequency of approximately 1004 Hz.

(g) Record C-notched noise as indicated in relative dBrn0 on primary display (13). Recorded value should be less than 40.

(h) If absolute dBrn value is required, set LEVEL IN attenuator (1) to 00 and set NOISE/TLP CORRECTION switch (3) to dBrn (down) position.

NOTE

After reading is taken, return the LEVEL IN attenuator to normal data level (13 dB below TLP) and set the NOISE/TLP CORRECTION switch to the dBrn0 (up) position.

(i) If noise attributable to power-line interference is required, set C-MSG/3 KHz switch (6) to 3 KHz (in) position and repeat steps (g) and (h). The difference between the first and second readings is primarily attributable to low frequency interference.

NOTE

Return C-MSG/3 KHz switch (6) to the C-MSG (out) position before proceeding to any other measurements.

(j) If signal-to-noise ratio is required, repeat steps (g) and/or (h). When noise reading has been obtained, press S/N switch (16) to disable the notch filter. Display (13) will now show the holding tone level. Subtract the noise value from the tone value to obtain signal-to-noise ratio in dB. Signal-to-noise ratio must be 24 dB or greater.

(5) Noise-to-Ground Measurement, Near-End to Far-End Procedure. (See

figure 3-16.) The transmit function for this test is identical to idle-channel noise measurement, paragraph 3-5e(1).

(6) Noise-to-Ground Measurement, Far-End to Near-End Procedure. (See figure 3-17.) Noise-to-ground measurements at the receive end require the use of an optional adapter (figure 3-15). The measurement procedure is as follows:

(a) Verify or perform initial setup procedures (paragraph 3-4). Connect far-end TRANSMIT to near-end RECEIVE. For 2-wire circuits, set TRANSMIT FUNCTION switch (38) to XFR.

(b) Use SELECT switches (8) to step mode indicator (9) to NOISE, dBrn0.

(c) Request far-end operator to apply a "quiet" termination as a transmit signal.

(d) Set C-MSG/3 KHz switch (6) to C-MSG (out) position.

(e) Set adapter impedance switch to match position selected for 600/900 switch (4).

(f) Set TERM/BRDG switch (5) to BRDG (in) position.

(g) Set LEVEL IN attenuator (1) to 00 and set NOISE/TLP CORRECTION switch (3) to dBrn (down) position.

(h) Insert adapter into RECEIVE jack (2).

(i) Connect line to RCV input on adapter.

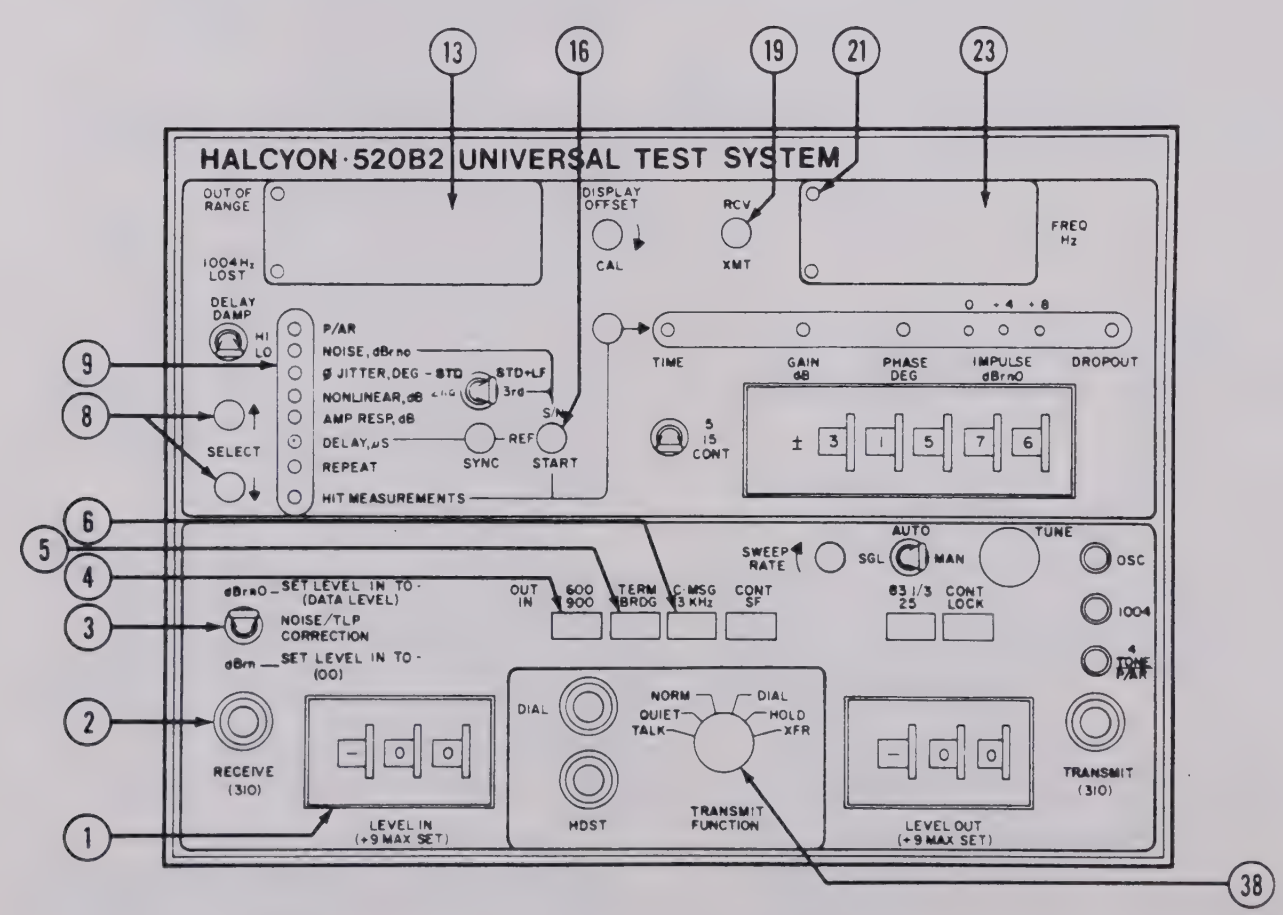

Figure 3-17. Noise-to-Ground Measurement Controls

(j) Add +40 dB to value indicated on primary display (13) and record result as absolute dBrn measurement.

(k) If noise to ground with 3-kHz weighting is desired, set C-MSG/3 KHz switch (6) to the 3 KHz (in) position and repeat step (j).

NOTE

After reading is taken, return the LEVEL IN attenuator to normal data level (13 dB below TLP), set the NOISE/TLP CORRECTION switch to the dBrn0 (up) position, and return the TERM/BRDG switch to the TERM (out) position. Return the C-MSG/3 KHz switch (6) to the C-MSG (out) position before proceeding to any other measurements.

f. Phase Jitter Measurement. Phase jitter is measured by applying a precise holding tone at one end of the circuit under test and measuring the cumulative effect of incidental phase modulation and additive tones or noise on the zero crossings of the holding tone as it is received at the measurement end. The peak-to-peak deviations of the zero crossings are band-limited after detection to minimize the influence of additive noise on the measurement. Measurement bandwidth is restricted to jitter components within the range of 20 Hz to 300 Hz. Another switch-selectable range responsive to low-frequency phase jitter provides a measurement bandwidth of 4 Hz to 300 Hz.

(1) Near-End to Far-End Measurements. (See figure 3-18.) The procedure for transmitting a phase jitter test tone is as follows:

(a) Verify or perform initial setup procedures (paragraph 3-4). Connect near-end TRANSMIT to far-end RECEIVE.

(b) Use SELECT switches (8) to step mode indicator (9) to Ø JITTER, DEG. Verify 1004 indicator (32) lights.

(c) Notify far-end operator that phase jitter 1004-Hz test tone at -13 dBm0 is being sent.

(2) Far-End to Near-End Measurement. (See figure 3-18.) The procedure for measuring phase jitter is as follows:

(a) Verify or perform initial setup procedures (paragraph 3-4). Connect near-end RECEIVE to far-end TRANSMIT. For 2-wire circuits set TRANSMIT FUNCTION switch (38) to XFR.

(b) Use SELECT switches (8) to step mode indicator (9) to AMP RESP, dB.

(c) Depress RCV/XMT switch (19) so that receive indicator (21) lights.

(d) Request far-end operator to transmit 1004-Hz phase jitter test tone at -13 dBm0.

(e) Verify that primary display (13) indicates an acceptable level for circuit under test. FREQ Hz display (23) should indicate 1004 Hz (within allowable frequency translation limits).

(f) Use SELECT switches (8) to step mode indicator (9) to Ø JITTER, DEG. Verify 1004 indicator (32) lights.

(g) Set STD/STD+LF switch (14) to STD in order to measure phase jitter in the 20- to 300-Hz range. Read and record phase jitter value in degrees peak-to-peak as registered on primary display (13). This value should be less than 5 degrees.

(h) To measure phase jitter in the 4- to 20-Hz range, alternate switch (14) between its STD and STD+LF positions. Any difference between displayed phase jitter values is attributable to jitter in the 4- to 20-Hz range.

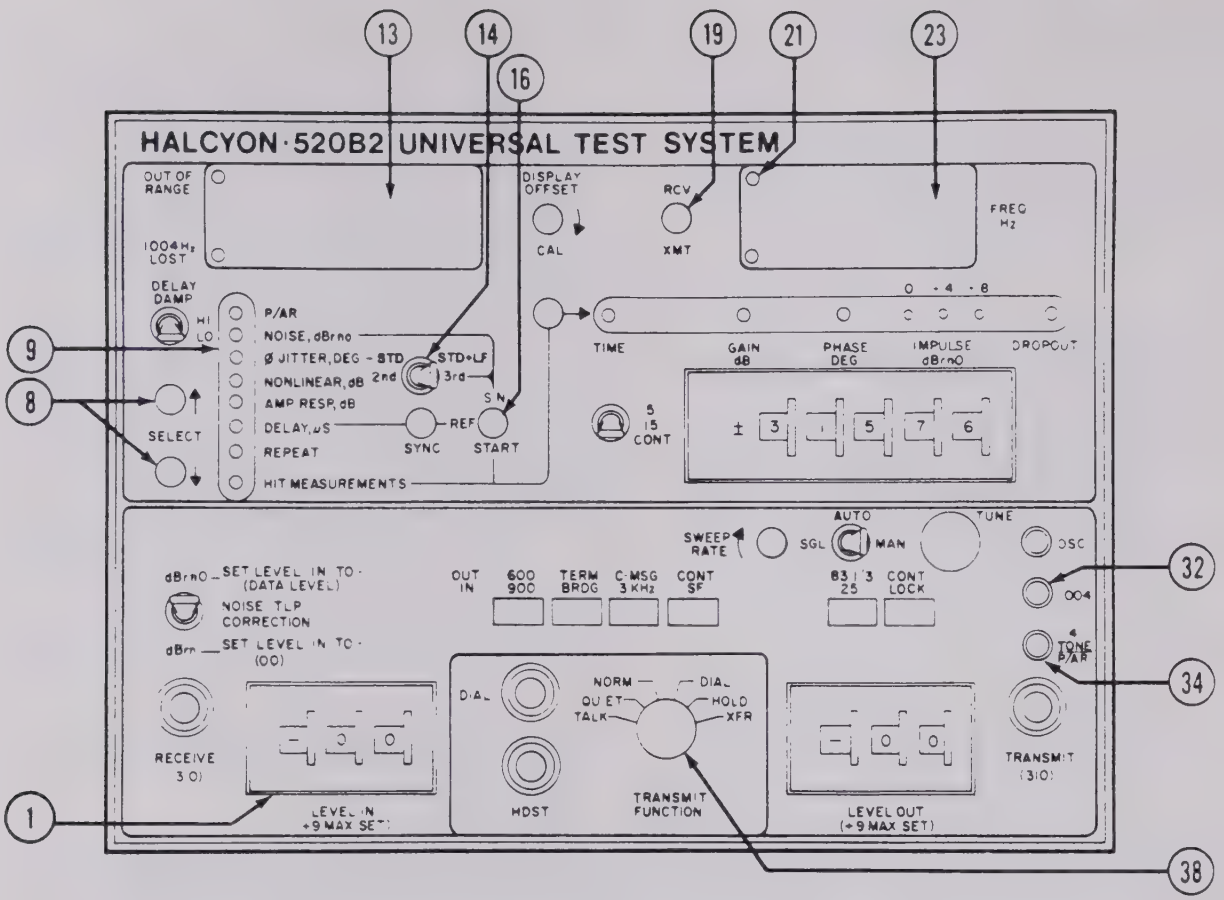

Figure 3-18. Phase Jitter and Nonlinear Distortion Measurement Controls

g. Nonlinear Distortion Measurement. Nonlinear distortion is measured by applying two pairs of tones (tone pair A and tone pair B) at one end of the circuit and measuring 2nd-order (A-B and A+B) components and 3rd-order (2A-B) components at the other end. The B pair are 6 Hz apart, centered at 860 Hz. The A pair are 16 Hz apart, centered at 1380 Hz. All four tones are applied at equal levels with the composite level equal to data level.

At the receiver, the A-B and A+B 2nd-order components are separated by narrow passband filters centered at 520 Hz and 2240 Hz, detected, and the results summed and expressed as the 2nd-order measurement. The 2A-B 3rd-order components are similarly passed through a narrow passband filter centered at 1900 Hz, detected, and displayed as the 3rd-order measurement. Both the 2nd- and 3rd-order measurement results are expressed in dB below the composite rms value of the received four-tone test signal.

To correct marginal readings for the effects of noise contributions, a S/N mode is provided. When this mode is activated, the transmission of one tone pair is disabled and the level of the remaining tone pair is increased by 3 dB so as to maintain the same composite rms level as for the four-tone test signal. At the receiving unit, any residual measurement value indicated is due to noise contribution and can be used to correct the 2nd- and 3rd-order distortion measurement values as described in the following paragraph.

(1) Near-End to Far-End Measurements. (See figure 3-18.) The near-end (transmitting) procedure is as follows:

(a) Verify or perform initial setup proceedures (paragraph 3-4). Connect near-end TRANSMIT to far-end RECEIVE.

(b) Use SELECT switches (8) to step mode indicator (9) to NONLINEAR, dB. Verify that 4 TONE P/AR indicator (34) lights.

(c) Notify far-end operator that you are sending the 4-tone test signal at an applied level of -13 dBm0, and to proceed with nonlinear distortion measurements.

(d) When requested by the far-end operator, press s/n switch (16) to allow noise contribution to be determined at far end. Readings should be in accordance with parameters of system under test.

(2) Far-End to Near-End Measurements.

(a) Nonlinear Distortion, Far-End to Near-End.

1. Verify or perform initial setup procedures (paragraph 3-4). For 2-wire circuits (if connected to TRANSMIT jack) set TRANSMIT FUNCTION switch (38) to XFR.

2. Use SELECT switches (8) to step mode indicator (9) to AMP RESP, dB.

3. Request far-end operator to send 4 tone signal at -13 dBm0.

4. Verify that received signal (13 is at approximate expected level. The signal level is automatic-gain-controlled for this test and needs only to be within ±8 dB of the equivalent value of LEVEL IN attenuator setting (1).

5. Use SELECT switches (8) to step mode indicator (9) to NON-LINEAR dB.

6. Set 2nd/3rd order switch (14) to 3rd. Position.

7. Read and record value indicated on primary display (13). This represents the uncorrected 2nd-order distortion measurement value.

8. Set 2nd/3rd order switch (14) to 3rd. Position.

9. Read and record value indicated on primary display (13). This represents the uncorrected 3rd-order distortion measurement value.

10. Request far-end operator to switch his transmitter signal mode so as to send the S/N test signal. This will now allow the noise contribution to be determined.

11. Read and record noise value shown on primary display (13). The indicated value may be used to correct the 3rd-order distortion measurement reading obtained in step 9 above. This is typically done only when the uncorrected reading is marginal or slightly below acceptable limits. The correction procedure is as follows:

a. Determine the difference between values obtained in steps 9 and 11.

b. Use the diffenence value to obtain a correction factor from the graph in figure 3-19.

c. Add the correction factor to the value obtained in step 9. The result is the true 3rd-order non-linear distortion in terms of dB below the transmitted tone level.

12. Return the 2nd/3rd-order switch (14) to 2nd position.

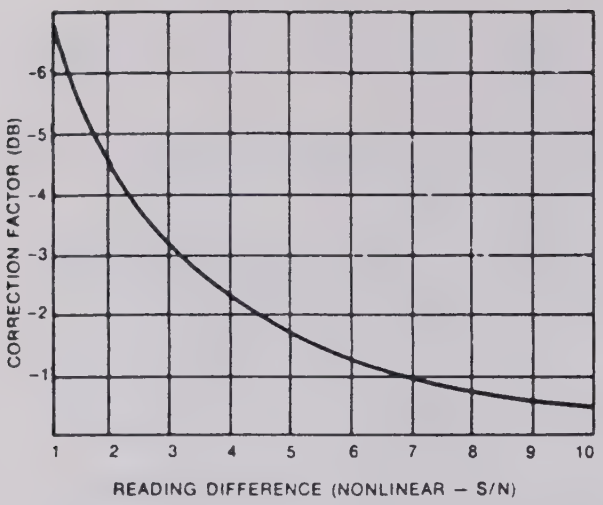

DIFFERENCE (dB)	1	2	3	4 5	6 - 9
CORRECTION (dB)	7	5	3	2	1

Licensed under U.S. Patent # 3,862,380

Figure 3-19. Nonlinear Distortion Correction

13. Read and record 2nd-order noise value on primary display.

14. Correct the 2nd-order distortion value on primary display.

(b)

THIS SECTION OMITTED

NOTE

At completion of measurements, return DISPLAY OFFSET control (17) to CAL position, return LEVEL IN attenuator (1) to expected receive data level position, and return C-MSG/3 KHz switch (6) to C-MSG (out) position.

h. Hit Measurement. Transient impairments, consisting of gain hits, phase hits, dropouts, and three-level impulse noise perturbations are measured using a holding tone applied at the far end of the circuit. The holding tone frequency should be within the range of 995 Hz to 1025 Hz and should be applied at -13 dBm0 data level. The holding tone serves to dynamically load the circuit under test and also functions as a reference level for the hit measurements.

The 520B2 incorporates individual counting registers for each of the hit parameters, including three separate registers for impulse-noise measurements. Counting circuitry is interrelated so as to inhibit all other transient functions for 143 milliseconds plus the duration of a dropout. Similarly, the occurrence of a gain hit or phase hit will inhibit impulse noise-counting circuitry for 143 milliseconds

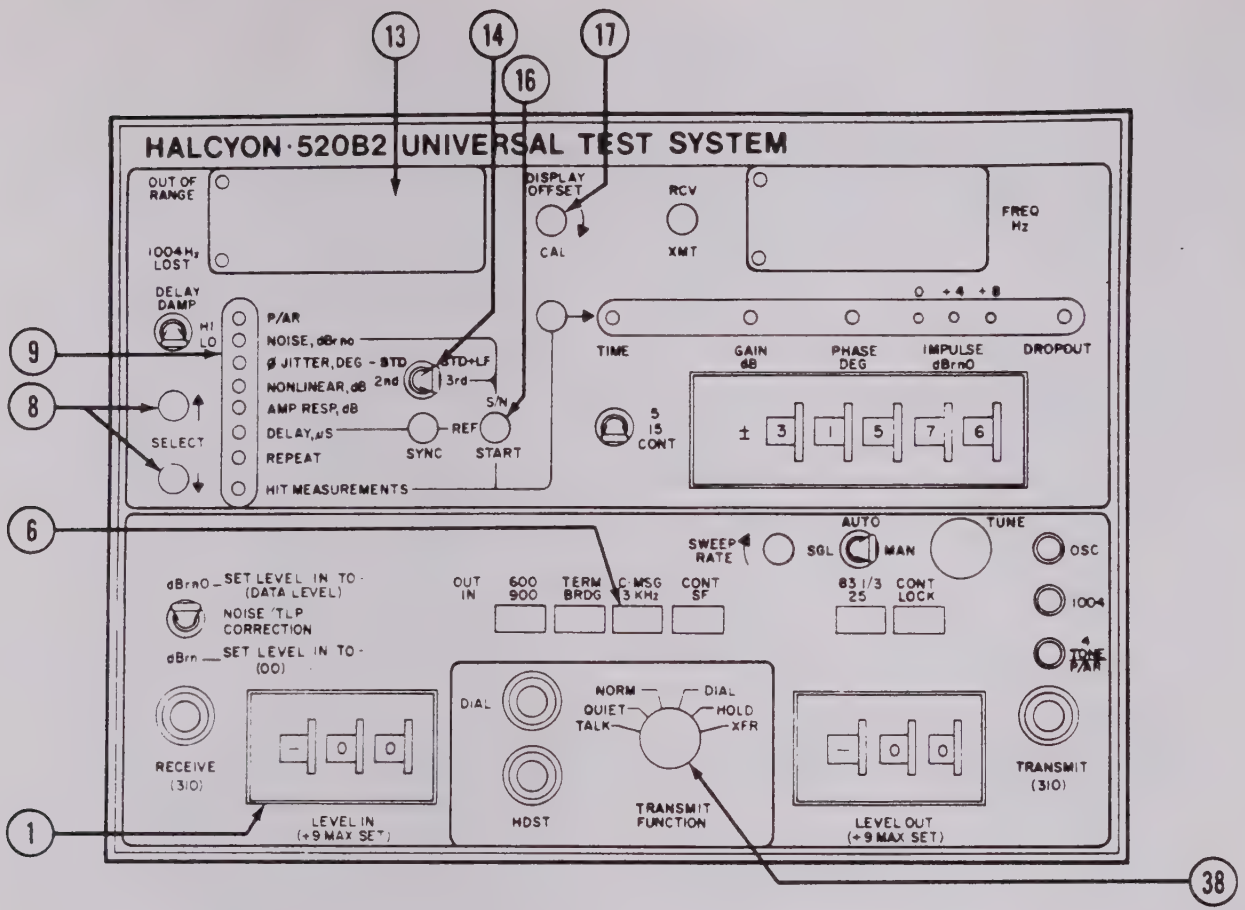

Figure 3-20. Nonlinear Distortion Measurement Controls (Manual Gain Control)

plus the duration of each hit. Gain hits, phase hits, and dropouts must have a duration of 4 milliseconds or longer to be counted. Transients of a shorter duration are classified as impulse noise and will be counted accordingly if the event magnitude exceeds the selected impulse-noise threshold values. The maximum counting rate for each respective hit function is limited to 7 counts per second.

Switch-selectable threshold values are provided for gain hits, phase hits, and impulse noise. The selected threshold value of 40 through 99 dBrn0 for impulse noise applies to the count register designated "0". The selected "0" register threshold is relative to the equivalent setting of the LEVEL IN and NOISE/TLP CORRECTION switches. By following the setup procedures outlined below, the threshold settings of the IMPULSE switch are automatically referenced to the TLP for the point of measurement and represent dBrn0 values. The threshold values for the other two impulse noise count registers are +4 dB and +8 relative to the selected threshold value for the "0" register. The dropout threshold is fixed at a value of 12 dB below the equivalent setting of the LEVEL IN attenuator.

(1) Near-End to Far-End Measurements. (See figure 3-21.) The procedure for transmitting the hit measurements test tone is as follows:

(a) Verify or perform initial setup procedures (paragraph 3-4).

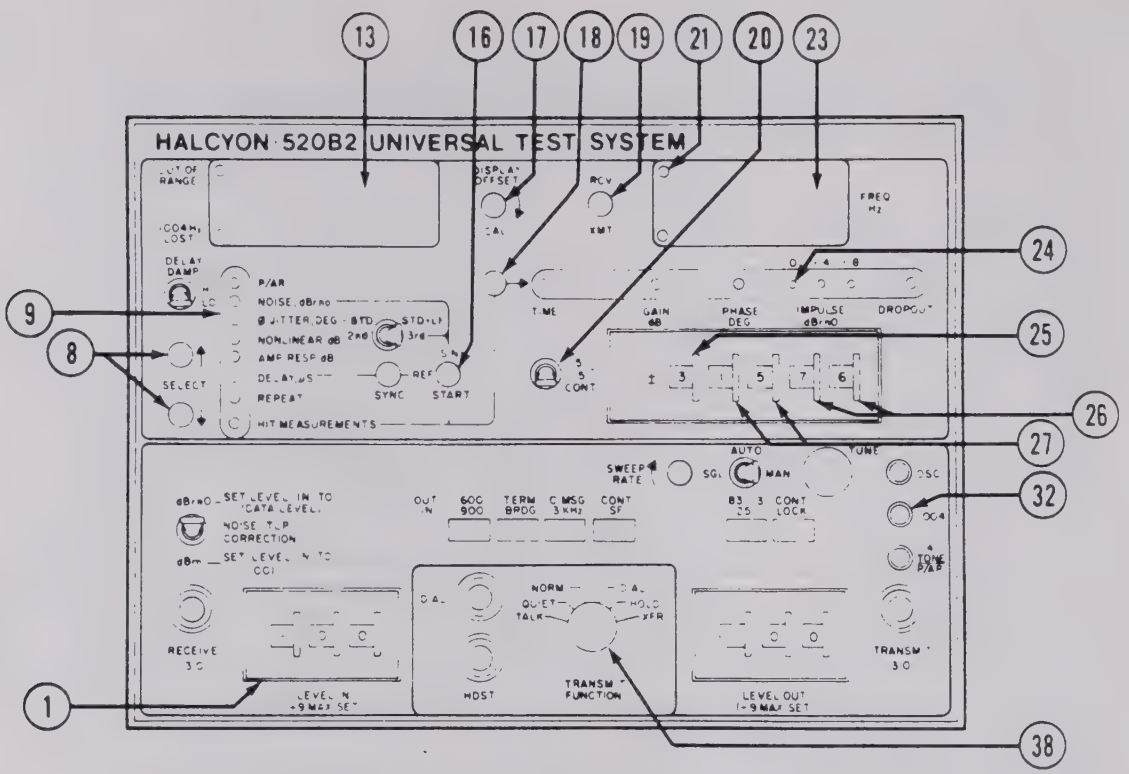

Figure 3-21. Hit Measurement Controls

Connect near-end TRANSMIT to far-end RECEIVE.

(b) Use SELECT switches (8) to step mode indicator (9) to HIT MEASUREMENTS. Verify that 1004 indicator (32) lights.

(c) Notify far-end operator that you are now transmitting a 1004-Hz holding tone at an applied level of -13 dBm0 and to proceed with the hit measurements test.

(2) Far-End to Near-End Measurements. (See figure 3-21.) The procedure for measuring transient impairments is as follows:

(a) Verify or perform initial setup procedures (paragraph 3-4). Connect far-end TRANSMIT to near-end RECEIVE. For 2-wire circuits set TRANSMIT FUNCTION switch (38) to XFR.

(b) Use SELECT switches (8) to step mode indicator (9) to AMP RESP, dB.

(c) Depress RCV/XMT switch (19) so that receive indicator (21) lights.

(d) Request far-end operator to transmit 1004-Hz holding tone at -13 dBm0.

(e) Verify received data level (13) is within allowable deviation as specified in test practice for circuit being tested. Received holding tone frequency indicated on FREQ Hz display (23) should be 1004 Hz or within the limits of allowable frequency translation.

(f) Adjust LEVEL IN attenuator (1) to bring primary display (13) as close to zero reading as possible. Note and record the amount added to or subtracted from the previous attenuator setting to achieve a zero reading. This plus or minus value will be used later to establish impulse-noise thresholds.

NOTE

Do not use DISPLAY OFFSET control (17) to achieve a zero reading. This control must remain in the full clockwise CAL position.

(g) Use SELECT switches (8) to step mode indicator (9) to HIT MEASUREMENTS.

(h) Refer to the parameters of the system under test for specified gain-hit, phase-hit, and impulse-noise thresholds.

(i) Set gain-hit threshold using thumbwheel switch (25).

(j) Set phase hit threshold (5 degrees minimum) using thumbwheel switches (27).

(k) Set impulse-noise threshold using thumbwheel switches (26). Since the dBrn0 impulse-noise threshold switch selections are referenced to the TLP, corrections for the LEVEL IN attenuator offset must be applied using the values derived in step (f) above. If a plus value was derived in step (f), the value must be subtracted from the specified threshold setting. Conversely, if a minus value was derived, the value is added. For example:

LEVEL IN setting		Step (f) correction	Specified threshold	Actual threshold
Expected	Actual			
-6	-4	+2	80	78
-6	-8	-2	80	82

(m) Set 5/15/CONT switch (20) to test period required (5 minutes, 15 minutes, or continuous).

(n) Initiate test by pressing START switch (16).

(p) Press switch (18) to advance indicator (24) to TIME. Primary display (13) will now show elapsed test time in minutes. Verify that TIME indicator (24) is flashing, showing that the test timing interval is in progress. This indicator will continue flashing (when selected) throughout the test counting period. At the conclusion of the selected 5- or 15-minute period, it will assume a steady on condition signifying that the test has been completed.

(q) To view the various hit registers, press switch (18) to sequentially advance indicator (24) to the transient of interest. The contents of the selected register will now appear on primary display (13).

NOTE

Monitoring the hit registers in this manner does not affect the test in any way. Transient events will still be accumulated in the registers and the test time will continue incrementing until the specific time period (5 or 15 minutes) is complete.

(r) At the conclusion of the test period, press switch (18) to advance indicator (24) through each register. Record test time and value displayed (13) for each transient event.

NOTE

Return LEVEL IN attenuator (1) to data level (13 dB below TLP) before proceeding to any other tests.

i. Repeat Mode Measurement. The repeat mode provides means for making two-way end-to-end measurements of frequency response and delay distortion, with measurement results for both directions of transmission displayed by the far-end master unit.

In Repeat Mode Far-End to Near-End Frequency Response Measurements, the far-end master unit transmits a

fixed-level, unmodulated test signal which may be tuned across the frequency range of the circuit under test. Variations of the received signal level are detected by the near-end repeat unit and used to directly control the level of its oscillator output. The repeat unit oscillator is tuned to a fixed frequency and applied to a return circuit for transmission back to the far-end master unit. Level variations detected and displayed on the master unit represent differences in attenuation values for the circuit under test as the master unit oscillator is tuned across the circuit passband. A plot of received level at the master unit versus its transmitted frequency will show the frequency response of the test circuit for the far-end to near-end direction of transmission.

NOTE

The repeat mode should only be used for frequency response tests when measurements for both directions of transmission are to be observed at the far-end master unit. Repeat mode operation also should be restricted to the test direction specified in the above application. Frequency response measurements for the opposite direction of transmission should be performed with 520B2 units at both ends of the circuit, using the AMP RESP mode detailed under paragraph 3-5b(1). When using the repeat mode for tests on compandored circuit facilities, consideration should be given to potential measurement errors resulting from improper compandor tracking.

In Repeat Mode Far-End to Near-End Delay Distortion Measurements, the far-end master unit transmits a fixed-level modulated test signal which may be tuned across the frequency range of the circuit under test. The modulation envelope extracted from the received signal by the repeat unit contains phase changes occurring as the test signal is tuned across the passband of the circuit under test. These phase changes are repeated back to the master unit by reapplying the extracted envelope so as to modulate a fixed-frequency tone generated within the repeat unit and transmitted back to the master unit on a return circuit. These phase changes may be detected by the master unit, and when displayed or plotted relative to the frequency of the master unit's variable oscillator, represent the delay distortion of the circuit under test for the far-end to near-end direction of transmission.

The Repeat Mode Near-End to Far-End Delay Distortion Measurements are similar to the measurements described above except that the master unit modulated signal is transmitted at a fixed frequency and the repeat unit test signal is tuned across the passband of the return circuit under test. A plot of the phase changes of the modulation envelope received and detected by the far-end master unit, versus the carrier frequency of the same test signal, represents the delay distortion of the circuit under test for the near-end to far-end direction of transmission.

(1) Repeat Mode — Frequency Response Measurements, Far-End to Near-End. (See figure 3-22.) Near-end (repeat unit) operating procedures for this test are as follows:

(a) Verify or perform initial setup procedures (paragraph 3-4). Connect far-end TRANSMIT to near-end RECEIVE and near-end TRANSMIT to far-end RECEIVE.

(b) Use SELECT switches (8) to step mode indicator (9) to REPEAT. Verify OSC indicator (30) lights.

(c) Depress RCV/XMT switch (19) so that transmit indicator (22) lights.

(d) Set CONT/LOCK switch (33) to LOCK (in) position.

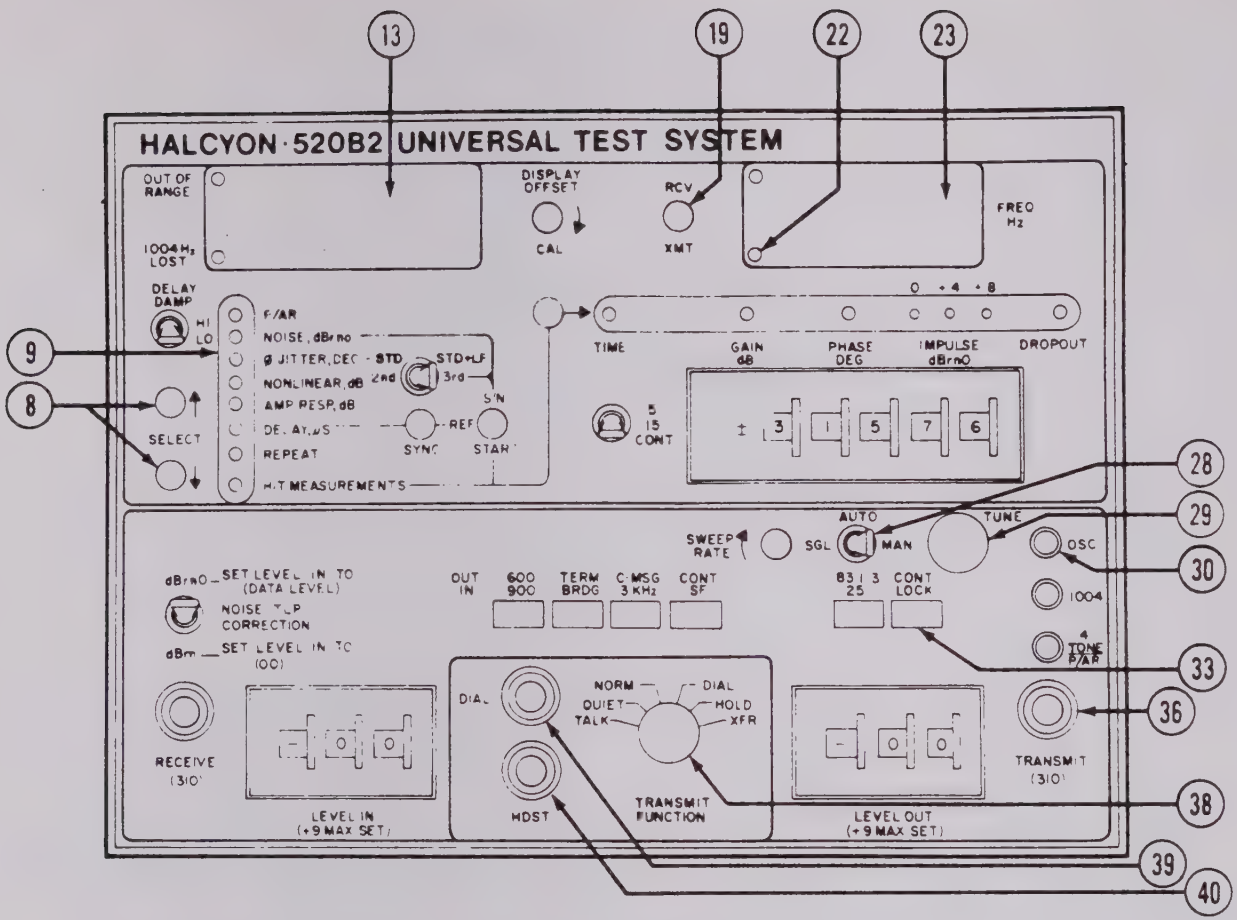

Figure 3-22. Repeat Mode Measurement and Dial, Hold, and Talk Controls

(e) Set SGL/AUTO/MAN switch (28) to MAN.

(f) Adjust TUNE control (29) for a reading of 1204±1 Hz on FREQ Hz display (23).

(g) Depress RCV/XMT switch (19). Verify that FREQ Hz display (23) shows approximate frequency transmitted by far-end master unit.

(h) Primary display (13) in this mode displays level of signal applied to the RECEIVE jack relative to its LEVEL IN attenuator setting. Verify that this level is within allowable limits.

(i) Instruct far-end operator to proceed with frequency response measurements.

(2) Repeat Mode — Delay Distortion Measurements, Far-End to Near-End. (See figure 3-22.) Operating procedures for this test are identical to those required for frequency response tests in the repeat mode, paragraph (1) above.

(3) Repeat Mode — Delay Distortion Measurements, Near-End to Far-End. (See figure 3-22.) Near-end procedures for this test are as follows:

(a) Verify or perform initial setup procedures (paragraph 3-4). Connect far-end TRANSMIT to near-end RECEIVE and near-end TRANSMIT to far-end RECEIVE.

(b) Use SELECT switches (8) to step mode indicator (9) to REPEAT. Verify OSC indicator (30) lights.

(c) Depress RCV/XMT switch (19) so that transmit indicator (22) lights.

(d) Set SGL/AUTO/MAN switch (28) to MAN.

(e) Adjust TUNE control (29) for a reading of 1804±1 Hz on FREQ Hz display (23).

(f) Depress RCV/XMT switch (19). Verify that FREQ Hz display shows approximate frequency being transmitted by the far-end master unit.

(g) Primary display (13) in this mode displays level of signal applied to RECEIVE jack relative to the LEVEL IN attenuator setting. Verify that this level is within allowable limits.

(h) Instruct far-end operator to normalize display for zero delay.

(i) At request of far-end operator, tune to each test frequency specified for the system under test.

(j) Far-end operator will read and record delay variations corresponding to each test frequency.

j. Dial, Hold, and Talk Procedures. (See figure 3-22.)

(1) The 520B2 provides two-wire dial, hold, and transfer functions for use in testing loop-dial transmission facilities. The procedure is as follows follows:

(a) Connect two-wire line to TRANSMIT jack (36).

(b) Connect dialset to DIAL jack (39), set TRANSMIT FUNCTION switch (38) to DIAL, and dial the test number.

(c) When circuit under test has been seized, set TRANSMIT FUNCTION switch to HOLD and make transmit measurements. The DIAL jack will be disconnected in this position.

(d) Set TRANSMIT FUNCTION switch to XFR to make receive measurements. This interchanges the receiver and transmitter behind the jacks and the hold coil.

(2) The 520B2 has provision for conversing on the four-wire line connected to the test set. The procedure is as follows:

(a) Connect a hand/head set to HDST jack (40).

(b) Set TRANSMIT FUNCTION switch (38) to TALK position. This supplies talk battery to the microphone and connects the earphone to the receiver.

3-6. OSCILLOSCOPE DISPLAY PROCEDURES. The 500B Mainframe contains a dual-memory storage oscilloscope to facilitate attenuation distortion (frequency response) and delay distortion (envelope delay) measurements. In addition, a Signal Impairment Display (SID) capability allows rapid detection and visual analysis of signal impairment caused by gain hits, noise, phase jitter, amplitude jitter, or nonlinear distortion.

a. Oscilloscope Setup. (See figure 3-23.)

(1) Initial Procedure.

(a) Set MODE switch (46) to INPUT.

(b) Adjust INTENSITY (45) and FOCUS (44) as required for sharp image on screen.

(c) Adjust ILLUM (43) to backlight calibration markings on graticule.

(d) Observe real-time display on screen and make any necessary adjustments to the 520B2 (single or auto sweep, sweep rate, etc.).

(2) Clearing the Memory.

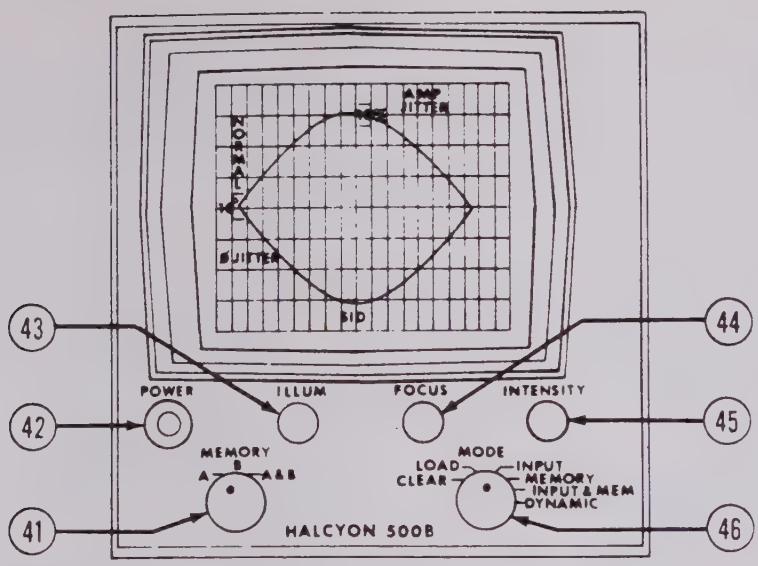

Figure 3-23. Oscilloscope Display Controls

(a) Set MEMORY switch (41) to required memory position (A, B, or A & B).

(b) Set MODE switch (46) to CLEAR. Wait until display retraces to lower left corner of screen.

(c) Set MODE switch to MEMORY. Verify that selected memory is cleared (baseline established at bottom line of graticule).

(d) Return MODE switch to CLEAR position.

(3) Loading the Memory.

(a) Set MODE switch (46) to LOAD position.

(b) If single sweep is being used, initiate sweep by momentarily switching the SGL/AUTO/MAN switch (28, figure 3-22) to AUTO, then back to SGL.

(c) If AUTO sweep is being used, the memory contents will be updated on each new sweep.

(d) When a complete response curve has been loaded, rotate MODE switch to MEMORY position to view the stored data.

(4) Real-Time Input and Memory. This mode allows a stored curve to be compared with real-time input data.

(a) Clear and load memory A or B in accordance with paragraphs (2) and (3) above.

(b) Rotate MODE switch (46) to INPUT and MEM position. Deviations in real-time data can now be compared to data stored in the selected memory.

(5) Dynamic Storage. This mode allows data stored in memory A to be compared with data stored in memory B. Memory A is displayed on a non-destruct basis while memory B is updated continuously.

(a) Clear and load memories A & B in accordance with paragraphs (2) and (3) above.

(b) Rotate MODE switch (46) to DYNAMIC position. Memory A trace will remain static. Memory B trace will be updated dynamically (previously stored data will be cleared as new data is entered).

b. Attenuation Distortion Measurement.

(1) Near-End to Far-End Measurement. (See figure 3-24.) The procedure for this transmit-only measurement is as follows:

(a) Perform procedures in paragraph 3-5b(1), steps (a) through (g).

(b) Set SGL/AUTO/MAN switch (28) to SGL position.

(c) Set CONT/LOCK switch (33) to CONT (out) position.

(d) Notify far-end operator to prepare for single sweep.

(e) When far-end operator is ready, initiate single sweep by setting SGL/AUTO/MAN switch (28) momentarily to AUTO, then back to SGL position.

(2) Far-End to Near-End Measurement. (See figures 3-12, 3-23, and 3-25.) The procedure for this receive-only measurement is as follows:

(a) Perform procedures in paragraph 3-5b(3), steps (a) through (f).

(b) Clear selected memory bank and prepare to load one complete sweep; see paragraphs 3-6a(2) and (3).

(c) Instruct far-end operator to initiate single sweep.

(d) When a complete response plot is stored, set oscilloscope MODE switch (46) to MEMORY position. Stored memory plot will now be displayed.

(e) Return DISPLAY OFFSET control (17) to CAL position.

(f) Verify that LEVEL IN attenuator (1) is set to expected receive data level position.

c. Repeat Mode — Attenuation Distortion Measurement. (See figures 3-12, 3-23, and 3-25.)

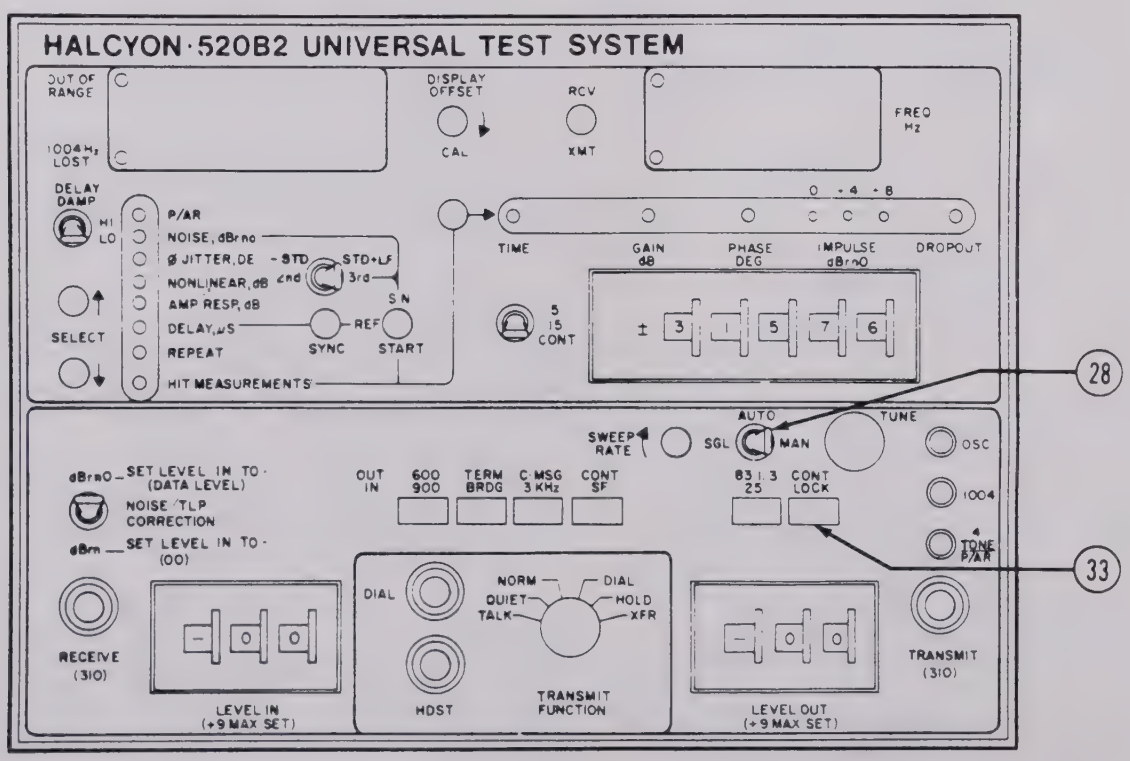

Figure 3-24. Oscilloscope Attenuation Distortion Measurement Controls

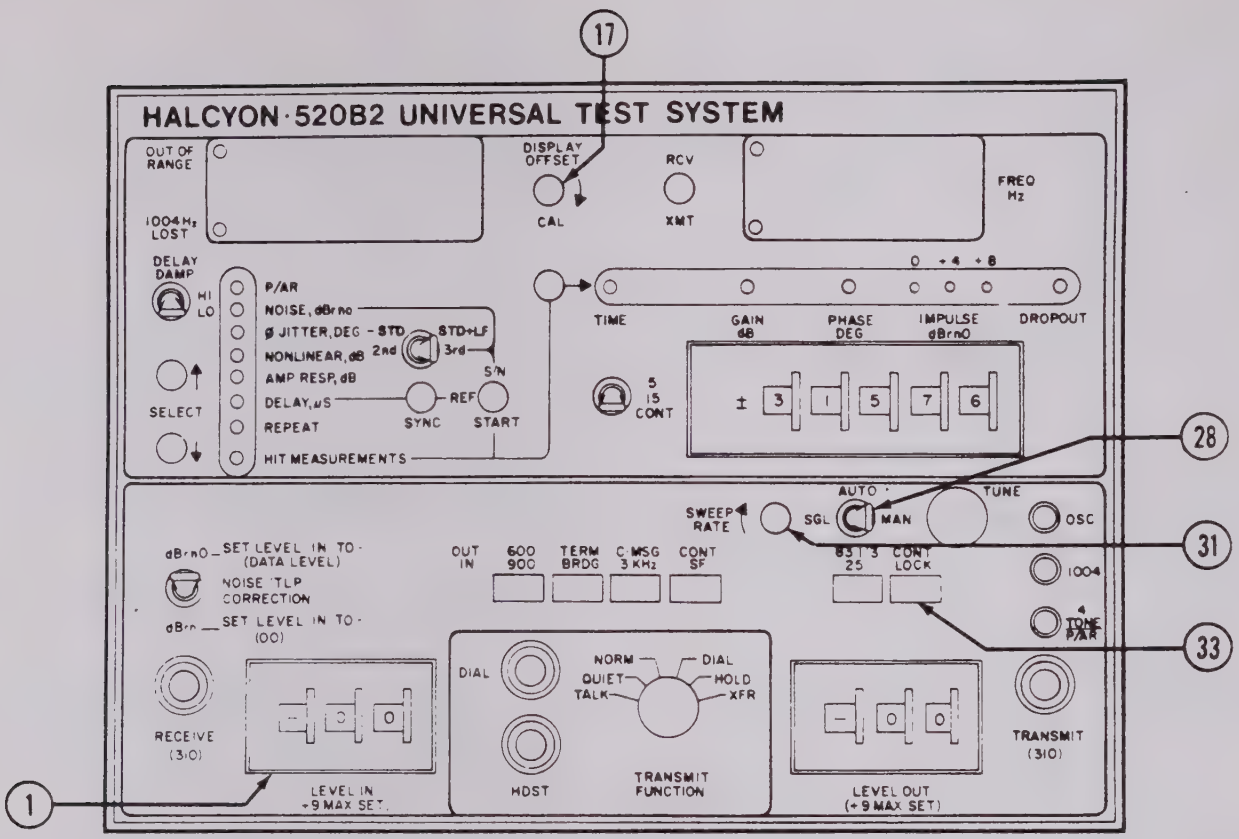

Figure 3-25. Oscilloscope Attenuation and Delay Distortion Measurement Controls

(1) Near-End to Far-End Measurement (Far End in Repeat Mode): The procedure for this repeat measurement is as follows:

(a) Perform procedures in paragraph 3-5b(2), steps (a) through (k).

(b) Set SGL/AUTO/MAN switch (28) to SGL position.

(c) Set CONT/LOCK switch (33) to CONT (out) position.

(d) Adjust SWEEP RATE control (31) for a slow sweep (approximately midrange).

(e) Clear selected memory bank and prepare to load one complete sweep; see paragraphs 3-6a(2) and (3).

(f) Initiate single sweep by setting SGL/AUTO/MAN switch (28) momentarily to AUTO, then back to SGL.

(g) When a complete response plot is stored, set oscilloscope MODE switch (46) to MEMORY position. Stored response plot will now be displayed.

(h) Return DISPLAY OFFSET control (17) to CAL position.

(i) Verify LEVEL IN attenuator (1) is at expected receive data level position.

(2) Far-End to Near-End Measurement. Repeat mode is not required for far-end to near-end attenuation distortion measurement. The standard end-to-end measurement procedure is used for this test; refer to paragraph 3-6b(2).

d. Delay Distortion Measurement. (See figures 3-13, 3-23, and 3-25.)

(1) Loop Measurement. The procedure for loop measurement is as follows:

(a) Perform procedures in paragraph 3-5c(1), steps (a) thru (h).

(b) Set SGL/AUTO/MAN switch (28) to SGL position.

(c) Verify CONT/LOCK switch (33) is at CONT (out) position.

(d) Adjust SWEEP RATE control (31) for a slow sweep (approximately midrange).

(e) Clear selected memory bank and prepare to load single sweep; see paragraphs 3-6a(2) and (3).

(f) Initiate single sweep by setting SGL/AUTO/MAN switch (28) momentarily to AUTO, then back to SGL.

(g) When a complete plot is stored, set oscilloscope MODE switch (46) to MEMORY position. Stored delay plot will now be displayed.

(2) Near-End to Far-End Measurement, Four-Wire Circuit (Far End in Repeat Mode). The procedure for testing "forward" line from the near-end unit is identical to the requirements for loop tests; see paragraph (1) above. The far-end unit (in Repeat mode) must have the output level properly adjusted to -13 dBm0 and typically have its oscillator set to a frequency of 1204±1 Hz. Before the actual delay tests are started, the far-end operator should verify that the received test signal level is within allowable range.

(3) Far-End to Near-End Measurement, Four-Wire Circuit (Far End in Repeat Mode). The procedure for this "return" line measurement is as follows:

(a) Perform measurement procedure in accordance with paragraph 3-5c(3), steps (a) thru (p).

(b) Notify far-end operator to set up far-end 520B2 unit as follows:

1. Set SGL/AUTO/MAN switch (28) to SGL position.

2. Set CONT/LOCK switch (33) to CONT (out) position.

3. Adjust SWEEP RATE control (31) for a slow sweep (approximately midrange).

(c) Clear selected memory bank and prepare to load single sweep; see paragraphs 3-6a(2) and (3).

(d) Request far-end operator to initiate single sweep.

(e) When a complete delay plot is stored, set oscilloscope MODE switch (46) to MEMORY position. Stored delay plot will now be displayed.

(4) Near-End to Far-End Measurements, Two-Wire Circuit with Auxiliary Return Circuit (Far End in Repeat Mode). (See figure 3-26.) This procedure is identical to the equivalent 4-wire circuit test described in paragraph 3-6d(2) except for interface connections. The circuit under test is connected to TRANSMIT jack (36) and the auxiliary circuit is connected to RECEIVE jack (2). At the far-end repeat unit, the transmit output should be connected to the return auxiliary circuit and the 2-wire circuit under test should be connected to the repeat unit's RECEIVE jack (2).

(5) Far-End to Near-End Measurements, Two-Wire Circuit with Auxiliary Forward Circuit (Far End in Repeat Mode). (See figure 3-26.) This test is identical to the equivalent 4-wire circuit test described in paragraph 3-6d(3) except for interface connections. The circuit under test is connected to RECEIVE jack (2) and the auxiliary circuit is connected to TRANSMIT jack (36). At the far-end repeat unit, the 2-wire circuit under test should be connected

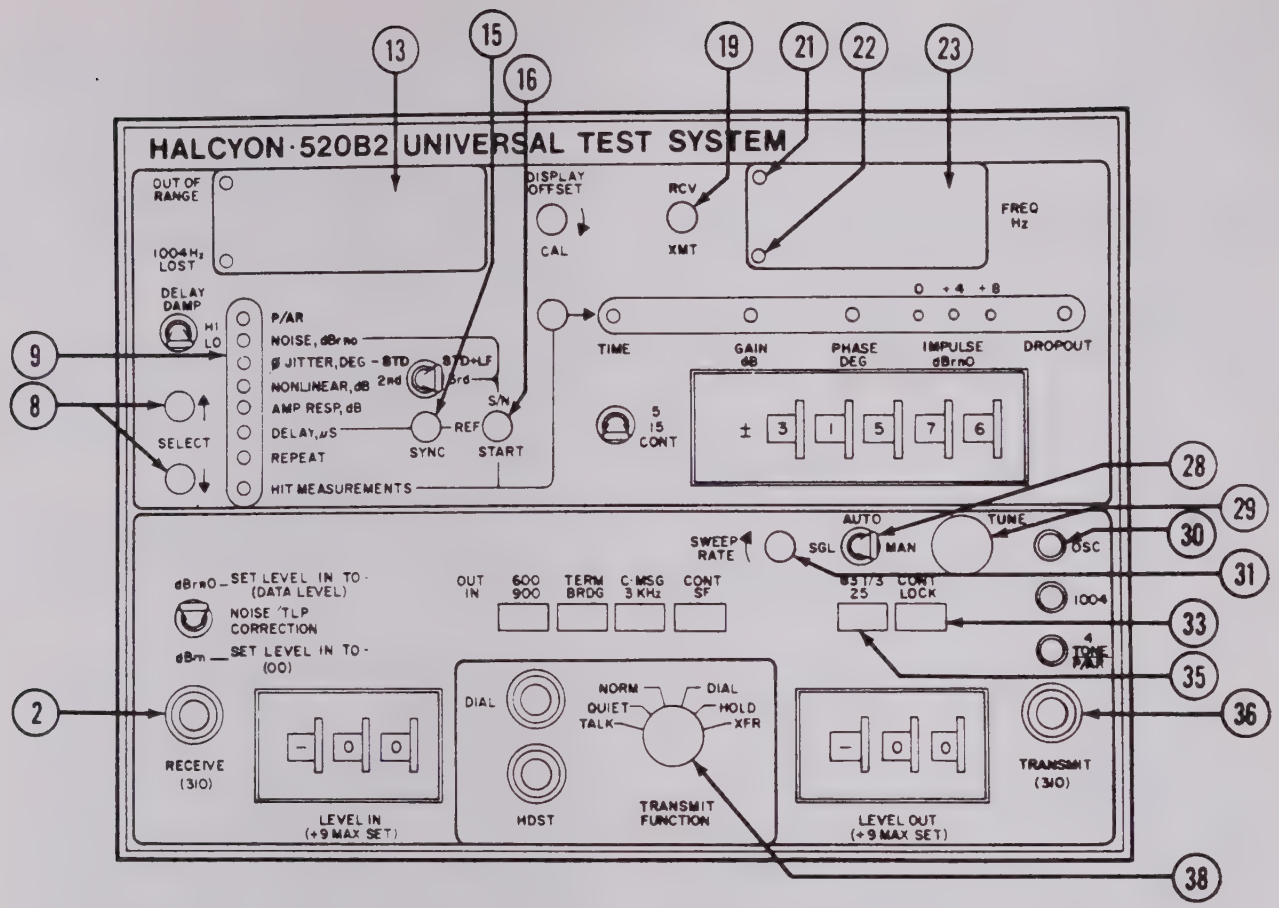

Figure 3-26. Oscilloscope Delay Distortion Measurement Controls

to TRANSMIT jack (36) and the auxiliary circuit should be connected to RECEIVE jack (2). If connections have already been made for the near-end to far-end measurement in accordance with paragraph 3-6d(4), proper interconnections can be accomplished in both the far-end 520B2 repeat unit and the near-end 520B2 master unit by setting TRANSMIT FUNCTION switch (38) on both units to the XFR position.

(6) End-to-End Two-Wire Measurements (Without Return/Forward Reference). (See figure 3-26.) The following paragraphs include details for synchronizing the modulation reference oscillators of both the near-end and the far-end 520B2 test sets when performing end-to-end delay distortion measurements on a 2-wire circuit without a separate reference circuit. If an auxiliary duplex 2-wire circuit is available, the forward/return reference mode should be used as better accuracies may be achieved using a locked reference. Since it is assumed that the only circuit available for this test is the circuit to be measured, it is necessary that the operators coordinate test and setup procedures verbally over the 2-wire circuit before proceeding with the actual tests.

(7) Near-End to Far-End Synchronizing Procedure. (See figure 3-26.) The near-end to far-end test is a transmit-only test and does not require a scope display. Measurement and display are performed by the far-end unit. The following procedure is intended to insure only that the near-end 520B2

modulation reference oscillator is adjusted to its midrange frequency to facilitate measurement by the far-end 520B2. No display setup is involved.

(a) Verify or perform initial setup procedure in accordance with paragraph 3-4.

(b) Loop-back 520B2 by patching from TRANSMIT jack (36) to RECEIVE jack (2).

(c) Use SELECT switches (8) to step mode indicator (9) to DELAY, uS. Verify OSC indicator (30) lights.

(d) Depress RCV/XMT switch (19) so that transmit indicator (22) lights.

(e) Set SGL/AUTO/MAN switch (28) to MAN position.

(f) Set CONT/LOCK switch (33) to LOCK (in) position.

(g) Adjust TUNE control (29) for an indication of 1807±1 Hz on FREQ Hz display (23).

(h) Set 83 1/3 - 25 switch (35) to 25 (in) position.

(i) Press REF switch (16) to zero display (13).

(j) Rotate SYNC control (15) to one extreme of its range (clockwise or counterclockwise direction) to obtain maximum reading on display (13).

(k) Press REF switch (16). Display (13) should reset to zero.

(m) Rotate SYNC control (15) to opposite end of its range to obtain maximum reading on display (13). Note reading. Return SYNC control back to its midrange position for a display reading equal to one-half of maximum value noted above. For example, assume reading obtained is 0036; hence, set SYNC control for a reading of 0018 on display (13). (This sets the oscillator to the center of its frequency range.)

(n) Remove patch cord.

(p) Connect test circuit to TRANSMIT jack (36).

(q) Set SGL/AUTO/MAN switch (28) to AUTO position.

(r) Set CONT/LOCK switch (33) to CONT (out) position.

(s) Adjust SWEEP RATE control (31) for a slow sweep (approximately midrange).

(t) Set 83 1/3 - 25 switch (35) to 83 1/3 (out) position.

(8) Far-End to Near-End Synchronizing and Measurement Display Procedure: (See figure 3-26.)

(a) Instruct far-end operator to adjust 520B2 reference oscillator to center of its range in accordance with paragraph (7) above.

(b) Connect test circuit line to RECEIVE jack (2).

(c) Depress RCV/XMT switch (19) so that receive indicator (21) lights.

(d) Set up oscilloscope in accordance with paragraph 3-6a(1). Set MODE switch (46) to INPUT position.

(e) Press REF switch (16) as the received frequency sweeps through 1800 Hz.

(f) Observe sweep pattern on crt and note direction of drift over several sweeps. Very carefully adjust SYNC control (15) in a clockwise direction to minimize an upward drift, or in a counterclockwise direction to minimize a downward drift.

(g) After each adjustment, press REF switch (16) as the received frequency sweeps through 1800 Hz.

(h) Repeat steps (f) and (g) until drift is minimized and plot repeatedly retraces itself. When the oscillators approach a point of synchronization, adjustment becomes very sensitive and should be done in very small increments while observing trace pattern drift over several sweep intervals.

(i) When drift has been minimized, clear and load scope memory in accordance with instructions in paragraphs 3-6a(2) and (3).

(j) When a complete plot is stored, set oscilloscope MODE switch (46) to MEMORY position. Stored delay plot will now be displayed.

e. Signal Impairment Display (SID). A distinctive Lissajous pattern, derived from the received holding tone (1004 Hz), is displayed when NOISE, Ø JITTER and HIT MEASUREMENT modes are selected. The display is generated by applying the received signal directly to the vertical axis, and a triangular waveform, also derived from the holding tone, to the horizontal axis. Various signal impairments will distort the basic pattern in distinctive ways as shown in figure 3-27(b) through (f).

The extent of such distortion caused by phase jitter, amplitude jitter, and frequency offset may be measured by means of a plastic SID overlay. The SID enables the operator to quickly analyze the pattern for signal impairments on the test circuit. If a particular impairment is suspected, the operator can proceed to that particular measurement to verify whether a signal impairment exists or doesn't exist. For example, the operator is viewing a normal SID pattern, figure 3-27(a). Occasionally, the operator may see what appears to be gain hits, figure 3-27(b). To verify whether gain hits are occurring, the operator can perform the Hit Measurement procedure in accordance with paragraph 3-5h. The operator must first place the SID overlay over the crt and align the SID pattern in accordance with paragraph (1) below.

(1) SID Adjustment Procedure. (See figure 3-28.)

(a) Allow 520B2 to warm up for at least two minutes.

(b) Use SELECT switches (8) to step mode indicator (9) to NOISE, dBrnO mode.

(c) Patch TRANSMIT jack (36) to RECEIVE jack (2).

(d) Align oscilloscope pattern, figure 3-27(a), to the SID crt overlay pattern by adjusting SYNC control (15).

(e) Remove patch and connect circuit under test to TRANSMIT and RECEIVE jacks.

(2) Gain. Gain hits are indicated by momentary changes in the amplitude of the SID pattern; see figure 3-27(b). If gain hits are suspected, refer to paragraph 3-5h for the Hit Measurement procedure.

(3) Noise. Signal noise will be displayed as a general smearing of the basic pattern. However, on most circuits a small amount of noise is always present; see figure 3-27(c). If excessive noise is suspected, refer to paragraph 3-5e for the appropriate Noise Measurement procedure.

(4) Phase Jitter. Phase jitter can be identified by expansion of trace width at both ends of the SID pattern. Phase jitter may result from either incidental phase modulation or from additive noise. If the phase jitter is due to incidental phase modulation, the trace width at the upper and lower center portions of the SID pattern will not be expanded. If due to additive noise components or extraneous tones, the center portions of the trace will also be expanded and show amplitude jitter. Figure 3-27(d) shows a typical

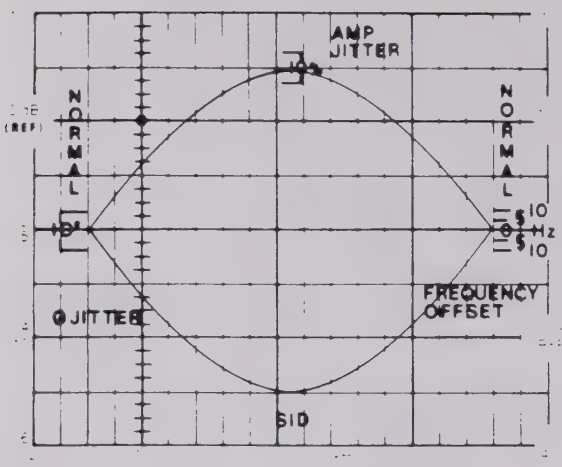

(a) Normal SID Pattern

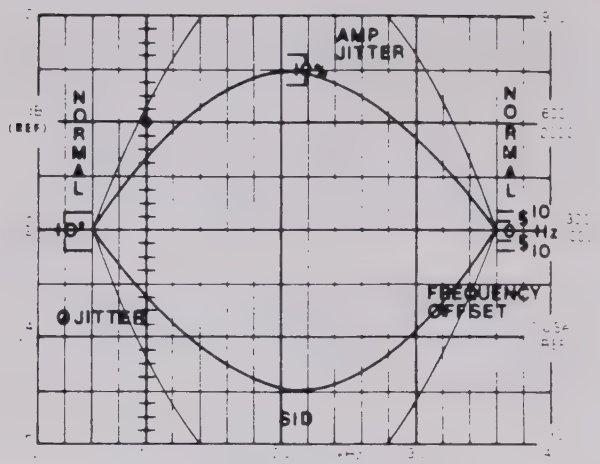

(b) Gain Hits

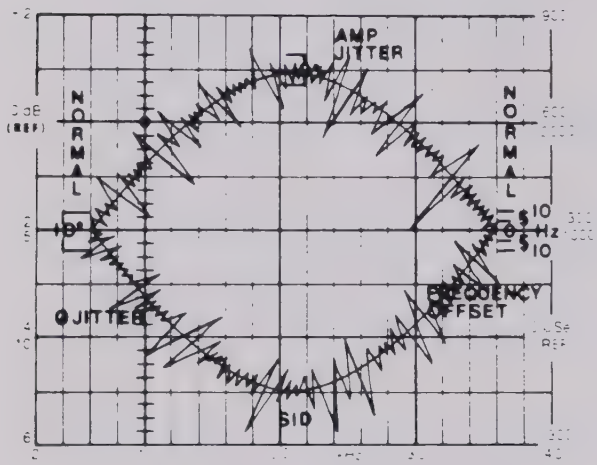

(c) Noise

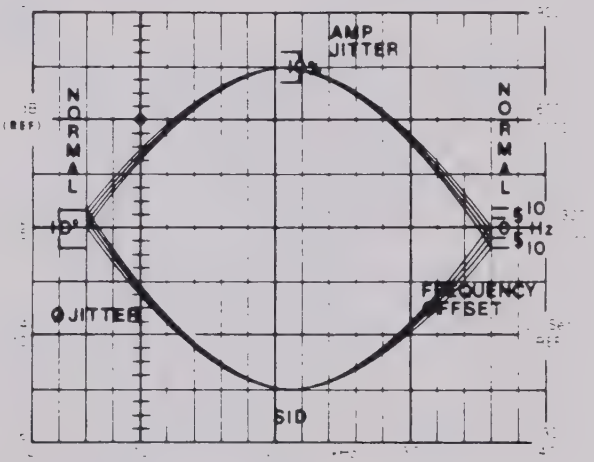

(d) Phase Jitter

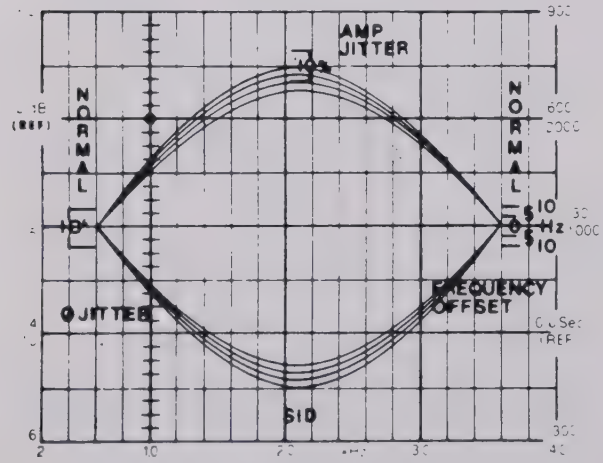

(e) Amplitude Jitter

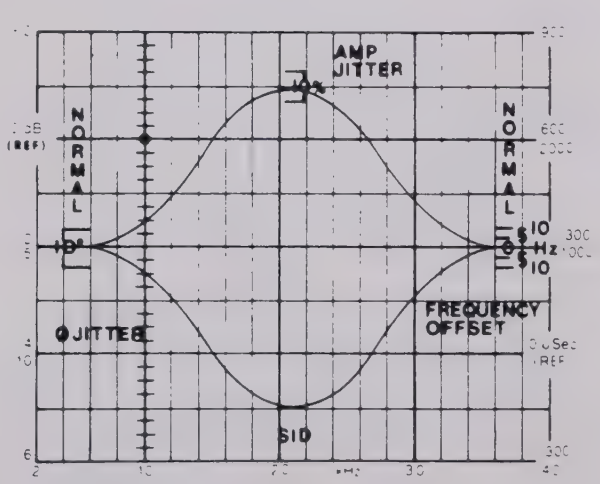

(f) Harmonic Distortion

Figure 3-27. Signal Impairment Display (SID) Waveforms

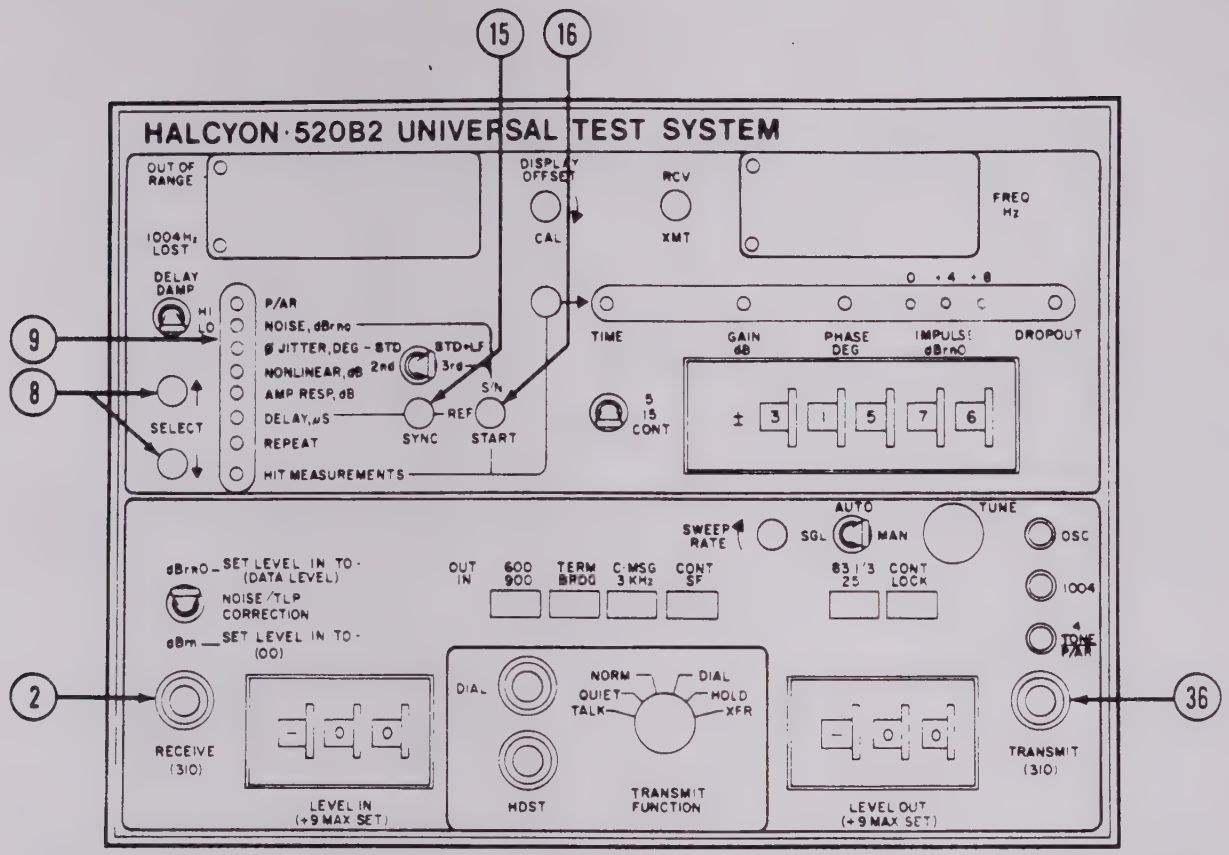

Figure 3-28. Signal Impairment Display (SID) Alignment Controls

SID pattern resulting from 10 degrees of phase jitter. If phase jitter distortion is suspected, refer to paragraph 3-5f for the appropriate Phase Jitter Measurement procedure.

(5) Amplitude Jitter. Amplitude jitter, or incidental amplitude modulation, consists of variations in the amplitude of the received holding tone. The 520B2 test set does not measure this impairment directly. However, the SID will display this parameter as expansions in the trace width of the upper and lower center sections of the SID pattern; the end points (zero crossings) will remain stable. Figure 3-27(e) shows the appearance of the SID pattern resulting from 10-percent amplitude modulation of the received holding tone. As noted under paragraph (4), additive noise and/or interfering tones will expand the trace width of the total SID pattern, showing up as simultaneous phase and amplitude jitter.

(6) Nonlinear Distortion. Nonlinear distortion causes the SID pattern to assume a new distorted shape. This is best illustrated by figure 3-27(f). If nonlinear distortion is suspected, refer to paragraph 3-5g for the appropriate Nonlinear Distortion Measurement procedure.

3-7. X-Y RECORDING PROCEDURES. The 500B Mainframe provides an X-Y drive capability (±2 V full scale) for external recording equipment. The following paragraphs include instructions for connecting and calibrating the external recorder, and for recording attenuation distortion and delay distortion curves.

a. Initial Setup.

(1) 520B2 Setup. (See figure 3-29.)

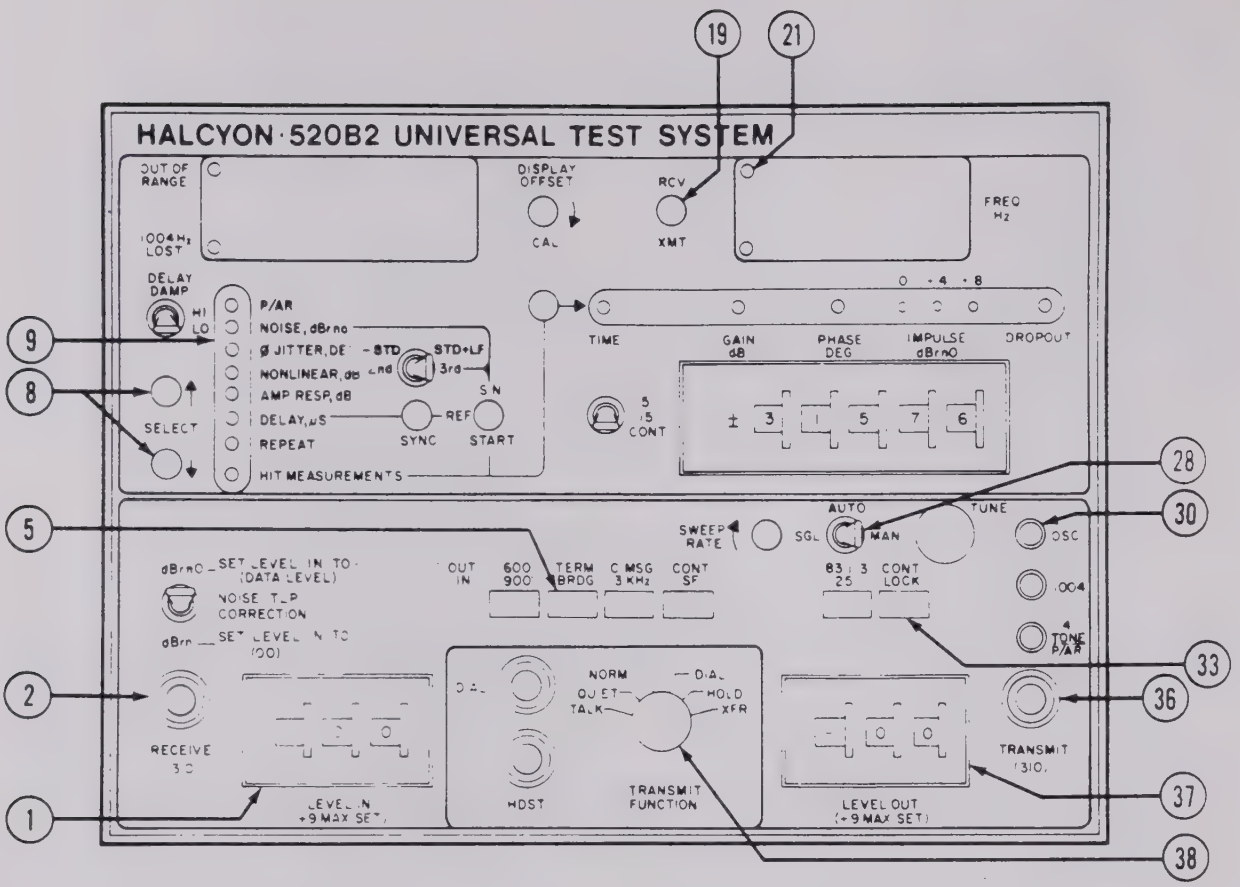

Figure 3-29. X-Y Recording Initial Setup Controls

(a) Patch TRANSMIT jack (36) to RECEIVE jack (2).

(b) Set TERM/BRIDGE switch (5) to TERM (out) position.

(c) Set TRANSMIT FUNCTION switch (38) to NORM position.

(d) Set LEVEL IN attenuator (1) and LEVEL OUT attenuator (37) to -00 dB.

(e) Use SELECT switches (8) to step mode indicator (9) to AMP RESP, dB. Verify OSC indicator (30) lights.

(f) Depress RCV/XMT switch (19) so that receive indicator (21) lights.

(g) Set SGL/AUTO/MAN switch (28) to MAN position.

(h) Set CONT/LOCK switch (33) to CONT (out) position.

(2) X-Y Recorder Setup

(a) Connect X-Y recorder to 520B2. (See figure 3-8 and paragraphs 3-2f(4) and (5) for connector options.)

(b) Install graph paper (pen raised) and power up recorder.

(3) X-Axis Calibration. (See figure 3-30.)

(a) Adjust TUNE control (29) for a reading of 1000±1 Hz on FREQ Hz display (23).

(b) Lower recorder pen and mark graph paper.

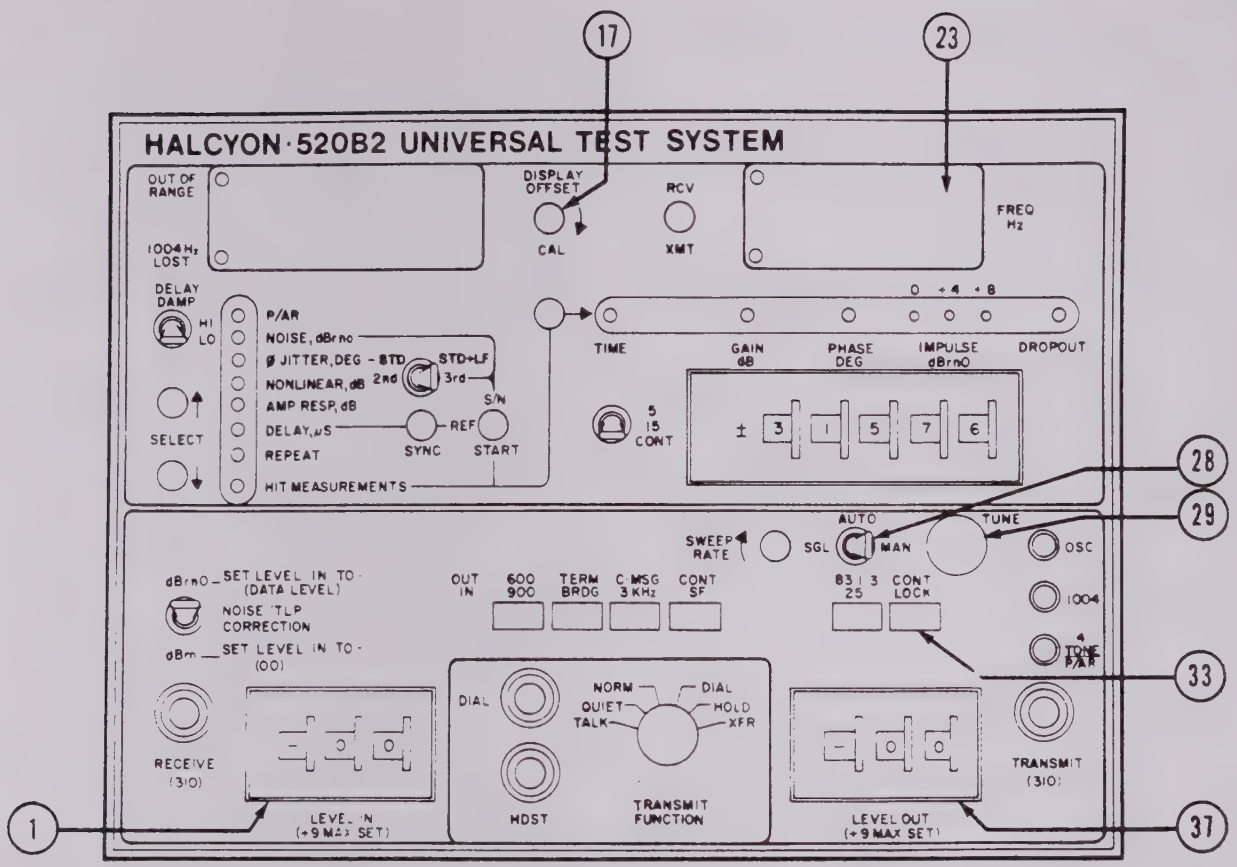

Figure 3-30. X-Y Recording, X-Axis and Y-Axis Calibration, and Attenuation Distortion Controls

(c) Raise pen and observe offset between pen mark and 1000-Hz reference line on graph paper.

NOTE

The 1000-Hz reference line should be chosen to allow responses to be plotted down to 230 Hz.

(d) Adjust recorder X-axis offset control to align pen with 1000-Hz reference line.

(e) With recorder pen raised, adjust TUNE control (29) for a reading of 3000±1 Hz on FREQ Hz display (23).

(f) Mark paper and observe offset from 3000-Hz reference line as described above.

NOTE

The 3000-Hz reference line should be chosen to allow responses to be plotted as high as 3450 Hz.

(g) Adjust X-axis gain control to align pen with 3000-Hz reference line.

(h) Repeat steps (a) through (g) until accurate reference points are established.

(i) Another technique for minimizing adjustment interaction is to use the gain control to establish a 2-kHz bandwidth, close to the reference points; then use the offset control to align the 2-kHz band with the reference points.

(4) Y-Axis Calibration. (See figure 3-30.)

(a) Verify that LEVEL IN attenuator (1) and LEVEL OUT attenuator (37) are set at -00 dB.

(b) Verify that DISPLAY OFFSET control (17) is at full-clockwise CAL position.

(c) Lower recorder pen to mark graph paper as described previously, then adjust Y-axis offset control to align pen with reference 0 dB point on graph paper.

(d) Raise recorder pen and adjust OUTPUT LEVEL attenuator (37) to -10 dB.

(e) Adjust Y-axis gain control to align pen with -10 dB reference line.

(f) Repeat steps (a) through (e) until accurate reference points are established at 0 and -10 dB. A technique similar to that described in paragraph 3-7a(3), step (i) can be used to minimize adjustment interaction. In this case the Y-axis gain control is used to establish a 10-dB difference, and the offset control is used to align the 10-dB limits with the reference points.

NOTE

Always keeps the recorder pen in the raised position when not in use. Otherwise, initial set-up and flyback traces will mar the data record.

b. Attenuation Distortion Measurement.

(1) Near-End to Far-End Measurement. (See figure 3-30.) The procedure for this transmit-only measurement is as follows:

(a) Perform procedures in paragraph 3-5b(1), steps (a) through (g).

(b) Set SGL/AUTO/MAN switch (28) to SGL position.

(c) Set CONT/LOCK switch (33) to CONT (out) position.

(d) Notify far-end operator to prepare for single sweep.

(e) When far-end operator is ready, initiate single sweep by setting SGL/AUTO/MAN switch momentarily to AUTO, then back to SGL position.

(2) Far-End to Near-End Measurement. (See figure 3-30.) The procedure for this receive-only measurement is as follows:

(a) Calibrate X-Y recorder in accordance with paragraph 3-7a.

(b) Perform procedures in paragraph 3-5b(3), steps (a) through (f).

(c) Lower X-Y recorder pen.

(d) Instruct far-end operator to initiate single sweep.

(e) When a complete response plot is recorded, raise recorder pen.

(f) Return DISPLAY OFFSET control (17) to CAL position.

(g) Verify that LEVEL IN attenuator (1) is set to expected receive data level position.

(3) Near-End to Far-End Measurement (Far End in Repeat Mode). (See figure 3-31.) The procedure for this repeat measurement is as follows:

(a) Verify that X-Y recorder is calibrated in accordance with paragraph 3-7a.

(b) Perform procedures in paragraph 3-5b(2), steps (a) through (k).

(c) Set SGL/AUTO/MAN switch (28) to SGL position.

(d) Set CONT/LOCK switch (33) to CONT (out) position.

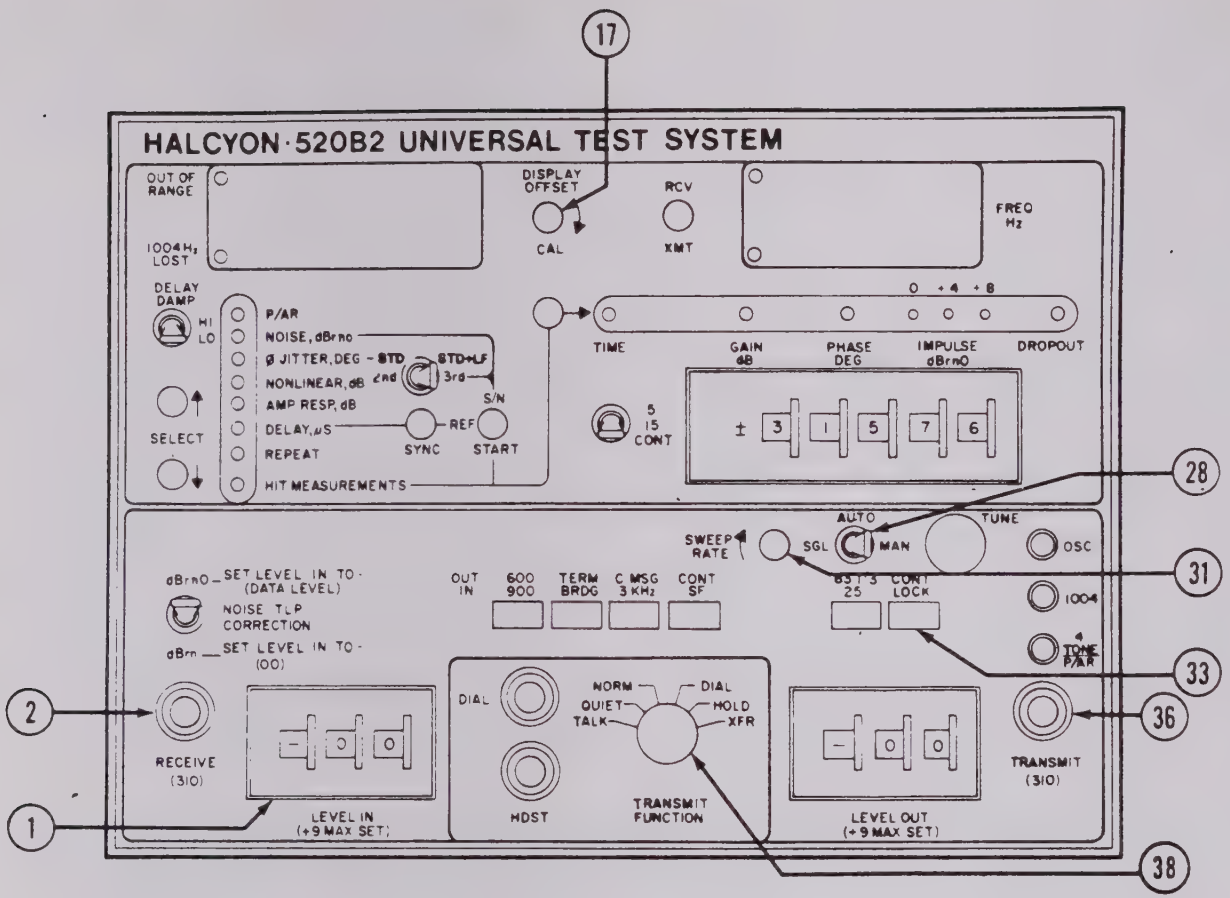

Figure 3-31. X-Y Recording, Attenuation Distortion, and Delay Distortion Controls

(e) Adjust SWEEP RATE control (31) for a slow sweep (approximately midrange).

(f) Lower X-Y recorder pen.

(g) Initiate single sweep by setting SGL/AUTO/MAN switch (28) momentarily to AUTO, then back to SGL.

(h) When a complete response plot is recorded, raise recorder pen.

(i) Return DISPLAY OFFSET control (17) to CAL position.

(j) Verify LEVEL IN attenuator (1) is set at expected receive data level position.

c. Delay Distortion Measurement. (See figure 3-31.)

(1) Loop Measurement. The procedure for loop measurement is as follows:

(a) Verify that X-Y recorder is calibrated in accordance with paragraph 3-7a.

(b) Perform procedures in paragraph 3-5c(1), steps (a) through (h).

(c) Set SGL/AUTO/MAN switch (28) to SGL position.

(d) Verify CONT/LOCK switch (33) is set at CONT (out) position.

(e) Adjust SWEEP RATE control (31) for a slow sweep (approximately midrange).

(f) Lower X-Y recorder pen.

(g) Initiate single sweep by setting SGL/AUTO/MAN switch (28) momentarily to AUTO, then back to SGL.

(h) When a complete response plot is recorded, raise recorder pen.

(2) Near-End to Far-End Measurement, 4-Wire Circuit (Far End in Repeat Mode). The procedure for testing "forward" line from the near-end unit is identical to the requirements for loop tests in paragraph (1) above. The far-end unit (in Repeat mode) must have its output level properly adjusted to -13 dBm0 and typically have its oscillator set to a frequency of 1204 ±1 Hz. Before the actual delay tests are started, the far-end operator should verify that the received test signal level is within allowable range.

(3) Far-End to Near-End Measurement, 4-Wire Circuit (Far End in Repeat Mode). The procedure for this "return" line measurement is as follows:

(a) Verify that X-Y recorder is calibrated in accordance with paragraph 3-7a.

(b) Perform procedures in paragraph 3-5c(3), steps (a) through (p).

(c) Notify far-end (repeat unit) operator to set up far-end 520B2 unit as follows:

1. Set SGL/AUTO/MAN switch (28) to SGL position.

2. Set CONT/LOCK switch (33) to CONT.

3. Adjust SWEEP RATE control (31) for a slow sweep (approximately midrange).

(d) Lower X-Y recorder pen.

(e) Request far-end operator to initiate a single sweep.

(f) When a complete delay distortion plot is recorded, raise recorder pen.

(4) Near-End to Far-End Measurements, 2-Wire Circuit with Auxiliary Return Circuit (Far End in Repeat Mode). This procedure is identical to the equivalent 4-wire circuit test described in paragraph 3-7c(2) except for interface connections. The circuit under test is connected to TRANSMIT jack (36) and the auxiliary circuit is connected to RECEIVE jack (2). At the far-end repeat unit, the transmit output should be connected to the return auxiliary circuit and the 2-wire circuit under test should be connected to the repeat unit's RECEIVE jack (2).

(5) Far-End to Near-End Measurements, 2-Wire Circuit with Auxiliary Forward Circuit (Far End in Repeat Mode). This test is identical to the equivalent 4-wire circuit test described in paragraph 3-7c(3) except for interface connections. The circuit under test is connected to RECEIVE jack (2) and the auxiliary circuit is connected to TRANSMIT jack (36). At the far-end repeat unit, the 2-wire circuit under test should be connected to TRANSMIT jack (36) and the auxiliary circuit should be connected to RECEIVE jack (2). If connections have already been made for the near-end to far-end measurement in accordance with paragraph 3-7c(4), proper interconnections can be accomplished in both the far-end 520B2 repeat unit and the near-end 520B2 master unit by setting TRANSMIT FUNCTION switch (38) on both units to the XFR position.

3-8. SELF-CHECK PROCEDURES. The self-check procedures are intended to quickly determine the basic operating condition of all measurement parameters of the equipment. They are not intended as a comprehensive calibration check of all

parameters, but only to confirm the basic measurement integrity of the equipment. If the self-check procedure for any of the parameter tests cannot be properly performed, refer to Chapter 5.

NOTE

The following procedures should be performed sequentially, in the order given.

a. Level/Frequency. (See figure 3-32.)

(1) Set TRANSMIT FUNCTION switch (38) to NORM.

(2) Set TERM/BRIDGE switch (5) to TERM (out) position.

(3) Patch TRANSMIT jack (36) to RECEIVE jack (2).

(4) Use SELECT switches (8) to step mode indicator (9) to AMP RESP, dB. Verify OSC indicator (30) lights.

(5) Set SGL/AUTO/MAN switch (28) to MAN position.

(6) Adjust TUNE control (29) for a reading of 1004±1 Hz on FREQ Hz display (23).

(7) Depress RCV/XMT switch (19) so that transmit indicator (22) lights, and note reading on display (23). Then depress RCV/XMT switch so that receive indicator (21) lights. Display should read the same for both settings.

(8) Set LEVEL IN attenuator (1) and LEVEL OUT attenuator (37) to 00.

(9) After a 5-minute warm-up period, display (13) should indicate 0.0±0.1 dB.

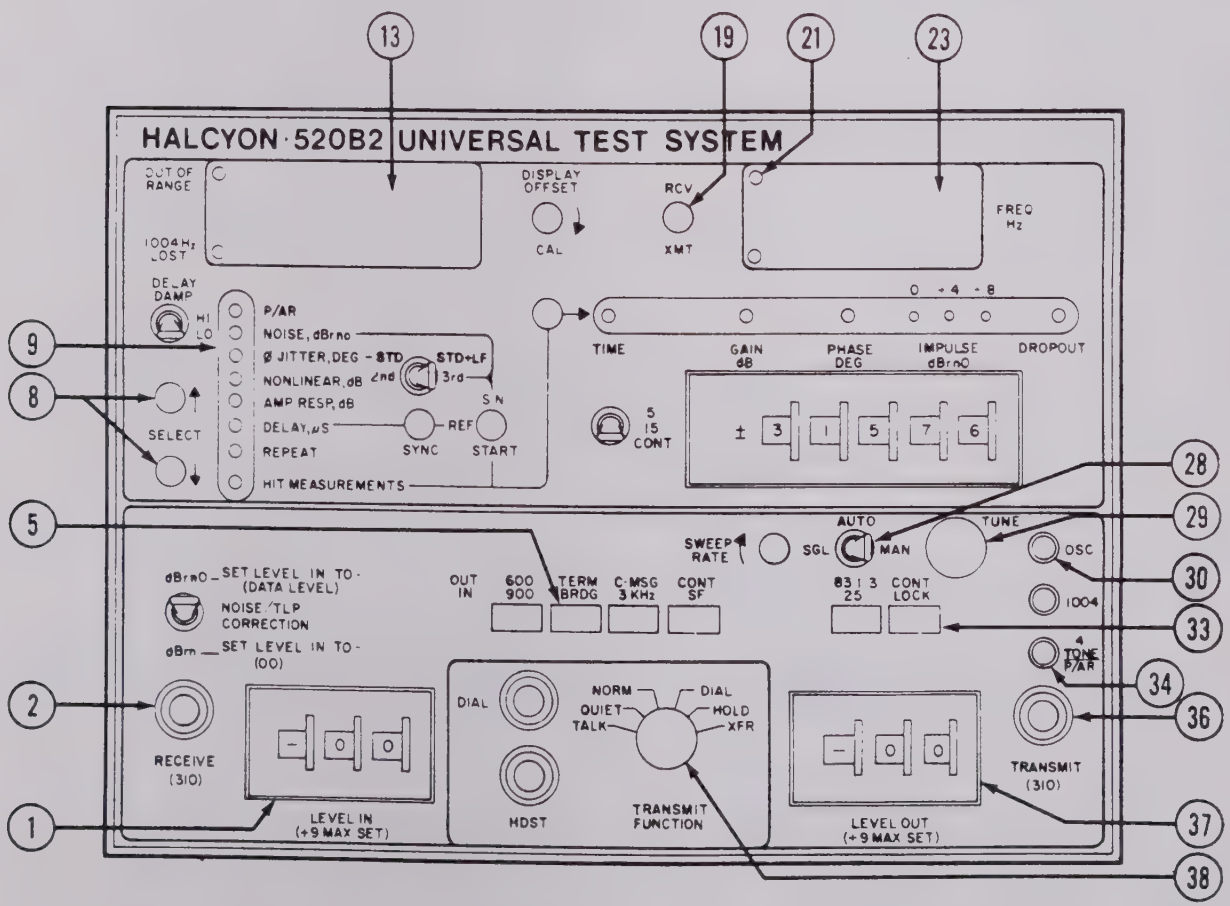

Figure 3-32. Level, Frequency, and P/AR Self-Check Controls

(10) Sequentially set LEVEL OUT attenuator (37) to -10 dB and -20 dB. Display (13) should indicate -10.0±0.1 and -20.0±0.1 dB, respectively.

b. Oscilloscope Display. (See figures 3-32 and 3-33.)

(1) Set oscilloscope MODE switch (46) to INPUT position.

(2) Adjust ILLUM (43), FOCUS (44) and INTENSITY (45) as required to view dot on CRT.

(3) Set LEVEL OUT attenuator (37) to 00. Observe that dot on CRT moves to 0±0.2 line on graticule.

(4) Set LEVEL OUT attenuator (37) to -10 dB. Observe that dot on crt moves to -10±0.2 dB line on graticule.

(5) Verify CONT/LOCK switch (33) is at CONT (out) position.

(6) Sequentially adjust TUNE control (29) to 1000 Hz, 2000 Hz and 3000 Hz. Observe that dot on crt moves to within 5 percent (±1.5 minor divisions) of respective frequency scale calibration points on graticule.

c. P/AR. (See figure 3-32.) Applicable to Model 520B2-17 only.

(1) Use SELECT switches (8) to step mode indicator (9) to P/AR mode. Verify 4 TONE P/AR indicator (34) lights.

(2) Set LEVEL IN attenuator (1) and LEVEL OUT attenuator (37) to 00. Verify display (13) indicates 100±1.

d. Noise. (See figure 3-34.)

(1) Use SELECT switches (8) to step mode indicator (9) to NOISE, dBrn0 mode.

(2) Set NOISE/TLP CORRECTION switch (3) to dBrn (down) position.

(3) Set TRANSMIT FUNCTION switch (38) to QUIET position.

(4) Set C-MSG/3 KHz switch (6) to C-MSG (out) position.

(5) Verify LEVEL IN attenuator (1) and LEVEL OUT attenuator (37) are at 00. Display (13) should indicate 10 dBrn or less.

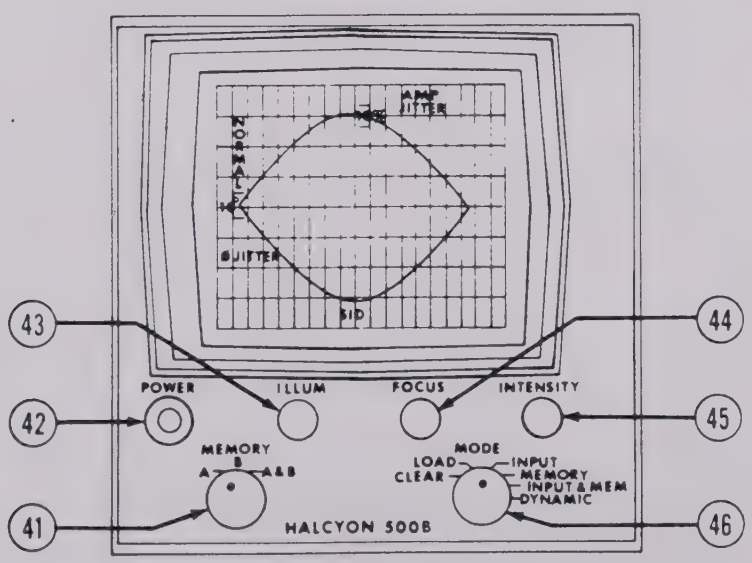

Figure 3-33. Oscilloscope Display Self-Check Controls

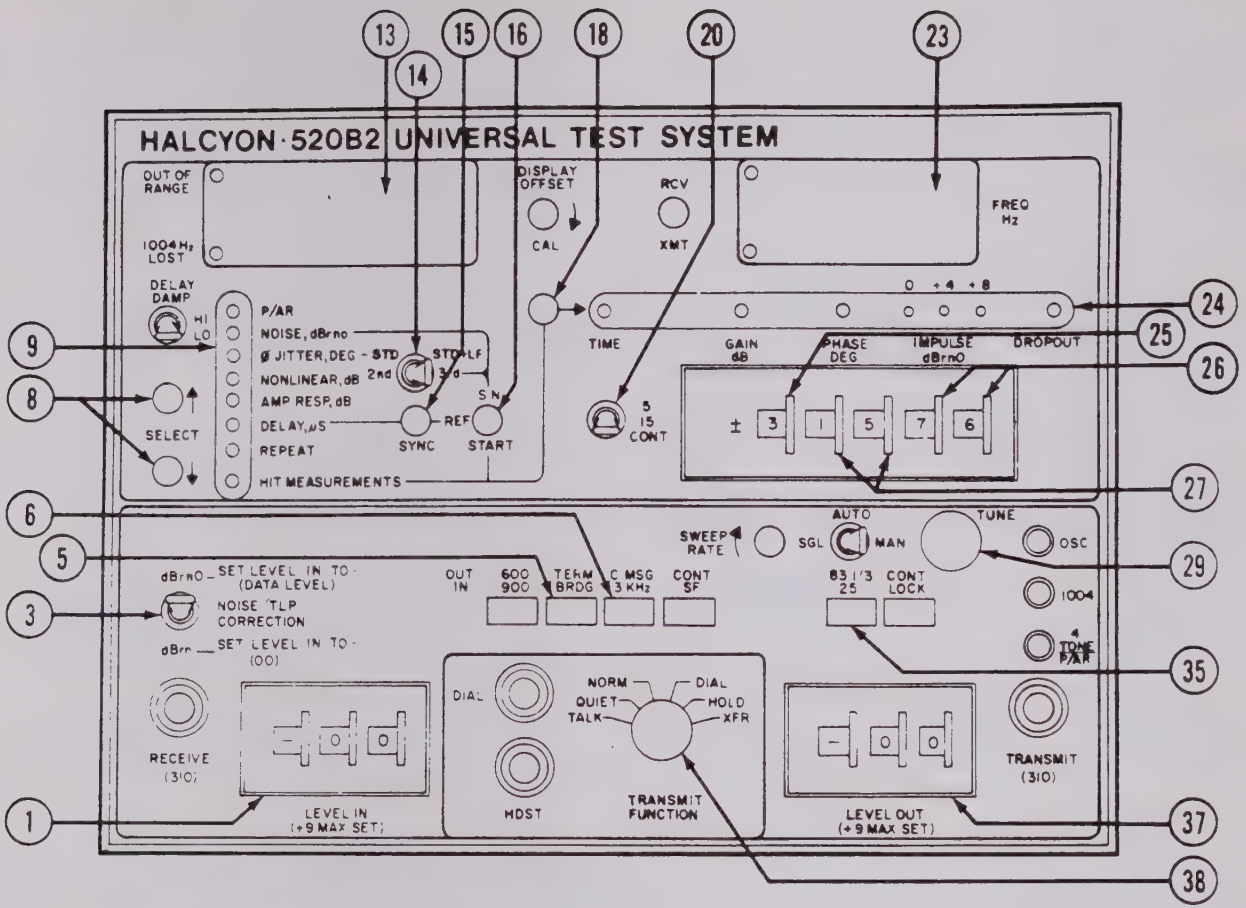

Figure 3-34. Noise, Phase Jitter, Nonlinear Distortion, Envelope Delay, and Hit Measurement Self-Check Controls

(6) Reset TRANSMIT FUNCTION switch (38) to NORM position. Display (13) should indicate 39 dBrn or less.

(7) Press and hold S/N switch (16). Display (13) should indicate 90 dBrn. Release S/N switch.

(8) Check oscilloscope display for undistorted SID patterns as shown in figure 3-27(a). (Adjust SYNC control (15) as necessary to correct pattern symmetry.)

(9) Set NOISE/TLP CORRECTION switch (3) to dBrnO (up) position.

(10) Press and hold S/N switch (16). Display (13) should indicate 77 ±1 dB. Release S/N switch.

e. Phase Jitter. (See figure 3-34.)

(1) Use SELECT switches (8) to step mode indicator (9) to Ø JITTER, DEG. mode.

(2) Display (13) should indicate 0.0 degrees with switch (14) in STD and no more than 0.1 degree with switch (14) in STD+LF position.

f. Nonlinear Distortion. (See figure 3-34.)

(1) Use SELECT switches (8) to step mode indicator (9) to NONLINEAR, dB mode.

(2) Set 2nd/3rd order switch (14) to 2nd position. Display (13) should indicate -70 dB or lower.

(3) Set 2nd/3rd order switch (14) to 3rd position. Display (13) should indicate -75 dB or lower.

(4) Observe distinctive four-tone pattern on crt as shown in figure 3-35.

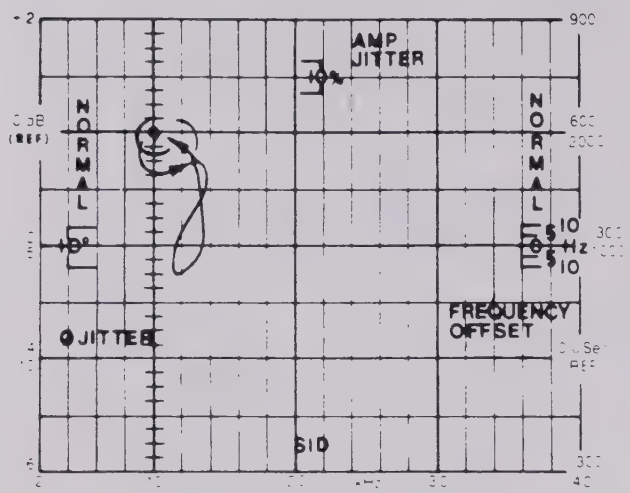

Figure 3-35. Four-Tone Pattern

g. Envelope Delay. (See figure 3-34.)

(1) Use SELECT switches (8) to step mode indicator (9) to DELAY, uS.

(2) Set 83 1/3 - 25 switch (35) to 83 1/3 (out) position.

(3) Adjust TUNE control (29) for a reading of 1800±1 Hz on FREQ Hz display (23).

(4) Press S/N switch (16) momentarily.

(5) Display (13) should reset and indicate 0000±1 usec. Dot on crt should correspond to 0 usec ±5 percent (±1.5 minor divisions) on graticule.

h. Hit Measurement. (See figure 3-34.)

(1) Set 5/15/CONT switch (20) to CONT position.

(2) Use SELECT switches (8) to step mode indicator (9) to HIT MEASUREMENTS mode.

(3) Verify C-MSG/3KHZ switch (6) is at C-MSG (out) position.

(4) Use switch (18) to advance hit measurements indicator (24) to GAIN dB mode, and set threshold switch (25) to ±6 dB.

(5) Toggle TERM/BRDG switch (5) between TERM and BRDG positions. Display (13) should increment one count for each transition. Return switch to TERM (out) position.

(6) Use switch (18) to advance hit measurements indicator (24) to PHASE DEG mode.

(7) Verify threshold switch (27) is at 05 degrees.

(8) Toggle LEVEL OUT attenuator (37) plus and minus 1 dB. Display (13) should increment 1 count for each transition.

(9) Use SELECT switches (8) to step mode indicator (9) to NOISE, dBrn0.

(10) Verify LEVEL IN attenuator (1) and LEVEL OUT attenuator (37) are at 00.

(11) Set NOISE/TLP CORRECTION switch (3) to dBrn (down) position. Record reading on display (13), which represents composite dBrn0 level of 2nd- and 3rd-harmonic content of 1004-Hz holding tone oscillator.

(12) Use SELECT switches (8) to step mode indicator (9) to HIT MEASUREMENTS.

(13) Use switch (18) to advance hit measurements indicator (24) to IMPULSE 0 count register.

(14) Set threshold switches (26) to dBrn0 value 5 dB above reading recorded in step (11).

(15) Display (13) should show incrementing count. Increasing threshold setting of threshold switch (26) by one dB should halt further accumulation of counts.

(16) Use switch (18) to advance hit measurements indicator (24) to DROPOUT mode.

(17) Toggle TRANSMIT FUNCTION switch (38) sequentially between NORM and QUIET positions. Display (13) should increment one count for each transition from NORM to QUIET.

(18) Return TRANSMIT FUNCTION switch to NORM position and disconnect patch from TRANSMIT and RECEIVE jacks. This completes the self-check procedure.

CHAPTER 4

PRINCIPLES OF OPERATION

4-1. INTRODUCTION. This chapter covers the principles of operation of the Model 520B2-07/17 Universal Test System.

4-2. MODEL 520B2 PLUG-IN.

a. Transmitter Functional Description. (See figures 4-1, FO-1, and FO-2.) The transmit portion of the 520B2 is comprised of the following basic circuit elements:

Voltage controlled oscillator (VCO)

100/100.4-Hz reference frequency

4-tone oscillators

P/AR generator (Model 520B2-17 only)

25 and 83-1/3 Hz modulation frequencies

Modulator

Transmit mode select switch/logic

Output attenuators

Output amplifier

Impedance matching

Dial/Hold/Xfr.

Descriptions of the circuit elements are presented in the following paragraphs.

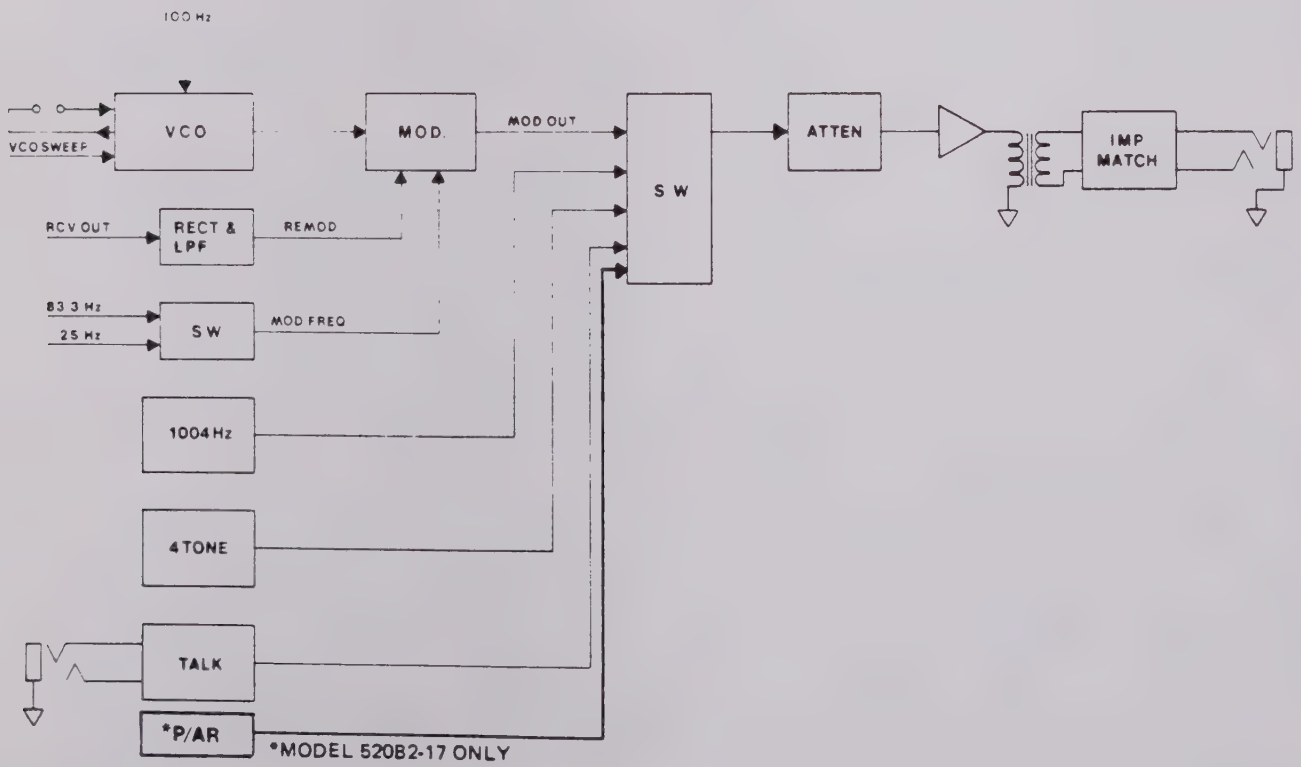

Figure 4-1. Transmitter Circuits, Simplified Block Diagram

(1) VCO. The VCO circuit provides a sine-wave output. The tuning methods available to the operator are Manual, Continuous Sweep with adjustable sweep rate, and Single Sweep with adjustable sweep rate. Frequency limits and tolerances are detailed in table 1-1.

(2) 100/100.4-Hz Reference. This circuit is a 1004-Hz (or 1000-Hz) oscillator which is divided down to provide a 100- or 100.4-Hz reference frequency. The selection of a 100 Hz or 100.4 Hz reference frequency is determined by a switch located on the motherboard. The factory setting is 100.4 Hz. The VCO can be phase locked to the Reference Oscillator by selecting LOCK on the front panel of the instrument.

(3) 4-Tone Generator. This generator circuit is made up of four oscillator circuits. One pair of oscillators is centered at 860 Hz and a second pair is centered at 1380 Hz. These four tones are summed at equal levels of output and are used for nonlinear distortion measurements.

(4) 25 and 83-1/3 Hz Modulation Frequencies. Modulation frequencies are obtained from a 1-MHz oscillator located on the Data Accumulator board. The 1 MHz frequency is divided down to obtain 25 and 83-1/3 Hz modulation and 25 and 83-1/3 Hz reference frequencies.

(5) Modulator. The modulator is comprised of 25 and 83-1/3 Hz bandpass filters, control logic and a solid state switch to select the modulation desired or an unmodulated condition. The selected signal, along with the signal from the VCO is applied first to a multiplier stage and then to a unity gain amplifier. The modulator output is then connected to the transmit select switch on the A/D Converter board.

(6) Transmit Mode Select Switch. All transmit related signals are routed to the solid state transmit select switch. Transmit select logic circuits then determine which signals are appropriate for the panel selected operating mode and controls the transmit select switch. The selected signals are then connected to the output attneuator which is located on the Preamp and Mode Select board.

(7) Output Attenuators. The output attenuators are located on the Preamp and Mode Select board and consist of a 30-dB attenuator and a 1-dB attenuator/polarity control, each followed by a buffer stage. The output of the attenuators is used to drive the output amplifier.

(8) Output Amplifier. The output amplifier on the Repeat and Transmit Function board is a single unity-gain stage. The amplifier output is connected to the primary of the line coupling transformer, T2, located on the Preamp and Mode Select board. T2 provides the basic instrument-to-line interface to the transmit line. The transformer secondary is matched to the operating line conditions by circuits on the Termination board.

(9) Impedance Matching Circuits. The secondary of the line coupling transformer is matched to the line by a panel-selected choice of resistive impedance matching elements. The output side of the matching circuits is connected to the transmit jacks on the front panel and the banana jacks on the rear panel, and the interconnecting DIAL/HOLD/XFR circuits.

(10) Dial/Hold/Xfr. When the 520B2 is used on a two-wire dial-up line, the dial/hold/xfr circuitry is used. In the DIAL position, the DIAL jack (310 wired T/R/S) is connected to the transmit line. The transition from DIAL to HOLD is made via a make-before-break contact and the DIAL jack is disconnected in this position. In the HOLD position, a 200-ohm holding coil is connected across the circuit. In the XFR position, the transmitter and receiver

inputs are interchanged behind the front-panel jacks.

b. Receiver Functional Description. (See figures 4-2, FO-1, and FO-2.) The receiver is designed to measure the following:

Transmitted frequency in Hz

Transmitted output level in dBm

Received frequency in Hz

Received level in dBm

P/AR in P/AR units (Model 520B2-17 only)

Noise in dBrn0 and dBrn

Phase jitter, peak-to-peak

Nonlinear distortion in dB

Amplifier response in dB

Hit measurements (including signal dropouts, gain hits, phase hits, and impulse noise hits) relative to a selected threshold level (REF dB), threshold +4 dB and threshold +8 dB.

(1) Repeat Capability. The instrument circuitry incorporates a repeat mode for use when another measuring instrument performs envelope delay or amplitude measurements from the other end of the transmission lines. In the Repeat mode, the modulation is stripped from the incoming signal and used to modulate a fixed carrier (usually 1800 Hz) for retransmission.

(2) Receive Input. The input circuit is accessed via rear-panel-mounted banana jacks and/or front-panel-mounted (310) jack. The input conforms to standard tip and ring wiring.

(3) Input Matching and Coupling Selection. The initial element of the input circuitry selects a 600-ohm line

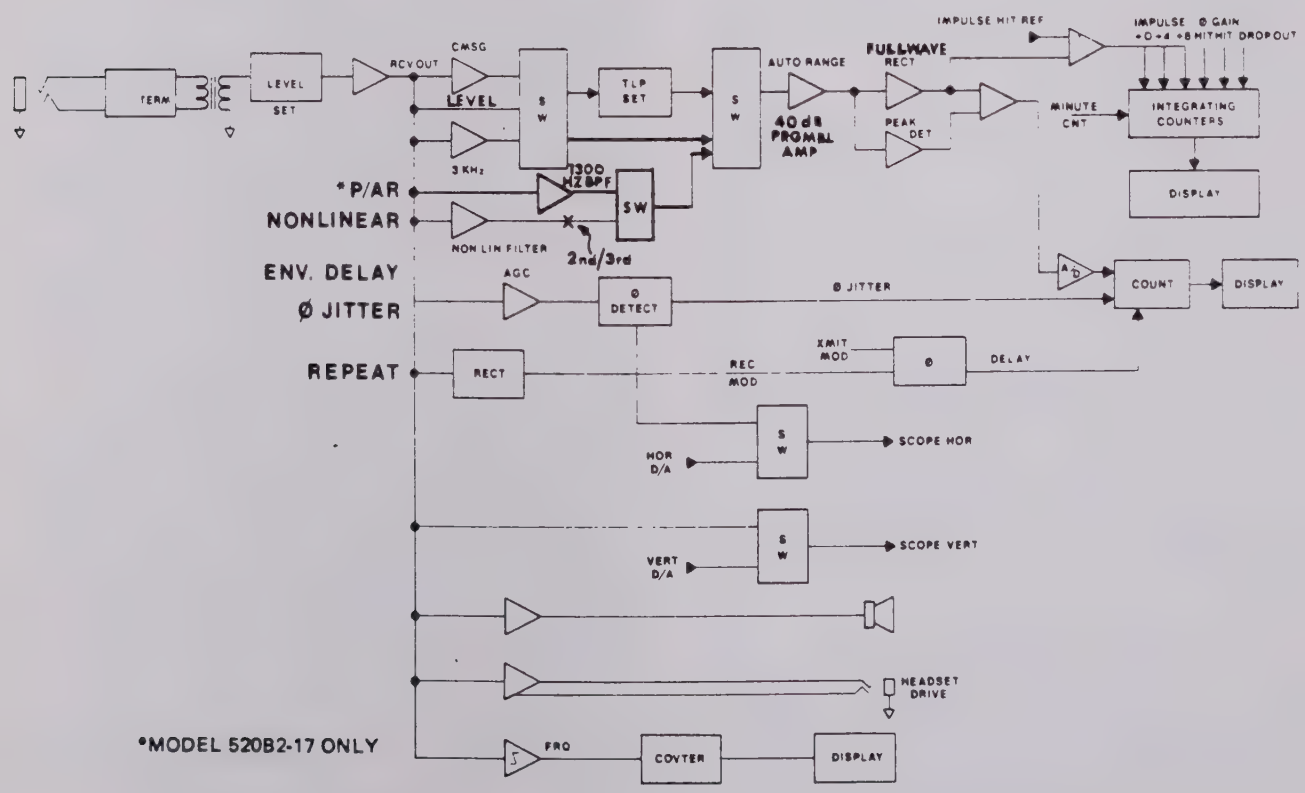

Figure 4-2. Receiver Circuits, Simplified Block Diagram

termination, a 900-ohm line termination, or the line bridged by the balanced transformer primary, by means of front panel controls.

(4) Preamp/Attenuator. The secondary of the balanced transformer is connected to the input of 600/900-ohm gain conversion amplifier. This conversion amplifier provides a compensated level of gain to correspond with the 600-ohm or 900-ohm impedance selected from the front panel.

The incoming signal is attenuated up to 30 dB in 10-dB thumbwheel selected steps. Attenuation of the signal at this point in the circuit insures that the signal will not exceed the dynamic output range of the 30-dB gain amplifier that follows the attenuator.

Final output level of the preamp/attenuator circuits is determined by a combination gain/loss stage. This combination stage is an amplifier whose level of gain or loss is determined by the setting of an attenuator with a range of -9 to +9 dB in 1-dB thumbwheel-selected steps. Positive or negative gain is also thumbwheel selected.

The output of the preamp/attenuator circuitry is connected to the input of the 10-kHz band-limiting low-pass Filter.

(5) 10-kHz Low-Pass Filter. Output of the preamp/attenuator stages is processed through a 10-kHz band-limit LPF. The output of this filter is applied to the signal weighting filters, the 1300-Hz P/AR band pass filter (in Model 520B2-17), and the nonlinear filters.

(6) Signal Weighting Select. The output of the 10-kHz low-pass band-limit filter is followed by straight-through, unweighted, C-message weighted and 3-kHz flat weighted circuits which are individually selected by the receiver control logic and weighting select switch in accordance with the operating modes set on the front panel. The selected output is applied to both the TLP set input and the RCV logic switch.

(7) TLP Set. The signal weighting filter output selected by the control logic and the TLP switch is processed through the TLP correction circuits which consist of attenuators and amplifiers that are factory set to provide a 0 dB signal level without TLP correction and -13 dB signal level when TLP corrections are selected on the front panel. The output of this circuit is connected to the RCV logic switch.

(8) 1300-Hz P/AR Band Pass Filter. (Model 520B2-17 only.) The input to this band-pass filter is supplied by the output of the 10-kHz band-limit BPF described in paragraph (5). The 1300-Hz BPF is comprised of two second order band-pass filters in cascade, each with a 1300-Hz center frequency. This two-section filter weights the center of the voice band more heavily than the band edges, and the filter output forms the P/AR test signal. The output is connected to a P/AR — nonlinear select switch which is controlled by the receiver control logic in accordance with front-panel control settings.

(9) Nonlinear Distortion Filter. The nonlinear filter receives signal input from the output of the 10-kHz LPF. The nonlinear filter is actually comprised of three BPF elements, one at 520 Hz, one at 2240 Hz, and one at 1900 Hz. The 520-Hz and 2240-Hz BPF elements are summed and referred to as the 2nd-order intermodulation product filter. This filter output passes the second order Intermodulation products of the test signal.

The 1900-Hz BPF is used individually and referred to in this text as the 3rd-order intermodulation product filter. Third-order products of the test signal are passed by this filter. The

2nd-order filter output and 3rd-order filter output are each connected to the nonlinear, 2nd/3rd select switch.

(10) Nonlinear, 2nd/3rd Select. This is a solid state switch. Signals from the 2nd-order filter or the 3rd-order filter are selected by front-panel control and the switch connects the desired signal to the P/AR — nonlinear select switch.

(11) S/N (Signal-to-Noise) Switch. When this switch is depressed, the two tones centered at 1380 Hz are disabled; the level of the other two tones (centered at 860 Hz) are increased by 3±0.25 dB.

(12) P/AR — Nonlinear Select. This signal selection connects the output of either the 1300-Hz P/AR BPF or the nonlinear filters to the RCV logic switch. The choice of signal connected is determined by the setting of controls on the front panel.

(13) Receive Logic Select Switch. The signals connected to the select switch are the 1004-Hz notch filter, the output of the TLP set, the output of signal weighting select, and the output of the P/AR nonlinear select. The receive logic, as determined by the settings of front-panel controls, enables the select switch to connect the appropriate signal to both the input of the headset PA and the autorange circuit.

(14) Autorange Amplifier. The receive logic select switch output provides the autorange input. This autorange stage consists of a 40-dB programmable amplifier, a gain-control switch, and a gain-control logic circuit. The gain is programmed in two 20-dB steps and the range sense information driving the gain-control logic is provided by the output of the underrange and overrange comparators. The autorange amplifier output is connected to the input detector.

(15) Level/Noise Detectors. The output of the autorange amplifier connects to both an average detector and peak detector in the noise detector circuit. The output of the average detector constitutes the detected level measured. The level signal is applied to the reference threshold control circuits and the autorange select switch. The output of the peak detector is combined with the output of the average detector to form a quasi-rms detector. The quasi-rms output is connected to the autorange select switch.

(16) Autorange Select Switch. This switch selects either the average detector level output or the quasi-rms noise output and applies it to the 1-Hz LPF comparator signal filter.

(17) 1-Hz LPF Comparator Filter. This filter is used to transform the noise or tone signal into a dc equivalency signal for the receive mode selected by front-panel control settings. The dc signal serves as a comparison voltage proportional to the signal and is connected to both range comparators and the log A/D converter.

(18) Underrange/Overrange Comparators. The output of the 1-Hz LPF is connected to one input of each comparator. The second input for the underrange comparator is Ref 1 and for the overrange comparator is Ref 2. Ref 1 and Ref 2 are derived from the +V Ref source via separate divider networks and are applied to the respective normal and inverted comparator input for under- and overrange.

(19) Impulse Noise Hits. The mean signal level is compared to an impulse hit reference level (threshold), derived from the impulse noise thumbwheels on the front panel. If a sudden burst of noise occurs (transient), the mean signal level exceeds threshold level (expressed in dBrn) and an impulse hit pulse is output. The pulses are counted by an associated counter at the threshold, the threshold +4 and the threshold +8 and subsequently displayed. The higher distortion is recorded

suppressing the lower, thus preventing duplication of counts.

(20) Phase Hits. Peak phase hits are detected by comparator circuits on the Phase Jitter board. The phase jitter level is compared to the reference level derived from the threshold (degrees) thumbwheels on the front panel. When the signal phase jitters exceeds the threshold set by the thumbwheel, an output pulse is generated. The pulses are counted by an associated counter and the number of phase hits is displayed. When a phase hit is recorded, impulse noise counters are suppressed.

(21) Gain Hits. A detected signal level from the Phase AGC board is set by the operator and compared to a positive and negative reference level by two comparators (A/D converters) on the A/D Converter board. An output pulse is produced by the associated comparator, to signify a positive or a negative gain hit, when the detected signal level exceeds the positive or negative reference level. The comparator outputs are fed to associated counters on the Integration and Hits Process board. When a gain hit is recorded, phase and impulse noise counters are suppressed.

(22) Dropouts. The preamplified receive signal is in this case fed to detector circuits on the Repeat and Transmit Function board to produce a level output. The level output or detected signal is compared to a fixed reference level (dropout threshold). When the detected signal level falls 12 dB below the threshold for no longer than 4 milliseconds, the event is counted by an associated counter of the Integration and Hits Process board. The count or number of dropouts is subsequently displayed. When a dropout occurs, all other counters are suppressed.

(23) Integrated Measurements. The Integration and Hits Process board contains circuits that record the number of gain hits, phase hits, impulse hits, and also the instances of signal dropouts that occur during the elapsed set by a toggle switch located on the front panel. Settings of 5 minutes, 15 minutes, or continuous are available.

Each occurrence of an integrated measurement is counted by an associated counter, and the counter-drive outputs drive the display circuits. The integration or accumulated time is determined by the 5/15/CONT switch on the front panel. When the time has elapsed, i.e., when the minutes count has finished, integration measurement stops. The counters are scanned in turn, by the operator, and each particular counter is presented in the display when the cursor is displayed over the associated parameter, i.e., time, gain, phase, impulse, impulse +4, impulse +8, dropouts and back to time.

4-3. MODEL 500B MAINFRAME. The main functional area of the 500B are the low voltage power supply, high voltage power supply, crt deflection amplifier, and random access memory. The relationships of these areas is shown in the simplified block diagram, figure 4-3, and in figure FO-22.

a. Low Voltage Power Supply (LVPS). The LVPS provides the power for operation of the associated plug-in module. (For circuit details, refer to figure FO-23.) The LVPS consists of three rectifier/regulator circuits to supply +15 V, -15 V, and +5 V power to the plug-in. The primary supply transformer is T1. Slide switch S1 connects the two primary windings in parallel for a 115 Vac source, or in series for 230 Vac. The output bridge rectifier DQ1 is regulated by a 7805 series regulator to supply +15 V. Potentiometer R2 provides adjustment of this voltage. The output of bridge rectifier DQ2 is regulated by another 7805 series regulator to supply -15 V. Potentiometer R5 provides adjustment of this voltage. The output of bridge rectifier DQ3 is regulated by pass transistor Q4, controlled by a 309 regulator, to supply

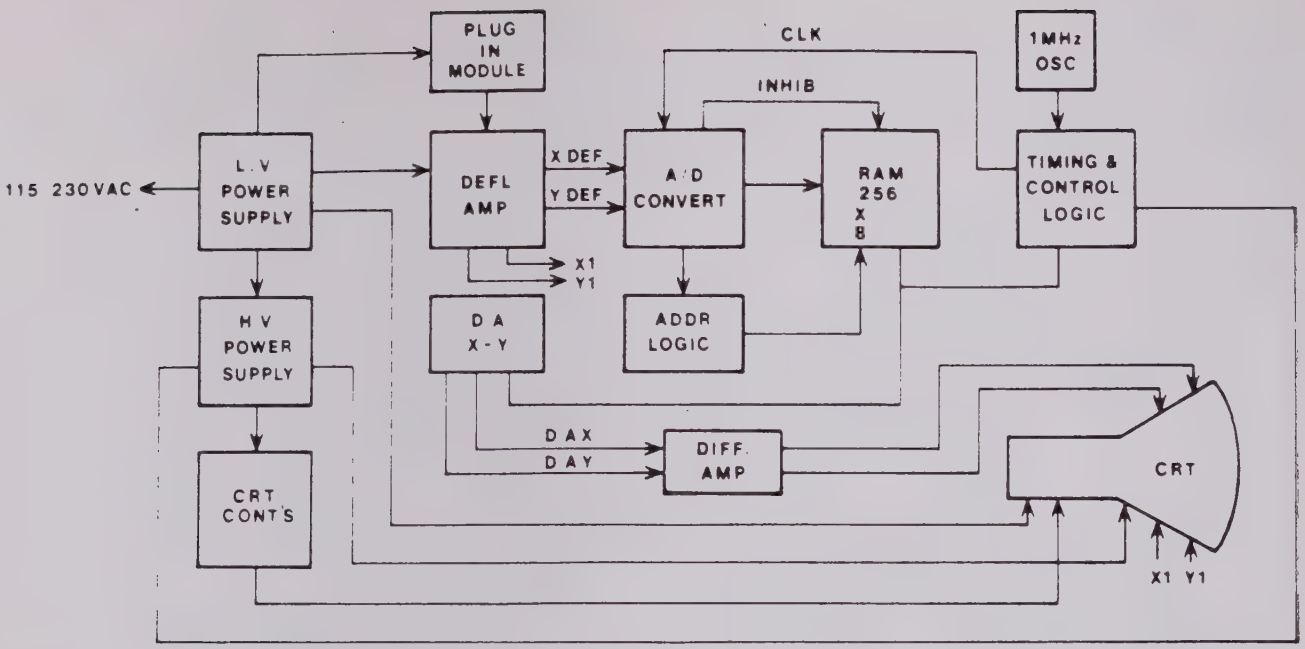

Figure 4-3. Mainframe, Simplified Block Diagram

+5 V dc. Because an overvoltage on the +5 V line could be critical, silicon control rectifier SCR1 and zener diode VR6 form a network to provide overvoltage protection for components on the line.

b. High Voltage Power Supply (HVPS). High voltage is necessary for operation of the deflection amplifier and the memory. Circuit details are shown in figure FO-24. Also refer to figure FO-22 for the relationship with the other mainframe elements.

Oscillator Q1-Q2 switches the -15 V input through alternate legs of the T1 primary at a rate of about 8 kHz. Transformer output T1-2/T1-3 is rectified by bridge CR2-CR3-CR4-CR5 and supplied as approximately +190 V to the crt astigmatism potentiometer. Transformer output T-1/T-12 is series rectified by voltage tripler CR6-CR7-CR8 and supplied as approximately -1800 V to the INTENSITY control. Part of the rectifier output is supplied through dropping resistor R4 to the crt at approximately -1750 V.

c. Deflection Amplifier and Memory. Data from the plug-in module are processed by the deflection amplifier, either for immediate display on the crt screen, or to be stored in a dual memory from which they can be retrieved for subsequent display. Refer to figure FO-22 for functional relationships, and to figures FO-25 and FO-26 for circuit details.

The outputs of the plug-in module are Y analog signals. These are fed into the A/D (analog-to-digital) converter which uses a successive approximate register (SAR). X-Y signals are alternately selected for A/D conversion by analog multiplexer IC25. The converter output is split for entry into either the X-register or the Y-register (B-quad register). From these registers, the signals are transmitted to the 4502 memory gates. When the mode switch commands the memory to display the data stored in the gates, the contents of the selected memory are made accessible to D/A (digital-to-analog) converters for reconversion to the analog state. X and Y signals are processed in separate D/A converters. The analog signals are fed to a differential amplifier which successively amplifies the X-Y signals. The amplified signals are then applied to the X-Y deflection plates of the crt.

The two memories have the function of storing data from separate plug-in test functions. Memory selection is controlled by a selector switch with the following positions:

A memory	Loads and accesses A memory.
B memory	Loads and accesses B memory.
A & B memory	Accesses contents of both memories for simultaneous display.

The mode switch controls the timing and control logic on the Random Access Memory board. The switch settings and instructions to the memory for each of the settings are:

CLEAR	Clear the memory.
LOAD	Load the selected memory.
INPUT	Display incoming information on crt screen.
MEMORY	Display contents of selected memory.
INPUT & MEM	Display contents of selected memory and input data simultaneously.
DYNAMIC	Display and update contents of B memory only.

CHAPTER 5

MAINTENANCE

5-1. INTRODUCTION. The procedural information contained in this chapter will assist technical personnel to maintain the Model 520B2-07/17 Universal Test System. These procedures are to be performed by trained technical personnel who are familiar with the equipment characteristics and who understand and apply all necessary safety precautions during any phase of maintenance or operation.

5-2. TEST EQUIPMENT REQUIRED. Test equipment necessary for checking, calibrating, or troubleshooting the 520B2-07/17 test system is listed in table 5-1. Substitute equipment may be used, provided that critical specifications are equivalent.

5-3. PREVENTIVE MAINTENANCE.

WARNING

Extremely dangerous voltage potentials are exposed when cover panels are removed from this equipment. Be certain to unplug mainframe power cable before performing the following cleaning and inspection routines.

CAUTION

Refer to paragraph 5-5b before removing plug-in circuit cards.

a. Cleaning.

(1) Clean front-panel and cabinet surfaces of equipment using a soft cloth lightly moistened with a mild detergent or soap solution. Rinse and wipe dry with a soft cloth.

(2) Clean inside surfaces of mainframe power supply and oscilloscope sections, and all circuit boards using a soft bristle brush and a small vacuum cleaner. Do not disturb components or internal wiring since this might eventually lead to equipment failure.

CAUTION

Do not use high-pressure air for cleaning purposes since dirt may be forced into critical areas, resulting in damage to the equipment or its operating parameters.

b. Inspection. Inspect all chassis-mounted components and circuit boards for any visual indications of potential failure. Items specifically to be checked are:

(1) Discolored or burned components, especially resistors.

(2) Leaky or ruptured capacitors.

(3) Worn or broken connector pins.

(4) Abraided wire insulation.

(5) Missing or broken control knobs and terminals.

(6) Scratched or defaced crt graticule.

Correct any deficiencies found during inspection.

5-4. PERFORMANCE VERIFICATION. The following procedures will verify the performance of the 520B2-07/17, and should be utilized in performing incoming inspection, routine maintenance, and general post-repair checks. The procedures require the use of calibration-dated test equipment equivalent to that listed in table 5-1.

Table 5-1. Test Equipment Required

Name	Critical specifications	*Type
Termination	600±1 ohms	600 ohms ±0.1% film resistor
Signal Generator	Freq: 10 Hz to 5 kHz Output: -30 to +30 dBm Impedance: 600 ohms	Hewlett-Packard 334A (generator section)
Distortion Analyzer	Freq Range: 10 Hz to 110 kHz Input: 0.1 to 100 V Distortion Measurement: 0.01 to 100%	Hewlett-Packard 334A (analyzer/voltmeter) section)
Oscilloscope	Vert: dc to 2 MHz	AN/USM-425(V)
Electronic Counter	Freq: 10 Hz to 5 kHz Period: 0.2 mS to 0.1 S	Hewlett-Packard 5328A
Digital Voltmeter	DC: 0 to 1000 V AC: 0 to 1000 V Digits: 5-1/2	Hewlett-Packard 3455A
High-voltage Probe	2500 Vdc	Hewlett-Packard 34111A or Fluke 80E
Hit Simulator Test Fixture	Compatible with Model 520B2-07/17	Halcyon 9500-1133-00 or Hewlett-Packard 214A Pulse Generator
Amplitude and Envelope Delay Equalizer	Freq: 250 to 3400 Hz Delay: 500 to 2183 uS	Halcyon 112B or Eldorado 650 Digital Delay Generator
Handset	Impedance: 600 ohms	Halcyon 1900-0001-00
Board Extender		Halcyon 8000-0071-00

*Any equivalent equipment may be substituted.

The verification procedures must be performed in the order presented. Inability to obtain correct results may be an indication of improper control settings or failure of the equipment. To be certain that the former can be eliminated, repeat any portion of the verification procedures which results in incorrect results before attempting to repair or calibrate the equipment.

NOTE

All controls, switches, and connector designations are referenced to figure 3-1.

a. Preliminary Instructions. Throughout the performance verification procedures, certain abbreviated instructions are given and are defined as follows:

(1) TUNE Transmitter Frequency. Using TUNE control (29), adjust to desired frequency, as indicated on FREQ display (23).

(2) Terminate Transmitter Output. Connect specified termination to either TRANSMIT jack (36) or TRANSMIT OUT terminals (49).

(3) Loop Transmitter to Receiver. Connect patch cable between TRANSMIT jack (36) and RECEIVE jack (2) or between TRANSMIT OUT and RECEIVE IN terminals (49).

(4) SELECT ( ) Mode. Depress either SELECT switch (8) until LED in mode indicator (9) lights at specified mode.

(5) Apply Tone to Receiver. Connect signal generator, at specified frequency and level, to either RECEIVE jack (2) or RECEIVE IN terminals (49).

(6) Set Hit Measurement. Depress hit measurements switch (18) until LED in hit measurements indicator (24) lights at specified measurement.

b. Model 520B2 Plug-In Verification.

(1) Initially set controls as follows:

POWER (42)	Out (off)
LEVEL IN (1)	-00
NOISE/TLP CORRECTION (3)	dBrn
600/900 (4)	600
DELAY DAMP (10)	LO
STD/STD+LF (14)	STD
DISPLAY OFFSET (17)	CAL
5/15/CONT (20)	5
GAIN threshold (25)	3
IMPULSE threshold (26)	99
PHASE threshold (27)	15
CONT/LOCK (33)	CONT
TRANSMIT FUNCTION (38)	NORM
MODE (46)	INPUT
NORM/EXPD (47) (rear panel)	NORM

(2) Depress POWER switch (42).

(3) SELECT AMP RESP, dB mode.

(4) Press RCV/XMT switch (19) so that transmit indicator (22) lights.

(5) TUNE transmitter frequency to 1004±1 Hz.

(6) Terminate transmitter output with 600±1 ohm termination and connect digital voltmeter (DVM) across termination.

(7) Set LEVEL OUT switches (37) to settings indicated below. DVM reading should be within range specified for each setting.

LEVEL OUT setting (dB)	DVM indication (Vac)
-00	0.76573 — 0.78357
-10	0.24215 — 0.24779
-20	0.07657 — 0.07836
-30	0.02421 — 0.02479
+01	0.85916 — 0.87918
-02	0.60824 — 0.66241
-03	0.54210 — 0.55472
-04	0.46674 — 0.49440
-05	0.43060 — 0.44063
-06	0.38377 — 0.39271
-07	0.34204 — 0.35001
-08	0.30484 — 0.31194
-09	0.27169 — 0.27802
+00	0.76573 — 0.78357

(8) SELECT DELAY, uS mode. DVM should read between 0.76573 and 0.78357 Vac.

(9) SELECT Ø JITTER, DEG. mode. DVM should read between 0.76573 and 0.78357 Vac.

(10) SELECT AMP RESP, dB mode.

(11) Apply 1000±10 Hz tone from signal generator to receiver. Using DVM across signal generator output, set generator level to 0.77460 Vac. Display (13) should indicate 0.0±0.1 dB.

(12) Vary DISPLAY OFFSET control (17). Display (13) should range from 0.0±0.2 dB to -1.0±0.2 dB.

(13) Set DISPLAY OFFSET control to CAL and LEVEL IN switches (1) to -10. OUT OF RANGE LED (12) should light and display (13) should be blanked.

(14) Set LEVEL IN switches (1) to -09. Display (13) should read +9.0 ±0.1 dB.

(15) Reduce signal generator output to 0.24495 Vac. Set LEVEL IN switches (1) to settings indicated below. Display (13) reading should be as specified for each setting.

LEVEL IN setting (dB)	Display (dBm)
-00	-10.0±0.1
-01	-9.0±0.1
+02	-12.0±0.1
+03	-13.0±0.1
+04	-14.0±0.1
+05	-15.0±0.1
+06	-16.0±0.1
+07	-17.0±0.1
+08	-18.0±0.1
+09	-19.9±0.1
+00	-10.0±0.1

(16) Reduce signal generator output to 0.07746 Vac. Display (13) should indicate -20.0±0.1 dBm.

(17) Reduce signal generator output to 0.02449 Vac.

(18) Set LEVEL IN switches (1) to settings indicated below. Display (13) reading should be as specified for each setting.

LEVEL IN setting (dB)	Display (dBm)
-00	-30.0±0.1
-10	-20.0±0.1
-20	-10.0±0.1
-30	0.0±0.1
+00	-30.0±0.1

(19) Set CONT/LOCK switch (33) to LOCK and TUNE transmitter frequency from below 200 Hz to above 4000 Hz. FREQ display (23) should indicate that frequency locks in 100.4-Hz steps.

(20) Set SGL/AUTO/MAN switch (28) to AUTO, CONT/LOCK switch (33) to CONT, and turn SWEEP RATE control (31) fully clockwise. FREQ display (23) should sweep from 225±25 Hz to 3400±100 Hz in 1.5 seconds.

(21) Set SGL/AUTO/MAN switch (28) to SGL, then back to AUTO, and again to SGL. FREQ display (23) should indicate limits of 225±25 Hz and 3400±100 Hz.

(22) Set SGL/AUTO/MAN switch (28) to MAN and TUNE transmitter frequency to 300±3 Hz.

(23) Connnect distortion analyzer to TRANSMIT jack (36) or TRANSMIT OUT terminals (49) and check distortion, which should not exceed -46 dB for units with serial number 3999 and below and - 50 dB for units with serial numbers above 3999.

(24) TUNE transmitter frequency to 1000 +/- 10Hz and check distrotion; repeat at 3500 Hz. Distortion at each frequency should not exceed -46 dB for units with serial number 3999 and below and - 50 dB for units with serial numbers above 3999.

(25) Connect counter to signal generator output and set generator frequency to 1000±1 Hz. Set generator output for DVM reading of 0.77460 Vac.

(26) Connect signal generator to receiver and press RCV/XMT switch (19). RCV indicator (21) should light and FREQ display (23) should indicate 1000 ±1 Hz.

(27) Disconnect signal generator and transmitter termination.

(28) SELECT NOISE, dBrn0 mode and set C-MSG/3 KHz switch to 3 KHz.

(29) Loop transmitter to receiver. Display (13) should indicate less than 40 dBrn0.

(30) Press S/N switch (16). Display should change to 90 dBrn0.

(31) Change LEVEL OUT switch (37) setting from +00 to +07 in 1-dB increments. Display (13) should change 1 dB for each switch step.

(32) Disconnect transmitter-to-receiver loop and reconnect signal generator to receiver.

(33) Change signal generator frequency to 995 Hz and 1025 Hz. At

each frequency, display (13) should indicate 40 dBrn0 or less. Disconnect signal generator.

(34) Set C-MSG/3 KHz switch (6) to C-MSG, and repeat steps (29) through (32).

(35) Set signal generator to frequencies indicated below, maintaining output constant at 0.77460 Vac. Display (13) indication should be as specified.

Frequency (Hz)	Display (dBrn)
400±1	78±1
3000±1	87±1
4000±1	75±2

(36) Change signal generator frequency to 1700±1 Hz, keeping output level at 0.77460 Vac.

(37) Set C-MSG/3 KHz switch (6) to 3 KHz. Display (13) should indicate 89±1 dBrn.

(38) Set NOISE/TLP CORRECTION switch (3) to dBrn0. Display (13) should indicate 76±1 dBrn. Disconnect signal generator.

(39) Set NOISE/TLP CORRECTION switch (3) to dBrn, C-MSG/3 KHz switch (6) to C-MSG, and SELECT Ø JITTER, DEG. mode.

(40) Loop transmitter to receiver. 1004 LED (32) should be on.

(41) Set LEVEL IN switches (1) to 00 and LEVEL OUT switches (37) to -10. Display should indicate less than 0.3 degree after 7 seconds have elapsed.

(42) Connect signal generator to RECEIVE jack (2) or RECEIVE IN terminals (49), whichever is not used to loop transmitter and receiver.

(43) Connect counter, in period-average mode, to signal generator.

(44) Tune signal generator to frequencies shown below, but adjust for specified period, indicated on counter, to establish accuracy of generator frequency. Signal generator output level must be -30 dBm. Display (13) should be as shown for each frequency.

Frequency (Hz)	Period (mS)	Display (degrees)
304	3.2895	Less than 1
504	1.9841	Less than 3
704	1.4205	11.5 +0.7,-1.5
744	1.3441	11.5±0.7
904	1.1062	11.5±0.7
984	1.1063	11.5±0.7
994	1.0060	Less than 8
999	1.0010	Less than 3
1002	0.9980	Less than 1
1006	0.9940	Less than 1
1009	0.9911	Less than 3
1014	0.9862	Less than 8
1024	0.9766	11.5±0.7
1104	0.9058	11.5±0.7
1244	0.8039	11.5±0.7
1304	0.7669	11.5 +0.7,-1.5
1504	0.6649	Less than 3
1704	0.5869	Less than 1

(45) Set STD/STD+LF switch (14) to STD+LF. Repeat step (44) for the following frequencies.

Frequency (Hz)	Period (mS)	Display (degrees)
804	1.2438	11.5±0.7
1000	1.0000	11.5±0.7
1002	0.9980	Less than 8
1003	0.9970	Less than 3
1005	0.9950	Less than 3
1006	0.9940	Less than 8
1008	0.9921	11.5±0.7
1204	0.8306	11.5±0.7

(46) Disconnect signal generator. Display (13) should indicate 0.3 degrees or less.

(47) Set LEVEL OUT switches (37) to -00, 2nd/3rd switch (14) to 2nd, and SELECT NONLINEAR, dB mode. 4 TONE P/AR indicator should light.

(48) Connect DVM and 600-ohm termination to transmitter output. DMV should read between 0.73127 and 0.82049 Vac.

(49) Press and hold S/N switch (16). DVM reading should remain between 0.73127 and 0.82049 Vac. Release S/N switch.

(50) Connect signal generator to RECEIVE jack (2) or RECEIVE IN terminals (49). Connect DVM to signal generator output.

(51) Vary signal generator over frequency range of 503 to 537 Hz, keeping signal generator output at 0.77460 Vac. Display (13) should indicate approximately -3 dBm, with less than 1-dB variance over frequency range.

(52) Repeat step (51) over range of 2223 to 2257 Hz.

(53) Set 2nd/3rd switch (14) to 3rd.

(54) Tune signal generator over frequency range of 1877 to 1923 Hz, keeping signal generator output at 0.77460 Vac. Display (13) should indicate approximately 0 dBm, with less than 1-dB variation over frequency range.

(55) Disconnect signal generator and 600-ohm termination. Loop transmitter to receiver. Display (13) should indicate less than -70 dB for either setting of 2nd/3rd switch (14).

(56) SELECT AMP RESP, dB mode and set 2nd/3rd switch (14) to 2nd. Connect a 1-uF (±10%) capacitor across RECEIVE IN terminals (49).

(57) TUNE transmitter frequency until display (13) indicates -3.0±0.1 dBm. Record frequency at which this occurs.

(58) SELECT DELAY, uS mode and press REF switch (16). Display (13) should read less than 2 uS.

(59) Remove capacitor. Display (13) should indicate, within 10 uS, delay shown in table 5-2 for frequency recorded in step (57). Display will indicate a minus sign.

(60) Set DELAY DAMP switch (10) to HI and 83 1/3 - 25 switch to 25. Press REF switch (16); display (13) should read less than 2 uS.

(61) Turn SYNC control (15). Display (13) should change at least 20 uS in both directions.

(62) Set 83 1/3 - 25 switch to 83 1/3 and turn SYNC control (15). Display should change at least 5 uS in both directions.

(63) Set 83 1/3 - 25 switch to 25 and press REF switch (16). Connect

Table 5-2. Receiver Delay Test

Frequency (Hz)	Delay (uS)	Frequency (Hz)	Delay (uS)
490	162	516	154
491	162	517	154
492	162	518	154
493	161	519	153
494	161	520	153
495	161	521	153
496	160	522	152
497	160	523	152
498	160	524	152
499	160	525	152
500	159	526	151
501	159	527	151
502	159	528	151
503	158	529	150
504	158	530	150
505	158	531	150
506	157	532	149
507	157	533	149
508	157	534	149
509	156	535	148
510	156	536	148
511	156	537	148
512	155	538	147
513	155	539	147
514	155	540	147
515	155		

a 1-uF (±10%) capacitor across RECEIVE IN terminals (49). Display (13) should indicate, within 10 uS, delay shown in table 5-2 for frequency recorded in step (57). Display will indicate a plus sign.

(64) Disconnect transmitter-to-receiver loop and apply 1000-Hz tone from signal generator to receiver. Set generator output to 0.77460 Vac.

(65) SELECT REPEAT mode. Terminate transmitter output and measure voltage across termination. DVM should indicate between 0.76573 and 0.78357 Vac.

(66) Reduce signal generator output to 0.24495 Vac. Voltage across 600-ohm termination should be between 0.23663 and 0.25356 Vac.

(67) Reduce signal generator output to 0.07746 Vac. Voltage across 600-ohm termination should be between 0.07313 and 0.08205 Vac. Disconnect signal generator and 600-ohm termination.

(68) SELECT HIT MEASUREMENTS mode and set hit measurement to TIME. Press START switch (16); TIME LED in indicator (24) should be flashing.

(69) Set hit measurement to GAIN and set GAIN threshold switch (25) to 2. GAIN indicator (24) should be on, but display (13) should indicate zero.

(70) SELECT Ø JITTER, DEG. mode and set LEVEL IN (1) and LEVEL OUT (37) switches to 00.

(71) Loop transmitter to receiver and connect signal generator to unused receiver input. Set signal generator frequency to 1084±1 Hz.

(72) Adjust signal generator output level for reading of 31 degrees on display (13).

(73) SELECT HIT MEASUREMENTS mode and set hit measurement to PHASE. Display (13) should register phase hits.

(74) Set hit measurement to all three IMPULSE settings (0, +4, and +8). Display should indicate zero for all three IMPULSE settings.

(75) Set hit measurement to PHASE and connect oscilloscope to pin 2 of PAR & COUNTS OUTPUTS connector (48). Oscilloscope should show a pulse each time a phase hit is registered on display (13).

(76) Set PHASE threshold switches (27) to 20. Display (13) should indicate zero.

(77) Set PHASE threshold switches (27) to 10 and hit measurement to DROPOUT. Connect oscilloscope to pin 6 of PAR & COUNTS OUTPUTS connector (48).

(78) Connect hit simulator test fixture in series with loop patch cable and set for dropout mode. Display (13) should indicate dropout hits and oscilloscope should show a pulse each time a hit is registered.

(79) Sequentially set hit measurement to GAIN, PHASE, and all three IMPULSE settings. Display (13) should not indicate hits.

(80) Set hit measurement to GAIN, and set GAIN threshold switch (25) to 3. Connect oscilloscope to pin 1 of PAR & COUNTS OUTPUTS connector (48).

(81) Set hit simulator test fixture for positive gain hits and vary duration of hits from 3.6 through 4.4 mS. Display (13) should register gain hits and oscilloscope should show a pulse each time a hit is registered.

(82) Repeat step (81) for negative gain hits.

(83) Set GAIN threshold switch (25) to 4. Display (13) should not indicate hits.

(84) Set NOISE/TLP CORRECTION switch (3) to dBrn, TERM/BRDG switch

(5) to BRDG, and C-MSG/3 KHz switch to C-MSG. SELECT NOISE, dBrn0 mode.

(85) Connect signal generator to RECEIVER IN terminals (49) and connect oscilloscope to pin 3 of PAR & COUNTS OUTPUTS connector (48).

(86) With LEVEL IN (1) and LEVEL OUT (37) switches at 00, TUNE transmitter frequency to 1004±1 Hz and set signal generator frequency to 1700±1 Hz. Adjust signal generator level so that display (13) just changes from 78 to 79. Vary level by ±1 dB to verify threshold setting accuracy.

(87) Set IMPULSE threshold switches (26) to 84, SELECT HIT MEASUREMENTS mode, and set hit measurement to IMPULSE 0. Display (13) should register impulse hits and oscilloscope should show a pulse each time a hit is registered.

(88) Set IMPULSE threshold switches (26) to 85. Display (13) should not register hits.

(89) Set hit measurement to IMPULSE +4. Display (13) should not register hits.

(90) Set IMPULSE threshold switches (26) to 80 and depress S/N-REF-START switch (16). Display should indicate hits. Connect oscilloscope to pin 4 of PAR & COUNTS OUTPUTS connector (48) and confirm that a pulse appears each time a hit is registered.

(91) Set IMPULSE threshold switches (26) to 81. Display (13) should stop registering hits.

(92) Set hit measurement to IMPULSE +8. There should be no change in display (13).

(93) Connect oscilloscope to pin 5 of PAR & COUNTS OUTPUTS connector (48) and set IMPULSE threshold switches (26) to 76. Display (13) should register impulse hits and oscilloscope should show a pulse each time a hit is registered.

(94) Set IMPULSE threshold switches (26) to 77. Display (13) should stop registering hits.

(95) Disconnect all test equipment.

(96) Loop transmitter to receiver, set TERM/BRDG switch (5) to TERM, and SELECT AMP RESP, dB mode.

(97) TUNE transmitter frequency to 1000±10 Hz. Turn rear-panel VOLUME control (50) over its full range to check audible output volume.

(98) Set 600/900 switch (4) to 900. Display (13) should indicate 0.0 ±0.2 dBm. Reset switch to 600.

(99) Set LEVEL OUT switches (37) to -10 and set TERM/BRDG switch (5) to TERM. Display (13) should indicate -4.0±0.2 dBm.

(100) Reset TERM/BRDG switch (5) to TERM, set LEVEL IN switches (1) to -20 and LEVEL OUT switches (37) to 00.

(101) Connect handset to HDST jack (40) and listen for 1000-Hz tone.

(102) Set TRANSMIT FUNCTION switch (38) to TALK. Talk into handset and listen for voice sidetone.

(103) SELECT NOISE, dBrn0 mode. Set TRANSMIT FUNCTION switch (38) to QUIET, C-MSG/3 KHz switch (6) to C-MSG, LEVEL IN switches (1) to 00, and NOISE/TLP CORRECTION switch (3) to dBrn. Display (13) should indicate less than 10 dBrn.

(104) Set TRANSMIT FUNCTION switch (38) to NORM and SELECT AMP RESP, dB mode.

(105) TUNE transmitter to 1000 ±1 Hz. Mainframe crt trace should be at 1.0 KHz ±3% (±0.5 minor division).

(106) Measure voltage at pin 14 of rear-panel PAR & COUNTS OUTPUTS connector (48); it should be +1.00±0.06 Vdc.

(107) TUNE transmitter to 3000 ±1 Hz. Crt trace should be at 3.0 KHz ±3%.

(108) Measure voltage at pin 14 of PAR & COUNTS OUTPUTS connector (48); it should be +1.00±0.06 Vdc. Disconnect transmitter-to-receiver loop.

NOTE

Use 600-ohm load to set up signal generator.

(109) Apply 1000±4 Hz tone from signal generator to receiver and set level to 0.77460 Vac. Crt trace should be at 0±0.2 dB.

(110) Measure voltage at pin 13 of PAR & COUNTS OUTPUTS connector (48); it should be +1.00±0.1 Vdc in both positions of NORM/EXPD switch (47). Leave switch at EXPD.

(111) Reduce signal generator output to 0.48874 Vac. Crt trace should be at -4±0.2 dB.

(112) Measure voltage at pin 13 of PAR & COUNTS OUTPUTS connector (48); it should be -1.00±0.10 Vdc.

(113) Set NORM/EXPD switch (47) to NORM. Voltage at pin 13 should change to 0.20±0.05 Vdc.

(114) Reduce signal generator output to 0.24495 Vac. Crt trace should be at -10±0.2 dB.

(115) Measure voltage at pin 13 of PAR & COUNTS OUTPUTS connector (48); it should be -1.00±0.10 Vdc. Disconnect signal generator.

(116) Connect input connector of equalizer to TRANSMIT jack (36) and equalizer output to RECEIVE jack (1).

(117) SELECT DELAY, uS mode. Set 83 1/3 - 25 switch (35) to 25, DELAY DAMP switch (10) to LO, SEL/AUTO/MAN switch (28) to MAN, and CONT/LOCK switch (33) to LOCK. TUNE transmitter to 1004±1 Hz and press REF switch (16). Crt trace should be at 0 uSec.

(118) Measure voltage at pin 13 of PAR & COUNTS OUTPUTS connector (48); it should be -1.00±0.10 Vdc. Set NORM/EXPD switch to EXPD; voltage should stay within same limits and delay bounce on crt should be less than one division.

(119) Adjust equalizer for display (13) reading of 900±5 uS. Crt trace should be at 900±50 uSec.

(120) Measure voltage at pin 13 of PAR & COUNTS OUTPUTS connector (48); it should be 2.0±0.1 Vdc.

(121) Set 83 1/3 - 25 switch (36) to 83 1/3 and press REF switch (16). Crt trace should be at 0 uSec.

(122) Measure voltage at pin 13 of PAR & COUNTS OUTPUTS connector (48); it should be -1.00±0.05 Vdc in both positions of NORM/EXPD switch (47). Crt bounce between switch positions should be less than one minor division. Leave switch at NORM.

(123) Adjust equalizer for display (13) reading of 2000±10 uS. Measure voltage at pin 13 of PAR & COUNTS OUTPUTS connector (48); it should be 1.0±0.1 Vdc. Disconnect equalizer.

(124) Set TRANSMIT FUNCTION switch (38) to XFR and connect signal generator to TRANSMIT jack (36) or TRANSMIT OUT terminals (49). Using a 600-ohm load, set signal generator frequency to 1000±10 Hz and level to 0.77460 Vac.

(125) SELECT AMP RESP, dB mode. Display (13) should indicate 0.0±0.2 dBm. Disconnect signal generator.

(126) Set CONT/SF switch (7) to SF and CONT/LOCK switch (33) to LOCK.

TUNE transmitter frequency from 2000 to 3000 Hz. There should be a skip band from 2475 Hz or lower to 2725 Hz or higher.

(127) SELECT HIT MEASUREMENTS mode and set hit measurement to TIME. Set 5/15/CONT switch (20) to 5.

(128) Press START switch (16). Display (13) should indicate elapsed time (in minutes) since START switch was pressed, and TIME LED (24) should be flashing. After 5 minutes, TIME LED should stop flashing.

(129) Set 5/15/CONT switch (20) to 15 and press START switch (16). After 15 minutes, TIME LED should stop flashing.

(130) Set 5/15/CONT switch (20) to CONT and press START switch (16). Display (13) and TIME LED should continue to indicate beyond 15 minutes.

(131) Loop transmitter to receiver, SELECT Ø JITTER, DEG. mode, and observe SID pattern on mainframe crt. Horizontal limits should be 0.5 KHz (low) and 3.5 KHz (high). Vertical limits should be -12.5 dB (low) and +2.5 dB (high).

(132) Set STD/SID+LF switch (14) to STD and turn SYNC control (14) to verify that SID pattern can be adjusted in either direction.

(133) Set TRANSMIT FUNCTION switch (38) to NORM and connect signal generator to RECEIVE jack (2). Decrease signal generator frequency until 1004 Hz LOST LED (11) flickers; frequency must be 990 Hz or lower. Increase signal generator frequency until 1004 Hz LOST LED again flickers; frequency must be 1030 Hz or higher.

(134) TUNE transmitter to 1004 Hz. 1004 Hz LOST LED (11) should be off. Vary transmitter frequency; LED should start flashing at 990 Hz or lower, and at 1030 Hz or higher.

NOTE

The following steps are applicable only to Model 520B2-17.

(135) Set 520B2 mode to P/AR. Set LEVEL OUT switches (37) to settings indicated below. Display (13) reading should be as specified below for each setting.

LEVEL OUT setting (dB)	Display
00	100±1
-10	100±1
-20	100±2
-30	100±2

(136) Set LEVEL OUT switches (37) to 00 and reduce LEVEL IN switch (1) settings in steps of 1 dB. Display (13) must remain at 100±1 through LEVEL IN switch setting of -15. Thereafter, display should follow switch settings down to zero reading, which must occur before LEVEL IN switch setting of -39. Remove transmitter-to-receiver loop.

c. Model 500B Mainframe Verification.

(1) Verify that MODE switch (46) is set to INPUT and NORM/EXPD switch (47) is set to NORM.

(2) Using a 600-ohm load, set signal generator level to 0.775±0.090 Vac and apply 1000±1 Hz tone to receiver. Adjust AST (51), FOCUS (44), and INTENSITY (45) controls for sharp, clear dot, which should be at 0±0.1 dB and 1 KHz ±3%.

(3) Reduce signal generator output to 0.245±0.003 Vac. Crt dot should move to -10±0.1 dB.

(4) Measure voltage between VERTICAL OUT terminals (52); it should be -1.0±0.3 Vdc.

(5) Change signal generator frequency to 3000 Hz and set output level to 0.775±0.090 Vac. Crt dot should move to 3.0 KHz ±3%.

(6) Measure voltage between VERTICAL OUT terminals (52); it should be 1.0±0.3 Vdc.

(7) Connect a 1-uF (±10%) capacitor across RECEIVE IN terminals (49). Tune signal generator down to about 150 Hz. Crt dot should distort to a vertical line at 0.2 KHz ±3%.

(8) Set MEMORY switch (41) to A. Set MODE switch (46) to CLEAR, then to MEMORY. Crt should display a horizontal line along bottom of screen from 0.2 to 4.0 KHz, and no dots above line between those frequencies.

(9) Set MODE switch (46) to LOAD, and tune signal generator from 150 to 4200 Hz. Set MODE switch to MEMORY. Crt should display a curve that slopes smoothly downward from 0.2 KHz and intersects a clear line at 3±0.2 KHz.

(10) Set MEMORY switch (41) to B and MODE switch (46) to CLEAR. Crt display should be same as in step (8).

(11) Set MODE switch (46) to DYNAMIC. Observe crt display and slowly tune signal generator from 4200 to 150 Hz. Data points should change only at frequency being scanned.

(12) Set MEMORY switch (41) to A&B. Crt traces displayed in steps (8) and (10) should overlay each other.

(13) Remove capacitor from RECEIVE IN terminals (49). Set MEMORY switch (41) to A and MODE switch (46) first to CLEAR, then to LOAD. Observe crt display and slowly tune signal generator from 150 to 4200 Hz. Set MODE switch to MEMORY. Crt should display a horizontal line at 0.0±0.2 dB from 0.2 to 4 KHz.

(14) Set MODE switch (46) to INPUT & MEM. Reduce signal generator output to 0.245±0.003 Vac (-10 dBm). Crt should display a dot at -10 dB that follows signal generator frequency and A&B memory data displayed in step (12). Changing signal generator frequency should not update A&B memory data.

(15) Set MODE switch (46) to DYNAMIC and MEMORY switch (41) to B. Reduce signal generator output to approximately 0.5 dBm. Crt should display a line at 0.0±0.2 dB from 0.2 to 4 KHz, and a dot at a clear line level that follows signal generator frequency as it is varied, but does not update line at 0 dB.

(16) Set MODE switch (46) to MEMORY and MEMORY switch (41) to A&B. Data in A&B will be displayed.

5-5. REPAIR AND REPLACEMENT. This portion of the manual provides instructions for removal, disassembly, replacement, repair, and reassembly of components and assemblies when such procedures are not obvious upon inspection of the equipment.

a. Model 520B2 Plug-In.

(1) Removal. Turn rear-panel locking screw (56, figure 3-1) until plug-in is released, and then push forward on rear panel of plug-in.

(2) Replacement. Carefully guide plug-in onto the mainframe rails and push slowly until unit is fully seated. At this point, rear-panel locking screw will engage captive nut. Tighten screw carefully while gently pressing on corners of front panel.

NOTE

Because of minute dimensional differences, the PC board on the plug-in module may not line up precisely with the connector on the mainframe when the module is first inserted. If this occurs, gently apply upward or downward pressure on the plug-in rear panel in order to align the connector and locking screw.

b. Plug-in Circuit Cards. Plug-in circuit cards may be removed by lifting

up the card extractor at each side of the card and pulling the card straight up. When reinserting the card in its connector, be sure the card is in the card guides, then press down on the card extractors.

CAUTION

Circuit cards 1A2 through 1A15 are not connector-keyed to preclude inserting a card in the wrong connector or reversing the card in its connector. Figure 5-1 shows the location and orientation of each card in the 520B2 Plug-In. Be certain that each card is replaced in its proper position.

NOTE

Figure 5-1 indicates both the reference designator and abbreviated part number of each plug-in card. The abbreviated part number is stamped on the extractor which is to be positioned next to the center divider of the plug-in unit. The part number is also silk-screened on the top cover of the 520B2 Plug-In.

c. Model 520B2 Front Panel Assembly.

(1) Removal and Disassembly.

(a) Remove 520B2 Plug-In from mainframe; refer to paragraph 5-5a.

(b) Remove all circuit cards from plug-in.

(c) Release harness connectors (J1, J2 and J8, figure 6-3) from Interconnect Circuit Card (A3). Note position of harness routing between Interconnect Circuit Card and front panel assembly.

(d) Remove two screws (1) and lockwashers (3) which secure Vertical Interconnect Circuit Card (A5, figure 6-4) to enclosure brackets (MP6 and MP7, figure 6-3). Disconnect all harnesses and cables from A5 and remove A5.

(e) Remove brackets (MP6 and MP7) by removing screws (1) and lockwashers (3).

(f) Carefully withdraw Vertical Interconnect Circuit Card from edge connector on Interconnect Circuit Card, leaving it attached to front panel assembly by interconnecting ribbon cables.

(g) Remove nut (2) from each corner of front panel.

(h) Carefully remove front panel assembly from enclosure.

(i) Note positions of ribbon cables which connect Vertical Interconnect Circuit Card (A5, figure 6-4) to remainder of front panel assembly. Disconnect ribbon cable connectors from A5 to permit removal of that board.

(j) Remove two screws and lockwashers which secure Preamp and Mode Select Circuit Card (A4) to Front Panel Display Circuit Card (A1).

(k) Gently release A4 from LEVEL IN (S5) and LEVEL OUT (S4) switch connectors and withdraw A4. Note position of plastic spacers under insulator (MP69).

(m) Remove two screws (1) and spacers (MP55 and MP56) which secure Integration Thumbwheel Circuit Card (A3) to Front Panel Display Circuit Card (A1).

(n) Remove two nuts and lockwashers from side of thumbwheel switch on A3.

(p) Remove A3 while disconnecting cable from circuit card connector.

(q) Remove insulator (MP68) from Front Panel Display Circuit Card (A1). Note position of plastic spacers under insulator.

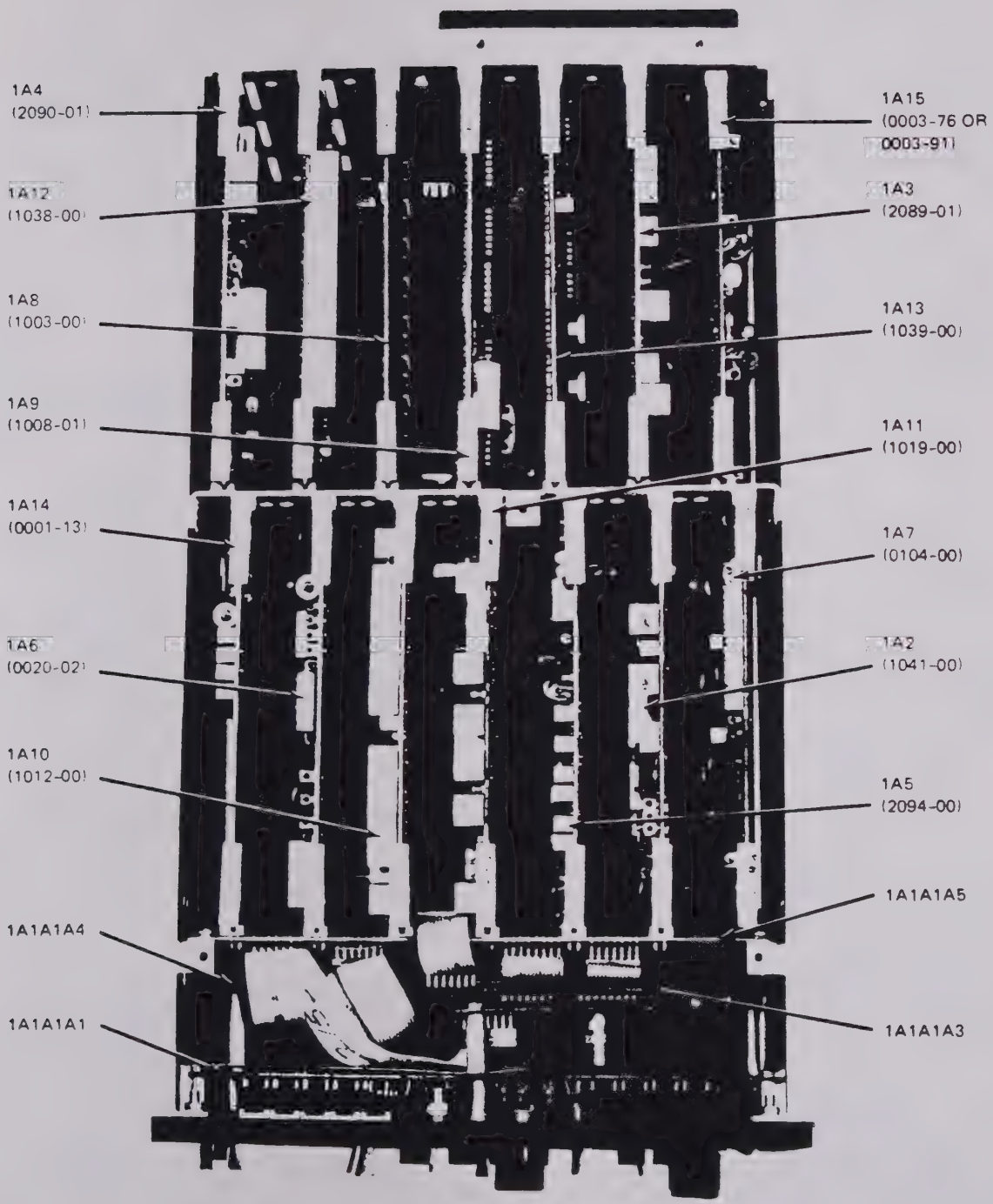

Figure 5-1. Model 520B2 with Top Cover Removed

(r) Remove nuts from all front-panel controls and switches mounted on A1.

(s) Remove A1 while disconnecting cables from circuit card.

(2) Reassembly. Reassemble front panel assembly in reverse order of disassembly. Be certain to replace plastic spacers in their correct positions under insulators (MP68 and MP69, figure 6-4).

d. Power Supply.

(1) Removal and Disassembly.

(a) Rest mainframe upside down on work bench.

(b) Remove heat sink guard (MP15, figure 6-28) by removing two screws (5).

(c) Remove four screws (3) and lower Power Supply onto bench.

(d) Separate terminal strip (TB1) from Power Supply by removing two screws (10). Note that a black wire was connected under right-hand screw (facing rear of mainframe).

(e) Remove fanning strip (J1, figure 6-29) from TB1.

(f) Remove two heat sink brackets (MP4 and MP5, figure 6-28) by removing two screws (5).

(g) Remove perforated cover (MP1, figure 6-29) by removing four screws (3), lockwashers (2), and flat washers (1).

(2) Reassembly and Replacement. Reassemble and replace Power Supply by reversing the preceding steps. Be certain to replace black wire under right-hand mounting screw of TB1.

e. Cathode-Ray Tube. (See figure 6-27).

(1) Removal.

(a) Remove crt bezel (MP6), graticule (MP5), and color enhancer (MP25) by removing four screws (9).

WARNING

Use a protective face mask and work gloves when removing and replacing the crt.

(b) Remove socket (A1A2J6) from crt and remove connector (J1) from CRT Deflection Circuit Card (A4).

(c) Loosen screw (10) on crt shield (MP7).

(d) Press forward on crt (V1) and extract it through front-panel opening.

(2) Replacement.

(a) Assemble connector pins (MP27 and MP28) and connector (J1) to leads from rotation yoke of new crt.

(b) Wrap rear of crt and front, just behind faceplate, with four layers of 1/2-inch Teflon tape; see figure 5-2. Then pad crt with 3/4- by 1/4-inch adhesive foam-rubber tape as shown.

(c) Orient crt so that gap between pins on base is toward left side of mainframe. Then insert crt into mainframe until faceplate is even with inside of front panel.

NOTE

Be sure to bring J1 out of rear of crt shield as tube is inserted.

(d) Replace color enhancer, graticule, and bezel.

(e) Tighten screw on crt shield.

(f) Place socket on crt base and connect J1 to circuit card A4.

(g) Energize 520B2-07/17 and obtain trace on crt.

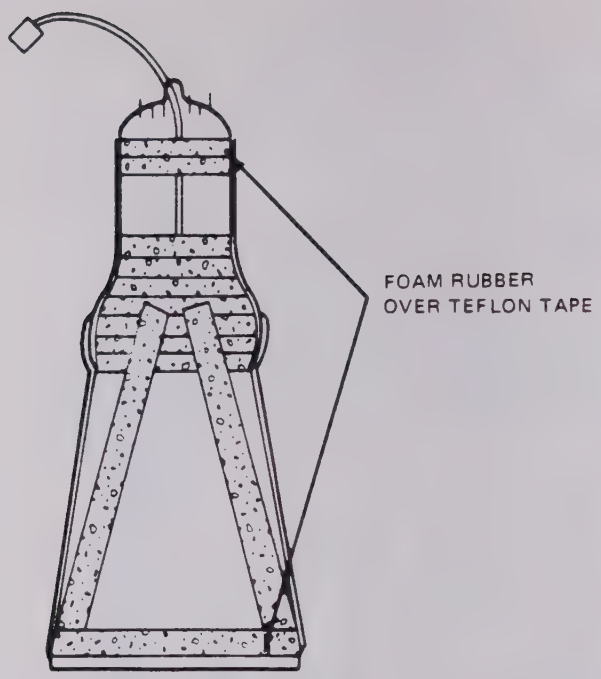

Figure 5-2. Installation of Foam Rubber Padding on Cathode-Ray Tube

(h) Adjust FOCUS (44, figure 3-1), INTENSITY (45), and AST (51) controls for sharpest trace.

(i) Adjust R3 on CRT Deflection Circuit Card 2A4 (figure 5-3) to align crt trace with graticule lines.

f. General Repair Procedures. When performing corrective maintenance on the equipment, the following safety precautions and good workmanship practices shall be incorporated into all related activities.

(1) Disconnect Power. All corrective maintenance procedures shall be accomplished with power removed from the equipment. Disconnect primary power cable from power outlet.

(2) Proper Tools. Use of proper tools to achieve correct results shall be a requirement. Always use the tool designed for a specific job.

(3) Parts Removal. Do not unnecessarily remove components and semiconductor devices from the circuit card assemblies. Before inserting new components be certain that lead wires/pins are properly aligned so damage does not result. Replacement parts must be installed with correct orientation and/or observance of polarity.

(4) Wire and Harness Removal. In the absence of clear identification, always tag wires that are being disconnected and harnesses or cables that are being unplugged.

(5) Soldering. Soldering of wires and components must be accomplished only by personnel familiar with the technique that can produce the desired results without risking damage to or causing future malfunction of the equipment. Use only a grounded 40- to 50-watt soldering iron along with electronic-grade resin-core solder.

When soldering semiconductor devices and all small components, be sure to use a heat-sink tool or long-nosed pliers connected to the component lead while each is being soldered. Allow the soldered connection to cool before removing the heat sink. Clean all dirt and solder flux from the component and circuit card by liberal application of isopropyl alcohol or a freon-type solvent.

A broken or burned section of etched board conductor can be repaired by bridging the damaged section with a length of tinned copper wire. Remove any protective coating from the area, clean, then overlay the new wire section and solder. Use only sufficient heat to ensure a good connection; excess heat will cause lifting of the circuit trace from the printed circuit board.

5-6. CALIBRATION. The following procedures should be used on a periodic basis in conjunction with scheduled maintenance routines or after equipment repairs. A list of test equipment required for calibration is provided in table 5-1.

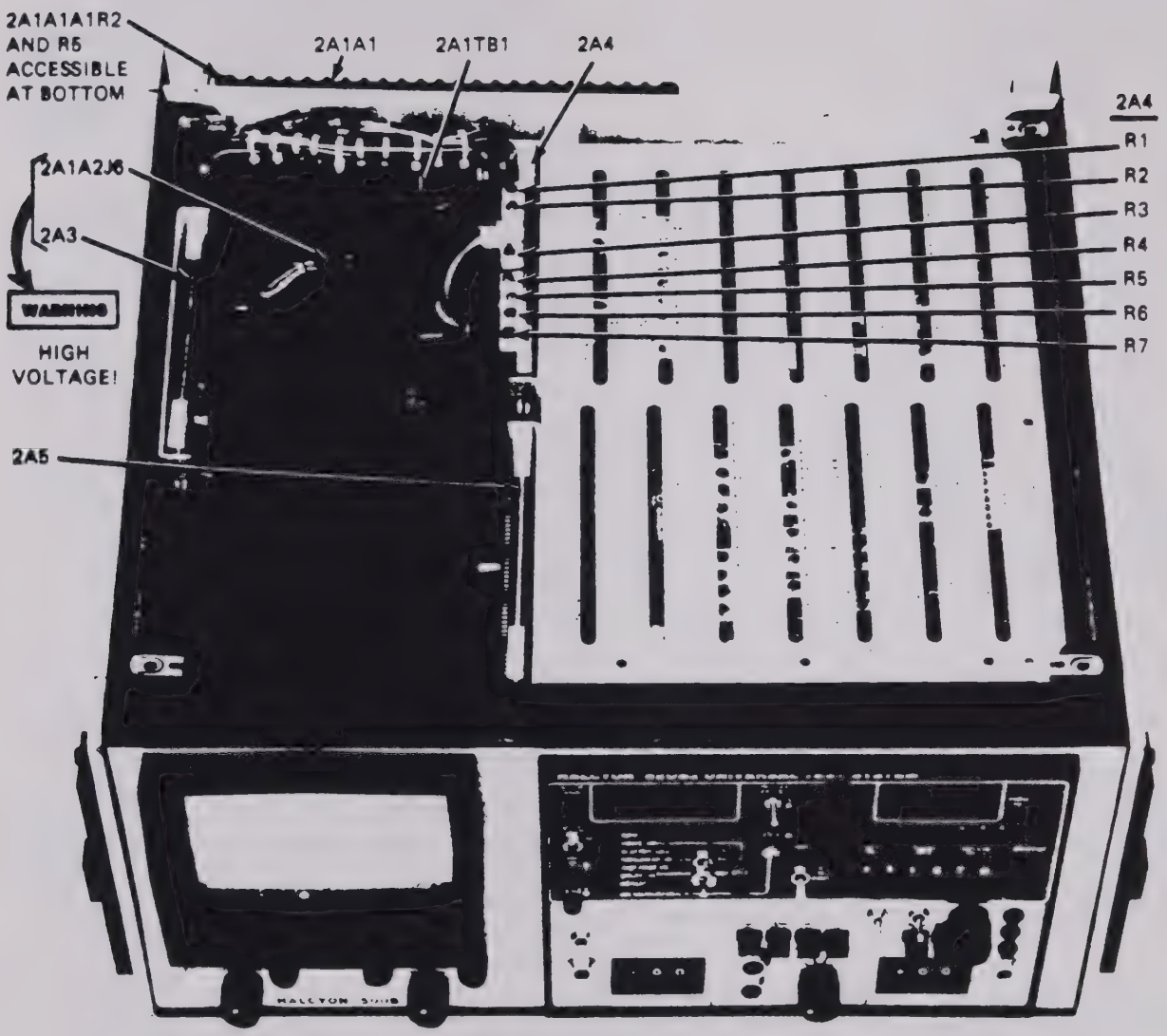

Figure 5-3. Model 520B2-07/17 with Top Cover Removed

The calibration procedures must be performed in the order presented. Inability to obtain correct results may be an indication of improper control settings or failure of the equipment. To be certain that the former can be eliminated, repeat any portion of the procedures which results in incorrect results before attempting to repair the equipment.

Certain procedures require elevating a circuit board by means of an extender board. Therefore before starting the calibration, withdraw the plug-in from the mainframe and remove the plug-in top cover. Then reinstall the plug-in. Except when the extender board is used, keep the cover over the plug-in circuit boards as an aid in identifying the various adjustment controls on the circuit boards.

Refer to paragraph 5-4a for an explanation of certain abbreviated instructions, used throughout the verification

procedures, which are also used in the following calibration procedures.

a. Initial Control Settings. Set controls as follows:

POWER	Out (off)
LEVEL IN	-00
NOISE/TLP CORRECTION	dBrn
DELAY DAMP	LO
STD/STD+LF	STD
DISPLAY OFFSET	CAL
LEVEL OUT	-00
TRANSMIT FUNCTION	NORM
MODE	INPUT
NORM/EXPD	NORM

NOTE

All other pushbutton switches should be in the OUT position.

b. Power Supply Check and Adjustment. Prior to calibrating any other portions of the 520B2-07/17, it is essential to determine that all power supply voltages are within the required tolerances and to adjust the +15 Vdc and -15 Vdc supplies, if necessary. Table 5-3 lists the voltages present in the equipment.

WARNING

Extremely dangerous voltages, capable of causing death or serious injury, are present on CRT Power Supply Circuit Card 2A3, edge connector 2A1A2J3, and crt socket 2A1A2J6; see figure 5-3. When working with the high voltages associated with the crt power supply, observe the following safety precautions.

(1) Know the equipment under test, and locate all high-voltage points before work is started.

(2) Do not work alone. Notify another person that you are making high-voltage tests.

(3) Work with one hand, and keep the other hand in your pocket.

(4) Don't depend on the insulation of a high-voltage wire for protection.

(5) Avoid contact between any part of the body and any object that might provide a ground.

(6) Remember that high voltage may appear at unexpected points in defective equipment.

(7) Remember that high voltages will discharge from point-to-point or from point-to-air. Keep hand closed on the handle of the high-voltage probe and in the clear, away from all high-voltage points.

(8) When using the probe, place it in such a manner that the guard ring will be closer to any high-voltage danger point than is the handle.

Table 5-3. DC Power Supply Voltage Data

Voltage, dc	Test point (fig. 5-3)	Adjustment (fig. 5-3)
+5±0.1	2A1TB1, terminal 5*	None
-15±0.01	2A1TB1, terminal 6*	2A1A1A1R5
+15±0.01	2A1TB1, terminal 7*	2A1A1A1R2
+200±40	2A1A2J3, pin J	None
-1250±200	2A1A2J3, pin Z	None
-1550±200	2A1A2J3, pin Y	None
-1750±250	2A1A2J3, pin R, T	None
-1800±250	2A1A2J3, pin P	None

*Terminal 1 is at left, terminal 10 is at right.

(9) Keep your hands, shoes, floor and test bench absolutely dry.

(10) Make sure the probe has no dirt, grit, or grease on its surface or handle.

c. Model 520B3 Plug-In Calibration.

(1) Depress POWER switch.

(2) Adjust R16 on 1A11 for -6.25 Vdc at E2 on 1A11.

(3) Adjust R119 on 1A11 for ±6.25 Vdc at E1 on 1A11.

(4) SELECT DELAY, uS mode and press RCV/XMT switch so that XMT indicator lights.

(5) TUNE transmitter frequency to 1000HKz.

(6) Elevate circuit card 1A10 by means of board extender.

(7) On that circuit card, temporarily ground pin 4 of IC21 and adjust R10 for ac null at pin Z of edge connector. Remove Ground from IC21.

(8) On 1A10, temporarily ground pin 9 of IC21 and adjust R11 for ac null at pin Z of edge connector. Leave ground on pin 9 of IC21.

(9) On 1A10, temporarily ground pin 4 of IC21 and adjust R12 for ac null at pin Z of edge connector.

(10) Remove both grounds from IC21 and reinstall in plug-in interconnect card.

(11) Elevate circuit card 1A11 by means of a board extender.

(12) SELECT AMP RESP, dB mode.

NOTE:
If your unit has a 1019-00PCB in the 1A11 slot go to the **ADDENDUM.** If your unit has a 0521-15PCB in slot 1A11 then continue to step 13 on this page. Most 520B3s have a 0521-15PCB.

(13) Connect multimeter leads between GND (TPI) and

P1-2	S/B +15±0.1V
P1-3	S/B -15±0.1V
P1-4	S/B +5±0.1V
(P1-5)	Adjust R7 +6.25 ±0.1V
(P1-6)	Adjust R7 -6.25 ±0.1V

(14) Set the transmit function set to the "NORM" position. Tune the frequency for 1000Hz. Connect the output of the 520B3 (with a 600 ohm termination) to the input of a distortion analyzer.

(15) Adjust R4, R5 and R6 (521-15PCB) for minimum distortion S/B -48dB or less. Check distortion at 300Hz and 3400Hz. It should be-48dB or less (If needed use R5 for 300Hz distortion and R6 for 3000Hz.)

(16) Press "CONT" button in. Tune the Frequency from 2kHz and up and watch for a "jump". Tune back after the jump. Adjust R3 (on 521-15PCB) for frequency reading of 2460Hz. Check if unit reads 2740±20Hz.

(17) Set CONT/SF back to CONT and SGL/AUTO/MAN switch to SGL. Adjust R1 on 521-15 for A high sweep limit of 3400Hz and R2 for a low sweep unit of 3400Hz.

(18) Disconnect distortion analyzer and reinstall circuit card in plug-in interconnect card.

(19) Terminate transmitter output with 600±1 ohm termination and connect digital voltmeter (DVM) across termination.

(20) TUNE transmitter frequency to 1000 Hz and set R4 on 1A2. Adjust R121 on 1A10 for DVM reading of 0.77460 Vac.

(21) SELECT NOISE, dB mode.

(22) Adjust R14 on 1A4 for a DVM reading of 0.77460.

(23) Set sweep rate control fully clockwise and check for a sweep rate of

approximately 1.5 seconds. **All sweep rate adjustments are done from the front panel.**

Steps 24 through 29 are omitted for the 520B3. Continue with step 30.

(30) Apply 1004±1 Hz tone from signal generator to receiver at level of 0.77460 Vac.

(31) Unblank last digit of left-hand display (13, figure 3-1) by changing switch S1 on circuit card 1A9 to its up position. (Circuit card must be removed to provide access to S1.)

(32) Adjust R11 on 1A1A1A4 to obtain -5.800 Vdc at TP2 on 1A2.

(33) Adjust R89 on 1A3 to obtain reading of 0.00 on left-hand display.

(34) Reduce signal generator output to 0.24495 Vac and adjust R46 on 1A4 for display of -10.00.

(35) Reduce signal generator output to 0.07746 Vac and adjust R91 on 1A3 for display of -20.00.

(36) Repeat steps (30), (33), (34), and (35) until calibration is achieved. Then restore S1 on circuit card 1A9 to original position, which will blank last digit of left-hand display.

(37) Disconnect signal generator and elevate circuit card 1A3 by means of board extender.

(38) SELECT NOISE, dBrn0 mode and adjust R124 on elevated card for dc null at pin 1 of IC20.

(39) Reinstall circuit card in plug-in interconnect card.

(40) Apply 1004±1 Hz tone to receiver at level of 0.77460 Vac. Set C-MSG/3 KHz switch to 3 KHz.

(41) Adjust R79 on 1A3 so that display (13, figure 3-1) just changes from 89 to 90 when S/N switch is pressed.

(42) Disconnect signal generator and reset C-MSG/3 KHz switch to C-MSG.

(43) Connect TRANSMIT to RECEIVE and SELECT Ø JITTER, DEG. mode. Adjust R1 on 1A5 for optimum SID pattern.

(44) Connect oscilloscope between TP2 on 1A5 and ground, and adjust R3 on 1A5 for waveform having 50-percent duty cycle. Disconnect oscilloscope.

(45) Apply 1200±1 Hz tone to receiver at level between 0.07657 and 0.07836 Vac.

(46) Loop transmitter to receiver and TUNE transmitter frequency to 1004 ±1 Hz.

(47) Adjust R8 on 1A5 for display reading of 11.5.

(48) Reduce signal generator output to between 0.02421 and 0.02479 Vac, and adjust R7 on 1A5 for display reading of 3.5.

(49) Disconnect signal generator and adjust R4 on 1A5 for display reading of 0.0±0.1.

(50) Repeat steps (45) through (49) until calibration is achieved. Reconnect signal generator to receiver after completing step (49) each time.

(51) Set STD/STD+LF switch to STD+LF, and adjust R5 on 1A5 for display reading of 0.0.

(52) Apply 994±1 Hz tone to receiver at level between 0.07657 and 0.07836 Vac.

(53) Adjust R2 on 1A5 for display reading of 10.9, then disconnect transmitter-to-receiver loop.

(54) Change signal generator frequency to 1000±1 Hz, set generator

level at 0.77460 Vac, and connect to receiver. SELECT REPEAT mode.

(55) Terminate transmitter output with 600±1 ohm termination. Adjust R44 on 1A2 to obtain 0.77460 Vac across termination.

(56) Reduce signal generator level to 0.07746 Vac. Adjust R50 on 1A2 to obtain 0.07746 Vac.

(57) Repeat steps (54) through (56) until calibration is achieved.

(58) SELECT NONLINEAR, dB mode and adjust R15 on 1A7 to obtain approximately -1 dBm across termination.

(59) Loop transmitter to receiver and SELECT Ø JITTER, DEG. mode.

(60) Set signal generator frequency to 1084±1 Hz and adjust level to obtain display reading of 30 degrees.

(61) SELECT HIT MEASUREMENTS mode and set PHASE threshold switches to 15. Set hit measurement to PHASE.

(62) Adjust R6 on 1A5 to that display just starts to register.

(63) Disconnect transmitter-to-receiver loop and SELECT AMP RESP, dB mode.

(64) Set signal generator frequency to 1000±1 Hz at level of 0.77460 Vac. Adjust R1 on 1A10 to obtain -1.00 Vdc at TP2 on 1A10.

(65) Change signal generator frequency to 3000±1 Hz, keeping output at 0.77460 Vac. Adjust R2 on 1A10 to obtain +1.00 Vdc at TP2 on 1A10.

(66) Repeat steps (64) and (65) until calibration is achieved.

(67) Disconnect signal generator and elevate circuit card 1A10, using board extender.

(68) On elevated card, jumper E1 to E2 and adjust R122 to obtain 0.000 Vdc at pin 7 of IC10; see figure 6-20. Remove jumper between E1 and E2.

(69) Apply 1000±1 Hz tone to receiver at level of 0.77460 Vac.

(70) On elevated card, adjust R7 to obtain 0.00 Vdc at pin 10 of IC10. There should be no change in crt display when NORM/EXPD switch is switched to EXPD. Reinstall circuit card in plug-in interconnect card.

(71) With NORM/EXPD switch set to EXPD, adjust R9 on 1A10 to obtain +1.00 Vdc at pin U of plug-in connector A1J2 (figure 6-27).

(72) Reduce signal generator output to 0.48874 Vac and adjust R8 on 1A10 to obtain -1.00 Vdc at pin U of A1J2. Disconnect signal generator.

(73) Loop transmitter to receiver through an equalizer. SELECT DELAY, uS mode. TUNE transmitter frequency to 1000±1 Hz.

(74) Press REF switch and, with displayed delay switching between +0 and -0, adjust R3 on 1A10 for no change in crt display.

(75) Adjust R5 on 1A10 to obtain -1.00 Vdc at TP1 on 1A10.

(76) Set equalizer for 900±10 uS delay and adjust R4 on 1A10 to obtain +2.00 Vdc at TP1 on 1A10.

(77) Depress 83 1/3 - 25 switch to 25 position. Press REF switch and, with displayed delay switching between +0 and -0, adjust R6 on 1A10 for no change in crt display. Disconnect equalizer, but keep transmitter looped to receiver.

(78) Be certain that S1 on interconnect circuit card (figure 6-11) is positioned toward the front panel (100.4 Hz position).

(79) Set S1-A on 1A13 to 3 and S1-B to 1, and SELECT NOISE, dBrn0 mode. Set NORM/EXPD switch to NORM.

(80) Make the following adjustments by means of controls on 1A14:

Control	Adjust for
R34	Vertically centered display
R23	Horizontally centered display
R37	Vertical amplitude from +2.5 to -12.5 dBm
R22	Horizontal amplitude from 0.5 to 3.5 KHz

(81) Check that SID crt display is aligned with SYNC control at midpoint. (If SYNC control is close to either end of range, a new value for C14 on Fade Out Circuit Card 1A14 may have to be selected.)

(82) Apply tone of approximately 1060 Hz. Set LEVEL IN switches to -20.

(83) Set R27 on 1A4 to midrange and adjust R25 on 1A4 to point at which 1004 Hz LOST indicator just goes off.

(84) TUNE transmitter frequency above and below 1000 Hz to verify that 1004 Hz LOST indicator is off over an approximately 150-Hz band, and lights outside that band.

NOTE

P/AR calibration, steps (85) through (88), is applicable only to Model 520B2-17.

(85) SELECT P/AR mode and set LEVEL IN switches to 00.

(86) Adjust R2 on 1A15 to obtain 5 Vp-p signal on oscilloscope connected across pins 5 and 7 of transformer T2 on Preamplifier and Mode Select Circuit Card 1A1A1A4 (see figures 5-1 and 6-8).

(87) Loop transmitter to receiver, and adjust R1 on 1A15 to obtain display indication of exactly 100.

(88) Change LEVEL OUT switch setting to -10 and then to -20; display should remain at 100.

d. Model 500B Mainframe Calibration.

(1) Verify that MODE switch is set to INPUT and NORM/EXPD switch is set to NORM. Press RCV/XMT switch so that XMT indicator lights.

(2) Apply a 4000 Hz tone to receiver at level between 0.76573 to 0.78357 Vac. TUNE transmitter frequency to 4000 Hz. Adjust AST, FOCUS, and INTENSITY controls for sharp, clear dot on crt.

NOTE

See figure 5-3 for locations of adjustment controls, referenced in the following procedures, on CRT Deflection Circuit Card 2A4.

(3) Adjust R6 to position crt dot on 4.0 KHz graticule line.

(4) Set CONT/LOCK switch to CONT and TUNE transmitter to its lowest frequency. Adjust R4 to position crt dot on 0.2 KHz graticule line.

(5) Set CONT/LOCK switch to LOCK and TUNE transmitter frequency to 2000 Hz. Adjust R2 to position crt dot on 2.0 KHz graticule line.

(6) TUNE transmitter frequency to 3000 Hz. Note position of crt dot relative to 3.0 KHz line on graticule. Adjust R1 to position dot an equal distance on opposite side of 3.0 KHz line.

(7) TUNE transmitter frequency to 2000 Hz. Adjust R2 to position crt dot on 2.0 KHz graticule line.

(8) Repeat steps (4) thru (7), as needed, to achieve calibration along crt horizontal axis.

(9) TUNE transmitter frequency to 1300 Hz. Adjust R7 to position crt dot at 0 dB graticule line.

(10) Reduce signal generator output to between 0.24215 and 0.24779 Vac. Adjust R5 to position crt dot at -10 dB graticule line.

(11) Repeat steps (9) and (10), as needed, to achieve calibration along crt vertical axis.

(12) Adjust R3 to align crt trace with graticule lines.

5-7. TROUBLESHOOTING.

a. General Troubleshooting Procedures. Because of the multifunction capabilities of the 520B2-07/17, troubleshooting is best accomplished by following a specific sequence of checks, rather than trying to analyze a fault which may manifest itself only in certain modes of operation. The procedures outlined herein provide a systematic sequence of checks and measurements which will enable the maintenance technician to isolate a fault to a defective component or circuit card.

b. Reference Information. Table 5-1 provides a list of test equipment which may be required when troubleshooting the equipment. Table 5-4 shows the relationship of all assemblies in the 520B2-07/17 and references the applicable

Table 5-4. Troubleshooting Reference Information

Ref desig	Assembly	Schematic (fig.)	Wire list (table)	Parts location (fig.)
1	Model 520B2 Plug-In Without P/AR	FO-1		6-2
1	Model 520B2 Plug-In With P/AR	FO-2		6-2
'A1	Enclosure		5-6	6-3
1A1A1	Front Panel		5-7	6-4
1A1A1A1	Front Panel Display Circuit Card	FO-3		6-5
1A1A1A2	Termination Circuit Card	FO-4		6-6
1A1A1A3	Integration Thumbwheel Circuit Card	FO-5		6-7
1A1A1A4	Preamplifier and Mode Select Circuit Card	FO-6		6-8
1A1A1A5	Vertical Interconnect Circuit Card		5-8	6-9
1A1A2	Rear Panel		5-9	6-10
1A1A3	Interconnect Circuit Card		5-10	6-11
1A2	Repeat and Transmit Function Circuit Card	FO-7		6-12
1A3	Noise Detector Circuit Card	FO-8		6-13
1A4	A/D Converter Circuit Card	FO-9		6-14
1A5	Phase Jitter Circuit Card	FO-10		6-15

Table 5-4. Troubleshooting Reference Information - Continued

Ref desig	Assembly	Schematic (fig.)	Wire list (table)	Parts location (fig.)
1A6	Phase AGC Circuit Card	FO-11		6-16
1A7	Nonlinear Distortion Circuit Card	FO-12		6-17
1A8	Data Accumulator Circuit Card	FO-13		6-18
1A9	Data and Display Control Circuit Card	FO-14		6-19
1A10	Modulator Circuit Card	FO-15		6-20
1A11	Sweep and VCO Circuit Card	FO-16		6-21
1A12	Integration and Hits Process Circuit Card	FO-17		6-22
1A13	Autoranging and TLP Circuit Card	FO-18		6-23
1A14	Fade Out Circuit Card	FO-19		6-24
1A15	Digital Event Buffers Circuit Card (Used on Model 520B2-07)	FO-20		6-25
1A15	P/AR Generator and Receiver Circuit Card (Used on Model 520B2-17)	FO-21		6-26
2	Model 500B Mainframe	FO-22	5-11	6-27
2A1	Rear Panel		5-12	6-28
2A1A1	Power Supply			6-29
2A1A1A1	Power Supply Circuit Card	FO-23		6-30
2A1A2	Wiring Harness		5-13	6-31
2A2	Enclosure			6-32
2A3	CRT Power Supply Circuit Card	FO-24		6-33
2A4	CRT Deflection Circuit Card	FO-25		6-34
2A5	Random Access Memory Circuit Card	FO-26		6-35

schematic diagram and/or wire list and the parts location illustration for each assembly.

c. Troubleshooting Sequence.

WARNING

Extremely dangerous voltages, capable of causing death or serious injury, are present in the equipment when the top or bottom cover is removed. Before proceeding, read and understand the safety procedures outlined in paragraph 5-6b.

(1) Power Supplies. If the equipment is not energized when the front-panel POWER switch is depressed (e.g., indicators and displays not lighted), check for obvious defects such as an open fuse, faulty power cord, or improper position of the rear-panel

voltage selection switch. Also be sure that the 520B2 Plug-In is seated properly in the 500B Mainframe by tightening the knurled nut on the rear panel of the Mainframe. If the trouble is not in the primary power circuit, check the various power supply voltages as described in paragraph 5-6b. If the fixed +5 Vdc supply is not within its specified tolerance, and/or the +15 or -15 Vdc supplies cannot be adjusted, replace Power Supply 2A1A1. If the higher voltages are not within the specified tolerances, replace CRT Power Supply Circuit Card 2A3. Note that the crt graticule lamps are powered from the +15 Vdc supply and that 2A3 is powered from the -15 Vdc supply.

(2) Performance Troubleshooting. If the power supply voltages are within their specified tolerances and the equipment does not function properly, it may be out of calibration. Therefore, the first step is to perform the calibration procedures detailed in paragraph 5-6. If calibration does not restore the equipment to an operational condition, troubleshoot it by following the performance verification procedures in paragraph 5-4 until an improper result is obtained. Then refer to the equivalent paragraph reference in table 5-5, which will specify the fault symptom, the probable cause of the malfunction, and the remedy to be taken. However, before replacing any part, examine the equipment carefully to be sure that the wiring to the part or to its connector (in the case of plug-in circuit cards) is not broken. When replacement of a circuit card is indicated, and such replacement does not remedy the fault, reinstall the original circuit card in the equipment.

5-8. SCHEMATIC DIAGRAMS AND WIRE LISTS. Schematic diagrams of the 520B2-07/17 appear in figures FO-1 through FO-26. Wire lists are included as tables 5-6 through 5-13.

Table 5-5. Troubleshooting

Ref para	Fault symptom	Probable cause	Remedy
5-4b(2)	No lamps or indicators lighted	1. Blown fuse	1. Replace 2A1F1
		2. Faulty power supply	2. See para 5-7c(1)
	No dot or trace on crt	1. Faulty HV power supply	1. Replace 2A3
		2. Faulty deflection circuit	2. Replace 1A10, 1A15, 2A4
		3. Faulty crt	3. Replace 2V1
		4. Faulty filament xfmr	4. Replace 2T1
5-4b(3)	Mode indicator LED not lighted	1. Faulty LED	1. Replace 1A1A1A1
		2. Ribbon cable not seated in connector	2. Check cable connectors on 1A1A1A1, 1A1A1A4, 1A1A1A5
	Mode indicator does not change to AMP RESP, dB	1. Faulty select circuit	1. Replace 1A1A1A4

Table 5-5. Troubleshooting — Continued

Ref para	Fault symptom	Probable cause	Remedy
5-4b(3) (Cont)		2. Faulty clock circuit	2. Replace 1A8
5-4b(4)	Transmit and receive indicators not lighted, or transmit indicator does not light	1. Faulty switch or LED	1. Replace 1A1A1A1
		2. Faulty select circuit	2. Replace 1A1A1A4
5-4b(5)	Transmitter frequency cannot be tuned	1. Faulty TUNE control	1. Replace 1A1A1R2
		2. Faulty VCO	2. Replace 1A11
		3. Faulty receiver section	3. Replace 1A3, 1A4
		4. Faulty counter circuit	4. Replace 1A8, 1A9
5-4b(7)	Output level(s) incorrect	1. Faulty LEVEL OUT switch	1. Replace 1A1A1S4
		2. Faulty VCO	2. Replace 1A11
		3. Faulty amplifier	3. Replace 1A2
		4. Faulty termination	4. Replace 1A1A1A2
		5. Faulty attenuator	5. Replace 1A1A1A4
5-4b(8)	Output level incorrect	Faulty delay circuit	Replace 1A10
5-4b(9)	Output level incorrect	1. Faulty 1004-Hz oscillator	1. Replace 1A5
		2. Faulty 1004-Hz amplifier	2. Replace 1A4
5-4b(11)	Display does not indicate 0.0±0.1 dB	1. Faulty receiver circuit	1. Replace 1A1A1A4, 1A3, 1A4, 1A8, 1A9
		2. Faulty termination	2. Replace 1A1A1A2
		3. Faulty level display circuit	3. Replace 1A1A1A1
5-4b(12)	Display does not change	Faulty DISPLAY OFFSET control	Replace 1A1A1A1
5-4b(13)	OUT OF RANGE LED does not light	1. Faulty out-of-range circuit	1. Replace 1A13
		2. Faulty LED	2. Replace 1A1A1A1

Table 5-5. Troubleshooting — Continued

Ref para	Fault symptom	Probable cause	Remedy
5-4b(13) (Cont)	Display not blanked when OUT OF RANGE LED is lighted	Faulty blanking circuit	Replace 1A8, 1A9
5-4b(14)	Display blanked when OUT OF RANGE LED is not lighted.	Faulty blanking circuit	Replace 1A8, 1A9
5-4b(15)	Display levels incorrect	1. Faulty attenuator	1. Replace 1A1A1A4
		2. Faulty digital circuit	2. Replace 1A8, 1A9
		3. Faulty termination	3. Replace 1A1A1A2
		4. Faulty receiver circuit	4. Replace 1A3, 1A4, 1A1A1A4
5-4b(16)	Display does not indicate -20±0.1 dBm	Faulty receiver circuit	Replace 1A3, 1A4, 1A1A1A4
5-4b(18)	Input level(s) incorrect	1. Faulty attenuator	1. Replace 1A1A1A4
		2. Faulty LEVEL IN switch	2. Replace 1A1A1S5
5-4b(19)	Frequency does not lock in 100.4-Hz steps	1. Faulty 1004-Hz clock	1. Replace 1A12
		2. Faulty CONT/LOCK switch	2. Replace 1A1A1S2
		3. Faulty lock circuit	3. Replace 1A11, 1A15
5-4b(20)	Frequency does not sweep, or does not sweep at correct rate	1. Faulty SWEEP RATE control	1. Replace 1A1A1R1
		2. Faulty SGL/AUTO/MAN switch	2. Replace 1A1A1S3
		3. Faulty sweep circuit	3. Replace 1A11
5-4b(21)	Frequency limits incorrect	1. Faulty sweep circuit	1. Replace 1A11
		2. Faulty SGL/AUTO/MAN switch	2. Replace 1A1A1S3
5-4b(23), 5-4b(24)	Distortion exceeds -40 dB	1. Faulty power supply	1. Replace 2A1A1
		2. Faulty reference voltage or VCO	2. Replace 1A11

Table 5-5. Troubleshooting — Continued

Ref para	Fault symptom	Probable cause	Remedy
5-4b(26)	Frequency display incorrect	1. Faulty receiver circuit	1. Replace 1A1A1A4, 1A3, 1A4, 1A6
		2. Faulty counter circuit	2. Replace 1A9
5-4b(29)	Noise exceeds 40 dBrn0	1. Faulty notch filter	1. Replace 1A3
		2. Faulty noise circuit	2. Replace 1A4
5-4b(30)	Display does not indicate 90±1 dBrn0	Faulty noise circuit	Replace 1A3
5-4b(31)	Display does not change in 1-dB steps	1. Faulty LEVEL OUT switch	1. Replace 1A1A1S4
		2. Faulty attenuator	2. Replace 1A1A1A4
5-4b(33)	Noise exceeds 40 dBrn0 at either or both frequencies	Faulty notch filter	Replace 1A4
5-4b(34)	Noise exceeds 40 dBrn0	1. Faulty notch filter	1. Replace 1A3
		2. Faulty noise circuit	2. Replace 1A4
	Display does not indicate 90±1 dBrn0	Faulty noise circuit	Replace 1A3
	Display does not change in 1-dB steps	1. Faulty LEVEL OUT switch	1. Replace 1A1A1S4
		2. Faulty attenuator	2. Replace 1A1A1A4
5-4b(35)	Display incorrect at one or more frequencies	Faulty C-message filter	Replace 1A3
5-4b(37)	Display does not indicate 89±1 dBrn	Faulty 3-kHz filter	Replace 1A3
5-4b(38)	Display does not indicate 76±1 dBrn	Faulty TLP circuit	Replace 1A13
5-4b(40)	1004 LED not lighted	Faulty indicator select circuit	Replace 1A13
5-4b(41)	Display indicates more than 0.3 degree	Faulty Ø jitter circuit	Replace 1A5

Table 5-5. Troubleshooting — Continued

Ref para	Fault symptom	Probable cause	Remedy
5-4b(44)	Display incorrect at one or more frequencies	Faulty Ø jitter circuit	Replace 1A5
5-4b(45)	Display incorrect at one or more frequencies	Faulty Ø jitter circuit	Replace 1A5
5-4b(47)	4 TONE P/AR LED not lighted	Faulty indicator select circuit	Replace 1A13
5-4b(48)	Output level incorrect	1. Faulty non-linear circuit	1. Replace 1A7
		2. Faulty amplifier circuit	2. Replace 1A2
5-4b(49)	Output level incorrect	Faulty non-linear circuit	Replace 1A7
5-4b(51) thru 5-4b(55)	Display incorrect	Faulty non-linear circuit or receiver buffer circuit	Replace 1A7
5-4b(58)	Display exceeds 2 us	1. Faulty 83-1/3 Hz modulator or delay circuit	1. Replace 1A8, 1A9, 1A10
		2. Faulty agc circuit	2. Replace 1A6
5-4b(59)	Display not within 10-us tolerance	Faulty delay circuit	Replace 1A10
5-4b(60)	Display exceeds 2 us	1. Faulty 25-Hz modulator or delay circuit	1. Replace 1A8, 1A9, 1A10
		2. Faulty agc circuit	2. Replace 1A6
5-4b(61)	Display changes less than 20 us	1. Faulty SYNC control	1. Replace 1A1A1A1
		2. Faulty 25-Hz modulator	2. Replace 1A8, 1A9, 1A10
5-4b(62)	Display changes less than 5 us	1. Faulty 83-1/3 Hz modulator	1. Replace 1A8, 1A9, 1A10
		2. Faulty agc circuit	2. Replace 1A6
5-4b(63)	Display not within 10-us tolerance	Faulty delay circuit	Replace 1A10

Table 5-5. Troubleshooting — Continued

Ref para	Fault symptom	Probable cause	Remedy
5-4b(65) thru 5-4b(67)	Output level(s) incorrect	Faulty repeat circuit	Replace 1A2
5-4b(68)	TIME LED not lighted	1. Faulty LED or START switch	1. Replace 1A1A1A1
		2. Faulty clear circuit	2. Replace 1A8
5-4b(69)	Display does not indicate zero	Faulty hits circuit	Replace 1A12
5-4b(73)	Display does not register phase hits	1. Faulty Ø jitter circuit	1. Replace 1A5
		2. Faulty hits counter circuit	2. Replace 1A8, 1A12
5-4b(74)	Display does not indicate zero at all settings	1. Faulty noise circuit	1. Replace 1A3
		2. Faulty hits counter circuit	2. Replace 1A8, 1A12
5-4b(75)	Oscilloscope does not display pulses	Faulty digital buffer circuit	Replace 1A15
5-4b(76)	Display does not indicate zero	Faulty Ø jitter circuit	Replace 1A5
5-4b(78)	Display does not indicate hits or oscilloscope does not display pulses	1. Faulty hits circuit	1. Replace 1A8, 1A12
		2. Faulty digital buffer circuit	2. Replace 1A15
		3. Faulty threshold circuit	3. Replace 1A1A1A3
5-4b(79)	Display indicates hits	Faulty hits priority circuit	Replace 1A12
5-4b(81), 5-4b(82)	Display does not indicate hits or oscilloscope does not display pulses	1. Faulty A/D converter circuit	1. Replace 1A4
		2. Faulty hits circuit	2. Replace 1A8, 1A12
		3. Faulty threshold circuit	3. Replace 1A1A1A3
		4. Faulty digital buffer circuit	4. Replace 1A15

Table 5-5. Troubleshooting — Continued

Ref para	Fault symptom	Probable cause	Remedy
5-4b(83)	Display indicates hits	1. Faulty threshold circuit	1. Replace 1A1A1A3
		2. Faulty hits circuit	2. Replace 1A8, 1A12
		3. Faulty A/D converter circuit	3. Replace 1A4
5-4b(87)	Display does not indicate hits or oscilloscope does not display pulses	1. Faulty threshold circuit	1. Replace 1A1A1A3
		2. Faulty noise circuit	2. Replace 1A3
		3. Faulty hits circuit	3. Replace 1A8, 1A12
5-4b(88)	Display indicates hits	1. Faulty threshold circuit	1. Replace 1A1A1A3
		2. Faulty hits circuit	2. Replace 1A8, 1A12
5-4b(89)	Display indicates hits	1. Faulty threshold circuit	1. Replace 1A1A1A3
		2. Faulty hits circuit	2. Replace 1A8, 1A12
		3. Faulty noise circuit	3. Replace 1A3
5-4b(90)	Display does not indicate hits and oscilloscope does not display pulses	1. Faulty threshold circuit	1. Replace 1A1A1A3
		2. Faulty hits circuit	2. Replace 1A8, 1A12
		3. Faulty noise circuit	3. Replace 1A3
5-4b(91)	Display indicates hits	1. Faulty threshold circuit	1. Replace 1A1A1A3
		2. Faulty hits circuit	2. Replace 1A8, 1A12
5-4b(92)	Display indicates hits	1. Faulty threshold circuit	1. Replace 1A1A1A3
		2. Faulty hits circuit	2. Replace 1A8, 1A12
		3. Faulty noise circuit	3. Replace 1A3
5-4b(93)	Oscilloscope does not display pulses as hits are indicated on display	Faulty digital buffer circuit	Replace 1A15

Table 5-5. Troubleshooting — Continued

Ref para	Fault symptom	Probable cause	Remedy
5-4b(94)	Display indicates hits	1. Faulty threshold circuit	1. Replace 1A1A1A3
		2. Faulty hits circuit	2. Replace 1A8, 1A12
		3. Faulty noise circuit	3. Replace 1A3
5-4b(97)	Audible tone absent or cannot be varied	1. Faulty audio circuit	1. Replace 1A2
		2. Faulty speaker	2. Replace 1A1A2LS1
		3. Faulty VOLUME control	3. Replace 1A1A2R1
5-4b(98)	Display does not indicate 0.0±0.2 dBm	Faulty termination	Replace 1A1A1A2
5-4b(99)	Display does not indicate -4.0±0.2 dBm	Faulty termination	Replace 1A1A1A2
5-4b(101)	No tone in handset	Faulty handset drive circuit	Replace 1A2
5-4b(102)	No voice sidetone in handset	Faulty microphone circuit	Replace 1A2, 1A4
5-4b(103)	Display exceeds 10 dBrn	Faulty noise circuit	Replace 1A3
5-4b(105)	Crt display incorrect	1. Faulty deflection circuit	1. Replace 1A1, 1A15, 2A4
		2. Faulty memory circuit	2. Replace 2A5
5-4b(106)	Voltage incorrect	Faulty 520B2 output	Replace 1A10, 1A15
5-4b(107)	Crt display incorrect	Faulty deflection circuit	Replace 1A10, 2A4
5-4b(108)	Voltage incorrect	Faulty 520B2 output	Replace 1A10, 1A15
5-4b(109)	Crt display incorrect	1. Faulty deflection circuit	1. Replace 1A10, 1A15, 2A4
		2. Faulty memory circuit	2. Replace 2A5

Table 5-5. Troubleshooting — Continued

Ref para	Fault symptom	Probable cause	Remedy
5-4b(110)	Voltage changes between NORM and EXPD switch positions	Faulty expand circuit	Replace 1A10
	Voltage incorrect	Faulty 520B2 output	Replace 1A10, 1A15
5-4b(111)	Crt display incorrect	Faulty deflection circuit	Replace 1A10, 1A15, 2A4
5-4b(112)	Voltage incorrect	Faulty 520B2 output	Replace 1A10, 1A15
5-4b(113)	Voltage incorrect	Faulty expand circuit	Replace 1A10
5-4b(114)	Crt display incorrect	Faulty deflection circuit	Replace 1A10, 2A4
5-4b(115)	Voltage incorrect	Faulty 520B2 output	Replace 1A10
5-4b(117)	Crt trace not at 0 us	Faulty delay circuit	Replace 1A10
5-4b(118)	Voltage incorrect or excessive bounce on crt display	Faulty delay or output circuit	Replace 1A10
5-4b(119)	Crt display incorrect	Faulty delay or deflection circuit	Replace 1A6, 1A10, 2A4
5-4b(120)	Voltage incorrect	Faulty 520B2 output	Replace 1A10, 1A15
5-4b(121)	Crt display not at 0 us	Faulty delay circuit	Replace 1A10
5-4b(122)	Voltage incorrect or excessive bounce on crt display	Faulty delay or output circuit	Replace 1A10
5-4b(123)	Voltage incorrect	Faulty 520B2 output	Replace 1A10
5-4b(125)	Display does not indicate 0.0±0.2 dBm	Faulty TRANSMIT FUNCTION switch	Replace 1A1A1S1
5-4b(126)	No skip band or skips at incorrect frequency	Faulty skip circuit	Replace 1A11
5-4b(128), 5-4b(129)	TIME LED does not stop flashing after 5 minutes	Faulty counter circuit	Replace 1A9, 1A12

Table 5-5. Troubleshooting — Continued

Ref para	Fault symptom	Probable cause	Remedy
5-4b(130)	TIME LED does not flash after 15 minutes	Faulty counter circuit	Replace 1A9, 1A12
5-4b(131)	SID pattern incorrect	Faulty fade-out circuit	Replace 1A14
5-4b(132)	SID pattern not adjustable in both directions	Faulty 1004-Hz oscillator	Replace 1A5
5-4b(133), 5-4b(134)	1004 Hz LOST LED not off or does not flash at proper frequencies	Faulty A/D converter	Replace 1A4
5-4b(135) (520B2-17 only)	Display incorrect at one or more LEVEL OUT switch settings	Faulty P/AR circuit	Replace 1A15
5-4b(136) (520B2-17 only)	Display does follow LEVEL OUT switch settings down to zero	Faulty P/AR circuit	Replace 1A15
5-4c(2)	No trace or dot on crt	1. Faulty HV power supply	1. Replace 2A3
		2. Faulty power supply	2. Replace 2A1A1
		3. Faulty crt	3. Replace 2V1
		4. Faulty deflection circuit	4. Replace 2A4, 2A5
		5. Faulty filament xfmr	5. Replace 2T1
	Crt dot at wrong position	1. Faulty 520B2 output	1. Replace 1A10, 1A15
		2. Faulty deflection circuit	2. Replace 2A4, 2A5
5-4c(3)	Crt dot does not move to -10 dB point	Faulty deflection circuit	Replace 2A4, 2A5
5-4c(4)	Voltage incorrect	1. Faulty 520B2 output	1. Replace 1A10, 1A15
		2. Faulty deflection circuit	2. Replace 2A4

Table 5-5. Troubleshooting — Continued

Ref para	Fault symptom	Probable cause	Remedy
5-4c(5)	Crt dot does not move to 3.0 KHz point	1. Faulty 520B2 output	1. Replace 1A10, 1A15
		2. Faulty deflection circuit	2. Replace 2A4
5-4c(6)	Voltage incorrect	1. Faulty 520B2 output	1. Replace 1A10, 1A15
		2. Faulty deflection circuit	2. Replace 2A4
5-4c(7)	Crt display incorrect	Faulty deflection circuit	Replace 2A4
5-4c(8)	Random dots on crt display	Faulty memory circuit	Replace 2A5
5-4c(9)	Crt trace broken or not smooth	1. Faulty memory circuit	1. Replace 2A5
		2. Faulty deflection circuit	2. Replace 2A4
5-4c(10)	Random dots on crt display	Faulty memory circuit	Replace 2A5
5-4c(11)	Data points on crt display change at frequencies not being scanned	Faulty memory circuit	Replace 2A5
5-4c(12)	Crt display incorrect	Faulty memory circuit	Replace 2A5
5-4c(13)	Crt display incorrect	Faulty memory circuit	Replace 2A5
5-4c(14)	Crt dot at -10 dB updates A&B memory data as signal generator is tuned	Faulty memory circuit	Replace 2A5
5-4c(15)	Crt line at 0 dB is updated as signal generator is tuned	Faulty memory circuit	Replace 2A5

Table 5-6. Enclosure Assembly 1A1 Wire List

WIRE			FROM		TO		FUNCTION
SIZE	COLOR	LENGTH	DESIGNATOR	PIN Nº	DESIGNATOR	PIN Nº	
			A2	J1	A3	P4	
			A1	J1	A3	P3	
			A1	J2	A3	P2	
			A1A3	J1	A4	P6	
			A1A2	J1	A4	P4	
			A1A1	P1	A4	P13	
			A1A1	P2	A4	P11	
			A1A1	P3	A4	P7	
			A1A1	P4	A4	P7	
			A1A1	P4	A4	P5	
			A1A4	J1	A4	P1	
			A1A4	J2	A4	P2	
			A1A4	J3	A4	P3	

Table 5-7. Front Panel Assembly 1A1A1 Wire List

SIGNAL NAME	FROM			TO		WIRE PART NO
	DESIGNATOR		PIN NO	DESIGNATOR	PIN NO	
	#21	[illegible]	3	[illegible]	2	24 AWG Red 21"
	#33	[illegible]	3	R2	1	24 AWG Red 6"
		[illegible]	2	R2	1	
DIG GND	#1	CR1	1	CR2	[illegible]	24 AWG V/Brn 3 1/2
DIG GND	#34	CR2	1	CR3	[illegible]	24 AWG Brn [illegible]
DIG GND	#26	CR3	1	[illegible]	[illegible]	24 AWG [illegible] Brn [illegible]
DIG GND	#9	CR1	1	S3	2	24 AWG [illegible] Brn [illegible]
DIG GND	#2	S3	2	S2B	2	24 AWG Brn 3 1/4
	#14	CR1	2	[illegible]	[illegible]	24 AWG Blk [illegible]
	#17	CR2	[illegible]	[illegible]	12	24 AWG Red 18
	#[illegible]	[illegible]	[illegible]		[illegible]	24 AWG [illegible] 18 [illegible]
	#22	S3	[illegible]	[illegible]	[illegible]	24 AWG [illegible]
	#28	[illegible]	1	[illegible]	[illegible]	24 AWG [illegible]
SWRAT	#19	R1	[illegible]	[illegible]	9	24 AWG [illegible] Gry 16 [illegible]
	#23	R1	3	[illegible]	8	24 AWG Gry 16

SIGNAL NAME	FROM			TO		WIRE PART NO
	DESIGNATOR		PIN NO	DESIGNATOR	PIN NO	
	#24	R2	2	J2	5	24 AWG Grn 17"
	#20	R2	3	J2	3	24 AWG Org 17 1/2"
	#27	S2A	3	J2	4	24 AWG Yel 23"
	#25	S2A	5	J2	10	24 AWG Blk 18 1/2"
	#15	S2B	4	J1	9	24 AWG Vio/Gry 20"
XJKTIP		S1J	4	S1G	5	Insulated Bus Wire
XJKTIP		S1G	5	S1G	6	Bus Wire
XJKTIP		S1G	6	S1E	14	Insulated Bus Wire
XJKTIP	#11	S1E	14	J4	2	24 AWG Org 7"
					Twisted Pair	
XJKRNG	#37	S1F	13	J4	1	24 AWG Gry 7"
XJKRNG		S1K	10	S1H	11	Insulated Bus Wire
XJKRNG		S1H	11	S1H	12	Bus Wire
XJKRNG		S1H	12	S1F	13	Insulated Bus Wire

Table 5-7. Front Panel Assembly 1A1A1 Wire List — Continued

SIGNAL NAME	FROM		TO		WIRE PART NO
	DESIGNATOR	PIN NO	DESIGNATOR	PIN NO	
XJKTIP	#38 J4	2	J1	1	24 AWG Org 18 1/2"
XJKRNG	#39 J4	1	J1	2	24 AWG Gry 18 1/2"
				Twisted Pair	
RJKTIP	#29 J5	2	S1C	14	24 AWG Red 8"
RJKRNG	#30 J5	1	S1D	13	24 AWG Grn 8"
				Twisted Pair	
RJKTIP	#18 S1C	14	J1	3	24 AWG Red 22"
RJKRNG	#35 S1D	13	J1	4	24 AWG Grn 22
				Twisted Pair	
	#32 J6	1	S1K	13	24 AWG Wht/Brn 5 1/2"
	#7 J6	2	S1J	14	24 AWG W/Blk 6 1/2"
MICRCV	#13 S1J	1	J1	7	24 AWG Vio 21"
HDSDRV	#40 S1K	7	J1	8	24 AWG Wht/Grv 20"
Hold 2	#36 S1H	13	J3	2	24 AWG Wht/Red 11 1/2"
Hold 1	#8 S1C	14	J3	1	24 AWG Wht/Brn 9"
$\overline{\text{TALK}}$	S1A	1	S1A	2	Bus Wire
$\overline{\text{TALK}}$	S1A	2	S1A	4	Insulated Bus Wire
$\overline{\text{TALK}}$	#10 S1A	4	J1	6	24 AWG Blu 21"

SIGNAL NAME	FROM		TO		WIRE PART NO
	DESIGNATOR	PIN NO	DESIGNATOR	PIN NO	
SIG GND	#16 S1A	14	J1	13	24 AWG Wht/Org 19"
SIG GND	J7	2	J7	3	Bus Wire
XMT GND	#3 J7	3	J4	3	24 AWG Vio/Red 7"
RCVTIP	S1C	1	S1C	2	Bus Wire
RCVTIP	S1C	2	S1C	3	Bus Wire
RCVTIP	S1C	3	S1C	4	Bus Wire
RCVTIP	S1C	4	S1C	5	Bus Wire
RCVTIP	#4 S1C	5	J8	4	24 AWG Yel 12 1/2"
RCVRNG	#3 S1D	7	J8	3	24 AWG Wht/Yel 12 1/2"
				Twisted Pair	
RCVRNG	S1D	7	S1D	8	Bus Wire
RCVRNG	S1D	8	S1D	9	Bus Wire
RCVRNG	S1D	9	S1D	10	Bus Wire
RCVRNG	S1D	10	S1D	11	Bus Wire
RCVRNG	S1D	11	S1E	12	Insulated Bus Wire
RCVTIP	S1C	5	S1E	6	Insulated Bus Wire
XMT TIP	S1C	6	S1E	5	Insulated Bus Wire
XMT TIP	S1E	5	S1E	3	Insulated Bus Wire
XMT TIP	S1E	3	S1E	1	Insulated Bus Wire

Table 5-7. Front Panel Assembly 1A1A1 Wire List -- Continued

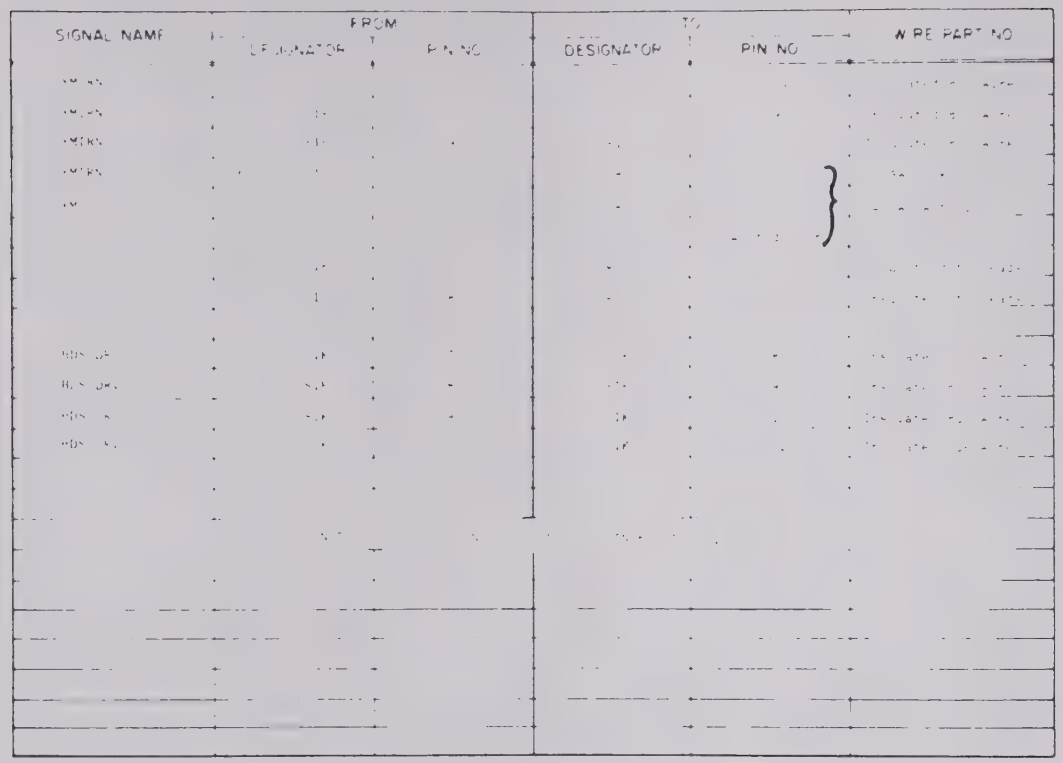

Table 5-8. Vertical Interconnect Circuit Card 1A1A1A5 Wire List

WIRE			FROM		TO		FUNCTION
SIZE	COLOR	LENGTH	DESIGNATOR	PIN Nº	DESIGNATOR	PIN Nº	
			P1	1	P4	5	
			P4	5	P14	112	
			P1	2	P14	59	
			P1	3	P4	12	
			P4	12	P14	125	
			P1	4	P14	61	
			P1	4	P4	1	
			P1	5	P12	10	-15 VDC
			P12	10	P14	38	
			P1	6	P12	14	+15 VDC
			P12	14	P14	32	
			P1	7	P4	13	
			P1	8	P14	57	
			P1	9	P4	2	
			P1	10	P4	16	
			P1	11	P4	15	
			P1	12	P14	55	
			P1	13	P14	53	
			P1	14	P4	14	ANALOG GRD
			P1	14	P14	1	

Table 5-8. Vertical Interconnect Circuit Card 1A1A1A5 Wire List — Continued

WIRE			FROM		TO		FUNCTION
SIZE	COLOR	LENGTH	DESIGNATOR	PIN Nº	DESIGNATOR	PIN Nº	
			P2	1	P4	7	
			P4	7	P14	110	
			P2	2	P14	121	
			P2	3	P14	123	
			4	N.C.			P2
			P2	5	P14	133	
			P2	6	N.C.		
			P2	7	N.C.		
			P2	8	P11	9	
			P2	9	P14	119	
			P2	10	P14	115	
			P2	11	P14	107	
			P2	12	N.C.		
			P2	13	P14	105	
			P2	14	P14	85	
			P3	1	P10	16	
			P10	16	P14	35	
			P3	9	P9	7	+5 VDC
			P9	7	P4	8	

Table 5-8. Vertical Interconnect Circuit Card 1A1A1A5 Wire List — Continued

WIRE			FROM		TO		FUNCTION
SIZE	COLOR	LENGTH	DESIGNATOR	PIN Nº	DESIGNATOR	PIN Nº	
			P3	9	P8	1	
			P13	14	P14	54	
			P3	10	P14	117	
			P3	11	P10	12	
			P3	12	P10	15	
			P10	15	P14	37	
			P3	13	P10	14	
			P10	14	P14	39	
			P3	14	N.C.		
			P4	3	P14	137	
			P4	4	P14	135	
			P3	2	P10	9	
			P10	9	P14	47	
			P3	3	P10	1	
			P10	1	P14	27	
			P3	4	P10	2	
			P10	2	P14	29	
			P3	5	P14	131	
			P3	6	P10	10	
			P10	10	P14	45	
			P3	7	P10	13	

Table 5-8. Vertical Interconnect Circuit Card 1A1A1A5 Wire List — Continued

WIRE			FROM		TO		FUNCTION
SIZE	COLOR	LENGTH	DESIGNATOR	PIN Nº	DESIGNATOR	PIN Nº	
			P10	13	P14	41	
			P3	8	P4	6	DIGITAL GRD
			P3	8	P8	2	
			P8	2	P9	1	
			P9	1	P10	8	
			P9	1	P14	109	
			P5	9	P14	134	
			P5	10	P14	130	
			P5	11	P14	126	(SPARE)
			P5	12	P14	122	
			P5	13	P14	118	
			P5	14	P14	114	
			P6	1	P14	5	
			P6	2	P14	7	
			P6	3	P14	9	
			P6	4	P12	11	
			P6	4	P14	36	
			P6	5	P14	3	
			P4	9	P9	10	
			P9	10	P14	100	

Table 5-8. Vertical Interconnect Circuit Card 1A1A1A5 Wire List — Continued

WIRE			FROM		TO		FUNCTION
SIZE	COLOR	LENGTH	DESIGNATOR	PIN Nº	DESIGNATOR	PIN Nº	
			P4	10	P14	129	
			P4	11	P14	127	
			P5	1	P14	116	
			P5	2	P14	120	
			P5	3	P14	124	
			P5	4	P14	128	
			P5	5	P14	139	
			P5	6	P14	136	
			P5	7	P14	140	
			P5	8	P14	138	
			P6	6	P14	49	
			P6	7	P14	51	
			P6	8	P14	19	
			P6	9	P14	17	(SPARE)
			P6	10	N.C.		
			P6	11	P14	15	
			P6	12	P12	1	
			P12	1	P14	80	

Table 5-8. Vertical Interconnect Circuit Card 1A1A1A5 Wire List — Continued

WIRE			FROM		TO		FUNCTION
SIZE	COLOR	LENGTH	DESIGNATOR	PIN Nº	DESIGNATOR	PIN Nº	
			P6	13	P14	13	
			P6	14	P14	11	
			P7	1	P14	71	
			P7	2	P14	73	
			P7	3	P14	83	
			P7	4	P14	81	
			P7	5	P14	75	
			P7	6	P14	79	
			P7	7	P7	14	INSULATED JUMPER
			P7	7	P14	77	
			P7	8	P14	69	
			P7	9	P14	67	
			P7	10	P14	65	
			P7	11	P14	63	
			P7	12	N.C.		
			P7	13	N.C.		
			P7	7	P7	14	
			P8	13	P14	89	

Table 5-8. Vertical Interconnect Circuit Card 1A1A1A5 Wire List — Continued

WIRE			FROM		TO		FUNCTION
SIZE	COLOR	LENGTH	DESIGNATOR	PIN Nº	DESIGNATOR	PIN Nº	
			P8	14	P14	87	(SPARE)
			P9	2	P12	7	
			P12	7	P14	86	
			P9	3	P14	106	
			P9	4	P14	108	(SPARE)
			P9	5	P14	111	
			P9	6	P14	113	
			P9	8	P14	102	
			P9	9	P14	104	
			P9	11	P14	98	
			P9	12	P14	96	
			P7	14	N.C.		
			P8	3	P14	95	
			P8	4	P14	97	
			P8	5	P14	99	
			P8	6	P14	103	
			P8	7	P14	101	
			P8	8	P14	93	(SPARE)

Table 5-8. Vertical Interconnect Circuit Card 1A1A1A5 Wire List — Continued

WIRE			FROM		TO		FUNCTION
SIZE	COLOR	LENGTH	DESIGNATOR	PIN Nº	DESIGNATOR	PIN Nº	
			P8	9	N.C.		
			P8	10	N.C.		
			P8	11	N.C.		
			P8	12	P14	91	
			P11	4	P14	16	
			P11	5	P14	20	
			P11	6	P14	24	
			P11	7	P14	28	
			P11	8	P14	30	
			P11	10	P14	26	
			P11	11	P14	22	
			P11	12	P14	18	
			P11	13	P14	14	
			P11	14	P14	10	
			P11	15	P14	6	
			P9	13	P14	94	
			P9	14	P14	92	

Table 5-8. Vertical Interconnect Circuit Card 1A1A1A5 Wire List — Continued

WIRE			FROM		TO		FUNCTION
SIZE	COLOR	LENGTH	DESIGNATOR	PIN Nº	DESIGNATOR	PIN Nº	
			P10	3	P14	31	
			P10	4	P14	33	
			P10	5	P14	25	
			P10	6	P14	23	
			P10	7	P14	21	
			P10	11	P14	43	
			P11	1	P14	4	
			P11	2	P14	8	
			P11	3	P14	12	
			P13	2	P14	56	(SPARE)
			P13	3	P14	60	
			P13	4	P14	64	
			P13	5	P14	68	
			P13	6	P14	72	
			P13	7	P14	76	
			P13	8	P14	78	(SPARE)
			P13	9	P14	74	(SPARE)

Table 5-8. Vertical Interconnect Circuit Card 1A1A1A5 Wire List — Continued

WIRE			FROM		TO		FUNCTION
SIZE	COLOR	LENGTH	DESIGNATOR	PIN Nº	DESIGNATOR	PIN Nº	
			P13	10	P14	70	(SPARE)
			P13	11	P14	66	
			P13	12	P14	62	
			P11	16	P14	2	
			P12	2	P14	82	
			P12	3	N.C.		
			P12	4	P14	90	
			P12	5	P14	88	
			P12	6	P14	84	
			P12	8	P14	42	(SPARE)
			P12	9	P14	40	
			P12	12	N.C.		
			P12	13	P14	34	(SPARE)
			P13	1	P14	44	
			P13	13	P14	58	
			P2	4	P13	13	Insulated Jumper
			P2	12	P13	1	" "
			P2	7	P7	13	" "
			P8	14	P11	9	" "
			P13	3	P3	11	Insulated Jumper

Table 5-9. Rear Panel Assembly 1A1A2 Wire List

SIGNAL NAME	FROM		TO		WIRE PART NO
	DESIGNATOR	PIN NO	DESIGNATOR	PIN NO	
RJKTIP	J2	Solder Lug	J7	3	24 AWG Org 15
RJKRNG	J3	Solder Lug	J7	4	24 AWG Red 15
				Twisted Pair	
XJKRNG	J4	Solder Lug	J7	2	24 AWG Brn 15
XJKTIP	J5	Solder Lug	J7	1	24 AWG Blk 15
				Twisted Pair	
$\overline{\text{GHTCNT}}$	J6	1	J1	5	24 AWG Grn 6"
$\overline{\text{ØHTCNT}}$	J6	2	J1	9	24 AWG Wht 6"
$\overline{\text{IMPCNT}}$	J6	3	J1	8	24 AWG Gry 6"
$\overline{\text{IH+4CT}}$	J6	4	J1	10	24 AWG Blk 6"
$\overline{\text{IH+8CT}}$	J6	5	J1	6	24 AWG Blu 6"
$\overline{\text{DOCNT}}$	J6	6	J1	7	24 AWG Vio 6"
ØJANLG	J6	10	J1	13	24 AWG Org 6"
CKT GND	J6	12	J1	15	24 AWG Grn 3 1/2"
YBUFF	J6	13	J1	11	24 AWG Brn 6"
XBUFF	J6	14	J1	12	24 AWG Red 6"
DIG GND	J6	24	S1	1	24 AWG Yel 3"
DIG GND	S1	1	J1	14	24 AWG Yel 9 3/4"
$\overline{\text{NORM}}$	S1	2	J1	3	24 AWG Org 9 3/4"
SPKVOL	R1	1	J1	1	24 AWG Brn 9 3/4"
CKT GND	R1	3	J1	15	24 AWG Grn 9 3/4"
ARNGIN	R1	2	J1	4	24 AWG Yel 9 3/4"

SIGNAL NAME	FROM		TO		WIRE PART NO
	DESIGNATOR	PIN NO	DESIGNATOR	PIN NO	
CKT GND	R1	3	LS1	1	24 AWG Grn 3"
SPKDRV	LS1	2	J1	2	24 AWG Red 9 3/4"

Table 5-10. Interconnect Circuit Card 1A1A3 Wire List

SIGNAL NAME	FROM		TO		WIRE PART NO
	DESIGNATOR	PIN NO	DESIGNATOR	PIN NO	
XMT SEL	J15	55	J8	19	
PRA OUT	J15	53	J6	P	
LEV MOD	J15	121	J12	U	
CK10HZ	J15	115	J12	X	
GATE CT	J15	119	J9	14	
GATE CT	J9	14	J10	14	
RCV OUT	1	12	J13	N	
RCV OUT				F	
BUF OUT	J15	59	J8	7	
BUF OUT	J2		J1	11	
BUF OUT	J1	11	J1	U	
BUF OUT	J1	U	J6	Y	

SIGNAL NAME	FROM		TO		WIRE PART NO
	DESIGNATOR	PIN NO	DESIGNATOR	PIN NO	
XMT DRV	J15	57	J6	J	
HORZ	J1		P1	X	
VERT	J1	N	P1	V	
CK100.4	J14	11	S1	-	
$\overline{\text{NON LIN}}$	J15	27	J15	70	
$\overline{\text{NON LIN}}$	J15	70	J14	18	
$\overline{\text{NON LIN}}$	J14	18	J11	19	
$\overline{\text{ø JITTR}}$	J15	47	J15	76	
$\overline{\text{ø JITTR}}$	J15	76	J14	Y	
$\overline{\text{NOISE}}$	J15	45	J15	72	
$\overline{\text{NOISE}}$	J15	72	J12	H	
$\overline{\text{NOISE}}$	J12	H	J11	T	
$\overline{\text{LEVEL}}$	J15	35	J15	74	
$\overline{\text{LEVEL}}$	J15	74	J12	11	
RCVSPC	J13	Y	J14	10	

Table 5-10. Interconnect Circuit Card 1A1A3 Wire List — Continued

SIGNAL NAME	FROM		TO		WIRE PART NO
	DESIGNATOR	PIN NO	DESIGNATOR	PIN NO	
$\overline{\text{DELAY}}$	J15	37	J15	8	
$\overline{\text{DELAY}}$	J15	8	J11	S	
$\overline{\text{DELAY}}$	J11	S	J3	U	
$\overline{\text{DELAY}}$	J3	U	J10	13	
$\overline{\text{DELAY}}$	J10	13	J3	S	
$\overline{\text{DELAY}}$	J3	S	J12	14	
$\overline{\text{REPEAT}}$	J15	39	J15	4	
$\overline{\text{REPEAT}}$	J15	4	J3	X	
$\overline{\text{REPEAT}}$	J3	X	J12	12	
$\overline{\text{INTMES}}$	J15	41	J15	78	
$\overline{\text{INTMES}}$	J15	78	J11	15	
$\overline{\text{INTMES}}$	J11	15	J10	W	
$\overline{\text{INTMES}}$	J10	W	J12	K	
$\overline{\text{INTMES}}$	J12	K	J13	13	
$\overline{\text{SLCNCH}}$	J15	131	J13	21	
$\overline{\text{SLCMSG}}$	J15	133	J13	T	
$\overline{\text{SL3KHZ}}$	J15	123	J13	U	

SIGNAL NAME	FROM		TO		WIRE PART NO
	DESIGNATOR	PIN NO	DESIGNATOR	PIN NO	
$\overline{\text{LINSIG}}$	J11	17	J14	Z	
$\overline{\text{LEVMOD}}$	J12	V	J13	M	
$\overline{\text{LEVMOD}}$	J13	M	J13	20	
$\overline{\text{LEVMOD}}$	J13	20	J13	14	
$\overline{\text{MIPLED}}$	J15	87	J15	60	
$\overline{\text{MIPLED}}$	J15	60	J9	J	
NORSWP	J15	100	J4	L	
SKPSWP	J15	127	J4	N	
VCOSWP	J15	129	J4	11	
HARMLV	J14	K	J7	7	
ATTRCV	J13	W	J12	18	
ARRGOT	J13	Z	J12	Y	
ARRGOT	J12	Y	J14	5	
MGTRCV	J13	V	J12	10	

Table 5-10. Interconnect Circuit Card 1A1A3 Wire List — Continued

SIGNAL NAME	FROM		TO		WIRE PART NO
	DESIGNATOR	PIN NO	DESIGNATOR	PIN NO	
ARNGIN	J13	Z	J12	Z	
ARNGIN	J12	[illegible]	J6	R	
ARNGIN	J6	R	[illegible]	[illegible]	
ARNGIN	P4	[illegible]	[illegible]	H	
IMPNOS	J8	[illegible]	J9	[illegible]	
IMPULS	J13	[illegible]	[illegible]	R	
SIGMES	J13	K	J5	H	
SIGMES	J8	H	J12	17	
UNORNO	J13	[illegible]	[illegible]	21	
OVRRN	J13	[illegible]	J12	20	
ACCOUT	[illegible]	[illegible]	J5	Z	
ACCOUT	[illegible]	[illegible]	J8	[illegible]	
ACCOUT	J2	[illegible]	[illegible]	[illegible]	
ZCD83	J2	[illegible]	J11		
ENVDET	J2	H	J3	[illegible]	

SIGNAL NAME	FROM		TO		WIRE PART NO
	DESIGNATOR	PIN NO	DESIGNATOR	PIN NO	
REMOD	J6	[illegible]	J3	[illegible]	
SIGLEV	J6	X	J8	20	
LINLEV	J6	[illegible]	J3	14	
SYNCDC	J5	[illegible]	J10	7	
SYNCDC	J10	7	J15	81	
ØHTREF	J15	51	J5	K	
ØJITTR	J5	L	J8	E	
ØHIT	J5	M	J9	L	
PPLVCO	J5	W	J1	13	
IMHZ	J14	W	J10	5	
VRTD/A	J1	T	P1	18	
AGC 20	J11	6	J12	15	

Table 5-10. Interconnect Circuit Card 1A1A3 Wire List — Continued

SIGNAL NAME	FROM		TO		WIRE PART NO
	DESIGNATOR	PIN NO	DESIGNATOR	PIN NO	
HRZD/A	J1	[illegible]	P1	20	
AGC 40	J11	7	J12	29	
JITWND	J14	20	J8	[illegible]	
$\overline{2SDTIM}$	J15	6	J11	[illegible]	
$\overline{2SDTIM}$	J11	[illegible]	J13	[illegible]	
$\overline{LSDTIM}$	J15	2	J11	[illegible]	
$\overline{LSDTIM}$	J11	[illegible]	J13	K	
OUTRNG	J11	X	J12	22	
LINWND	J11	16	J14	X	
MODREF	J11	13	J10	10	
ZCD25	J11	M	J3	L	
$\overline{SEL83}$	J11	N	J10	16	
$\overline{SEL83}$	J10	16	J3	V	
$\overline{SEL83}$	J3	V	P3	9	

SIGNAL NAME	FROM		TO		WIRE PART NO
	DESIGNATOR	PIN NO	DESIGNATOR	PIN NO	
$\overline{MSDTIM}$	J15	79	J10	E	
LS 1004	J15	107	J8	7	
LS 1004	J15	107	J5	22	
$\overline{3SDTIM}$	J15	83	J10	F	
$\overline{TSTCLR}$	J11	14	J13	7	
$\overline{TSTCLR}$	J13	7	J10	H	
$\overline{TSTCLR}$	J10	H	J7	Z	
$\overline{TSTCLR}$	J7	Z	J15	124	
$\overline{TSTCLR}$	J15	124	J9	K	
CRNSCY	J11	E	J10	12	
LOGWND	J11	12	J8	K	
$\overline{TONEOT}$	J1	10	J8	22	
$\overline{P/AR}$	J15	29	J15	68	
$\overline{R/AR}$	J15	68	J14	22	
FRQ	J11	8	J8	N	

Table 5-10. Interconnect Circuit Card 1A1A3 Wire List — Continued

SIGNAL NAME	FROM		TO		WIRE PART NO
	DESIGNATOR	PIN NO	DESIGNATOR	PIN NO	
RRQ	[illegible]	[illegible]	[illegible]	[illegible]	
CK100	[illegible]	[illegible]	[illegible]	[illegible]	
CK10C	[illegible]	[illegible]	[illegible]	[illegible]	
CK10C	[illegible]	[illegible]	[illegible]	[illegible]	
MAGDMP	[illegible]	[illegible]	[illegible]	[illegible]	
$\overline{\text{BLANK}}$	[illegible]	20	[illegible]	[illegible]	
$\overline{\text{POSSGN}}$		66	[illegible]	[illegible]	
$\overline{\text{POSLSC}}$	[illegible]	[illegible]	[illegible]	[illegible]	
$\overline{\text{POSLSC}}$	[illegible]	[illegible]	[illegible]	[illegible]	
[illegible]	[illegible]	[illegible]	[illegible]	[illegible]	
$\overline{\text{DEFPNT}}$	[illegible]	[illegible]	[illegible]	[illegible]	
[illegible]	[illegible]	[illegible]	[illegible]	[illegible]	
DEFPHA	[illegible]	[illegible]	[illegible]	S	

SIGNAL NAME	FROM		TO		WIRE PART NO
	DESIGNATOR	PIN NO	DESIGNATOR	PIN NO	
$\overline{\text{CPLXSG}}$	J11	21	J13	X	
$\overline{\text{CPLXSG}}$	J13	[illegible]	J14	19	
$\overline{\text{CPLXSG}}$	J14	19	J8	6	
$\overline{\text{CPLXSG}}$	J8	8	J12	P	
$\overline{\text{TIMXFR}}$	J11	F	J10	7	
$\overline{\text{TIMCLR}}$	J11	J	J10	Y	
ENDMES	J11	18	J8	F	
ENDMES	J8	F	J14	E	
$\overline{\text{FRQXFR}}$	J15	116	J11	9	
$\overline{\text{FRQCLR}}$	J15	120	J11	H	
$\overline{\text{FRQCNT}}$	J15	128	J11	Z	
$\overline{\text{DAMP}}$	J15	56	J10	15	
$\overline{\text{DAMP}}$	J10	15	J11	11	
$\overline{\text{STPINT}}$	J15	69	J10	8	

Table 5-10. Interconnect Circuit Card 1A1A3 Wire List — Continued

SIGNAL NAME	FROM		TO		WIRE PART NO.
	DESIGNATOR	PIN NO	DESIGNATOR	PIN NO.	
$\overline{\text{DOCNT}}$	J14	12	P4	7	
DOCNT	J10	V	J9	Y	
DOCNT	J9	Y	J14	13	
$\overline{\text{IH+8CT}}$	J14	14	P4	6	
IH+8CT	J10	U	J9	13	
IH+8CT	J9	13	J14	15	
IH+4CT	J10	T	J9	M	
IH+4CT	J9	M	J14	16	
$\overline{\text{IH+4CT}}$	J14	17	P4	10	
IMPCNT	J10	R	J9	X	
IMPCNT	J9	X	J14	M	
$\overline{\text{IMPCNT}}$	P4	8	J14	L	
ØHTCNT	J10	P	J9	W	
ØHTCNT	J9	W	J14	N	

SIGNAL NAME	FROM		TO		WIRE PART NO
	DESIGNATOR	PIN NO	DESIGNATOR	PIN NO	
$\overline{\text{ØHTCNT}}$	J14	P	P4	9	
ØHTCNT	J10	H	J9	V	
ØHTCNT	J9	V	J14	R	
$\overline{\text{ØHTCNT}}$	J14	S	P4	5	
MINCNT	J10	L	J9	U	
ABIT	J15	24	J10	22	
(VIA)	E13	-	E14	-	24 AWG wht 8"
BBIT	J15	12	J10	21	
(VIA)	E9	-	E10	-	24 AWG wht 8"
CBIT	J15	16	J10	20	
(VIA)	E11	-	E12	-	24 AWG wht 8"
DBIT	J15	28	J10	19	
(VIA)	E15	-	E16	-	24 AWG wht 8"
PARA	J10	X	J9	21	

Table 5-10. Interconnect Circuit Card 1A1A3 Wire List — Continued

SIGNAL NAME	FROM		TO		WIRE PART NO
	DESIGNATOR	PIN NO	DESIGNATOR	PIN NO	
PARB	J10	N	J9	19	
PARC	J10	9	J9	17	
PARD	J10	6	J9	N	
MODFRQ	J10	11	P1	15	
CK1004	J15	136	J8	13	
CK1004	J8	13	J9	T	
CK1004	J9	T	J14	T	
MODOUT	J8		P1	Z	
MICDRV	J8	17	J8	H	
STONI	J14	S	J3	6	
VCOOUT	J8	15	J3	Y	
VCOOUT	J3	Y	J4	7	
$\overline{\text{SELXMT}}$	J15	67	J8	R	
$\overline{\text{SELXMT}}$	J8	R	J12	8	

SIGNAL NAME	FROM		TO		WIRE PART NO
	DESIGNATOR	PIN NO	DESIGNATOR	PIN NO	
$\overline{\text{SELRCV}}$	J15	140	J8	9	
$\overline{\text{SELRCV}}$	J8	9	J12	9	
GHTREF	J15	49	J8	10	
$\overline{\text{TR1004}}$	J8	16	J12	M	
$\overline{\text{TR1004}}$	J12	M	J1	14	
IHTREF	J15	3	J8	21	
IHTREF	J8	21	J9	N	
POSGHT	J8	11	J9	11	
NEGGHT	J8	L	J9	10	
$\overline{\text{IHPHIT}}$	J8	Y	J9	Z	
$\overline{\text{DRPOUT}}$	J9	9	J1	9	
YBUFF	J14	J	P4	11	
YDEF	J3	P	J14	9	
YDEF	J14	9	P1	U	

Table 5-10. Interconnect Circuit Card 1A1A3 Wire List — Continued

SIGNAL NAME	FROM		TO		WIRE PART NO
	DESIGNATOR	PIN NO.	DESIGNATOR	PIN NO.	
XDEF	J3	N	P1	W	
XDEF	P1	W	J14	H	
$\overline{\text{THDHAR}}$	J15	73	J7	V	
$\overline{\text{THDHAR}}$	J15	73	J5	1R	
$\overline{\text{TIMLED}}$	J15	65	J9	E	
$\overline{\text{GHTLED}}$	J15	130	J9	22	
$\overline{\text{ØHTLED}}$	J15	114	J9	20	
$\overline{\text{IHOLED}}$	J15	63	J9	18	
$\overline{\text{IH4LED}}$	J15	118	J9	16	
$\overline{\text{IH8LED}}$	J15	122	J9	15	
$\overline{\text{DRPLED}}$	J15	126	J9	P	
$\overline{\text{CRCLED}}$	J15	62	J12	W	
$\overline{\text{CHGFRQ}}$	J15	139	J12	12	

SIGNAL NAME	FROM		TO		WIRE PART NO
	DESIGNATOR	PIN NO	DESIGNATOR	PIN NO.	
X BUFF	J14	8	P4	12	
$\overline{\text{TLPON}}$	J15	10	J12	16	
$\overline{\text{5 MIN}}$	J15	134	J9	12	
$\overline{\text{CONTIN}}$	J15	138	J9	F	
SYNC1	J15	75	J6	F	
SWRAT	J4	J	P2	9	
$\overline{\text{SINGL}}$	J4	10	P2	6	
MANSWP	J4	M	P2	5	
$\overline{\text{MANUL}}$	J4	K	P2	7	
LOCK	J4	12	P2	4	
ØERROR	J4	8	P2	10	
$\overline{\text{IMPLSA}}$	J15	15	J9	7	

Table 5-10. Interconnect Circuit Card 1A1A3 Wire List — Continued

SIGNAL NAME	FROM		TO		WIRE PART NO
	DESIGNATOR	PIN NO	DESIGNATOR	PIN NO	
CLKCNT	J11	5	[illegible]	21	
$\overline{\text{IMPLSB}}$	J15	17	[illegible]	5	
$\overline{\text{IMPLSD}}$	J15	19	[illegible]	7	
QUASI	J5	[illegible]	P4	[illegible]	
SWPVOL	J4	9	P2	8	
SPKVOL	J6	M	P4	1	
SPKDRV	J5	N	P4	2	
$\overline{\text{TACK}}$	J8	[illegible]	[illegible]	[illegible]	
MICRCV	J6	[illegible]	P3	[illegible]	
HDSDRV	J4	[illegible]	P3	6	
RCVTIP	J15	61	P6	4	
RCVRNG	J5	11	P6	[illegible]	

SIGNAL NAME	FROM		TO		WIRE PART NO
	DESIGNATOR	PIN NO	DESIGNATOR	PIN NO	
SPCTRM	J8	W	[illegible]	V	
XMTTIP	J15	135	P6	1	
XMTRNG	J15	137	P6	2	
$\overline{\text{NORM}}$	J3	T	P4	3	
$\overline{\text{NORM}}$	P4	3	J1	15	
1004LD	J12	L	P3	12	
NLNLED	J12	R	P3	10	
OSCLED	J12	N	P3	11	
$\overline{\text{QUASI}}$	J12	7	J13	L	
CKLOCK	J4	13	S1	(wiper)	
XJKTIP	P3	1	P5	1	
XJKRNG	P3	2	P5	2	

Table 5-10. Interconnect Circuit Card 1A1A3 Wire List — Continued

SIGNAL NAME	FROM		TO		WIRE PART NO
	DESIGNATOR	PIN NO	DESIGNATOR	PIN NO	
RJKTIP	P3	3	P5	3	
RJKRNG	P3	4	P5	4	
+5VDC	P1	4 & D	J1	4 & D	
+5VDC	P1	4 & D	J2	4 & D	
+5VDC	P1	4 & D	J3	4 & D	
+5VDC	P1	4 & D	J4	4 & D	
+5VDC	P1	4 & D	J5	4 & D	
+5VDC	P1	4 & D	J6	4 & D	
+5VDC	P1	4 & D	J7	4 & D	
+5VDC	P1	4 & D	J8	4 & D	
+5VDC	P1	4 & D	J9	4 & D	
+5VDC	P1	4 & D	J10	4 & D	
+5VDC	P1	4 & D	J11	4 & D	
+5VDC	P1	4 & D	J12	4 & D	
+5VDC	P1	4 & D	J13	4 & D	
+5VDC	P1	4 & D	J14	4 & D	
+5VDC	P1	4 & D	J15	54	
+5VDC	P1	4 & D	J15	22	
+5VDC	P1	4 & D	J15	18	
+5VDC	P1	4 & D	J12	F	
+5VDC	P1	4 & D	J4	4 & D	

SIGNAL NAME	FROM		TO		WIRE PART NO
	DESIGNATOR	PIN NO	DESIGNATOR	PIN NO	
+5VDC	P1	4 & D	P1	12 & N	
+5VDC	P1	4 & D	-	-	
+5VDC	E19	-	E20	-	20 AWG red 14"
+15VDC	P1	2.B	J1	2.B	
+15VDC	P1	2.B	J2	2.B	
+15VDC	P1	2.B	J3	2.B	
+15VDC	P1	2.B	J4	2.B	
+15VDC	P1	2.B	J5	2.B	
+15VDC	P1	2.B	J6	2.B	
+15VDC	P1	2.B	J7	2.B	
+15VDC	P1	2.B	J8	2.B	
+15VDC	P1	2.B	J9	2.B	
+15VDC	P1	2.B	J10	2.B	
+15VDC	P1	2.B	J11	2.B	
+15VDC	P1	2.B	J12	2.B	
+15VDC	P1	2.B	J13	2.B	
+15VDC	P1	2.B	J14	2.B	
+15VDC	P1	2.B	J15	32	
+15VDC	P1	2.B	J15	7	
-15VDC	P1	3.C	J1	3.C	
-15VDC	P1	3.C	J2	3.C	

Table 5-10. Interconnect Circuit Card 1A1A3 Wire List — Continued

SIGNAL NAME	FROM		TO		WIRE PART NO
	DESIGNATOR	PIN NO	DESIGNATOR	PIN NO	
-15VDC	P1	3.C	J3	3.C	
-15VDC	P1	3.C	J4	3.C	
-15VDC	P1	3.C	J5	3.C	
-15VDC	P1	3.C	J6	3.C	
-15VDC	P1	3.C	J7	3.C	
-15VDC	P1	3.C	J8	3.C	
-15VDC	P1	3.C	J9	3.C	
-15VDC	P1	3.C	J10	3.C	
-15VDC	P1	3.C	J11	3.C	
-15VDC	P1	3.C	J12	3.C	
-15VDC	P1	3.C	J13	3.C	
-15VDC	P1	3.C	J14	3.C	
-15VDC	P1	3.C	J15	38	
-15VDC	P1	3.C	J15	5	
CKTGND	P1	1.A	J1	1.A	
CKTGND	P1	1.A	J5	1.A	
CKTGND	P1	1.A	J6	1.A	
CKTGND	P1	1.A	J7	1.A	
CKTGND	P1	1.A	J8	1.A	
CKTGND	P1	1.A	J15	1	
CKTGND	P1	1.A	J15	9	
CKTGND	P1	1.A	P2	2	

SIGNAL NAME	FROM		TO		WIRE PART NO
	DESIGNATOR	PIN NO	DESIGNATOR	PIN NO	
CKTGND	P1	1.A	P4	15	
CKTGND	P1	1.A	E1	-	
CKTGND	E1	-	E2	-	20 AWG blk 9"
XMTGND	P1	15.S	J3	1.A	
XMTGND	J3	1.A	J4	1.A	
XMTGND	J4	1.A	P3	5	
XMTGND	P3	5	E5	-	
XMTGND	E5	-	E6	-	20 AWG blk 9"
DIGGND	P1	8.J	J11	1.A	
DIGGND	P1	8.J	J10	1.A	
DIGGND	P1	8.J	J9	1.A	
DIGGND	P1	8.J	P3	13	
DIGGND	P1	8.J	P2	1	
DIGGND	P1	8.J	P4	14	
DIGGND	P1	8.J	J15	109	
DIGGND	P1	8.J	J15	14	
DIGGND	P1	8.J	E3	-	
DIGGND	E3	-	E4	-	20 AWG blk 5"
DIGGND	E3	-	E17	-	20 AWG blk 8"

Table 5-10. Interconnect Circuit Card 1A1A3 Wire List — Continued

SIGNAL NAME	FROM		TO		WIRE PART NO
	DESIGNATOR	PIN NO	DESIGNATOR	PIN NO	
RCV GND	P1	22.Z	J13	1.A	
RCV GND	P1	22.Z	J2	1.A	
RCV GND	P1	22.Z	J12	1.A	
RCV GND	P1	22.Z	J15	125	
RCV GND	P1	22.Z	J15	77	
RCV GND	P1	22.Z	J14	1.A	
RCV GND	E7	-	E8	-	20 AWG blk 3"
+VREF	J13	5	J1	5	
+VREF	J13	5	J2	5	
+VREF	J13	5	J3	5	
+VREF	J13	5	J4	5	
+VREF	J13	5	J5	5	
+VREF	J13	5	J6	5	
+VREF	J13	5	J8	5	
+VREF	J13	5	J12	5	
+VREF	J13	5	J15	80	
-VREF	J1	6	J2	6	
-VREF	J1	6	J3	6	
-VREF	J1	6	J4	6	
-VREF	J1	6	J5	6	
-VREF	J1	6	J6	6	

SIGNAL NAME	FROM		TO		WIRE PART NO
	DESIGNATOR	PIN NO	DESIGNATOR	PIN NO	
-VREF	J1	6	J8	6	
-VREF	J1	6	J14	6	
-VREF	J1	6	J15	36	
-VREF	J1	6	P2	3	
-VREF	J1	6	J13	6	

Table 5-11. Mainframe Wire List

SIGNAL NAME	FROM		TO		WIRE PART NO
	DESIGNATOR	PIN NO	DESIGNATOR	PIN NO	
	T1	Blk	Space Lug #1	-	-
	T1	Grn	Space Lug #2	-	-
	T1	Wht Blk	Space Lug #3	-	-
	T1	Wht Grn	Space Lug #4	-	-
	Space Lug #1	-	A1-TB1	1	
	Space Lug #2	-	A1-TB1	2	
	Space Lug #3	-	A1-TB1	3	
	Space Lug #4	-	A1-TB1	4	
	T1	Red	A1-J6	1	
	T1	Red	A1-J6	14	
	Space Lug #10	-	Chassis Gnd.	-	
		TB1-1	V1	TB1-3	Insulated Bus Wire
		TB1-2	V1	TB1-4	Insulated Bus Wire
	A6	P1-1	V1	TB1-1	(Blk)
	A6	P1-2	V1	TB1-2	(Brn)
	A6	J1	A4	P2	-

Table 5-12. Rear Panel Assembly 2A1 Wire List

SIGNAL NAME	FROM		TO		WIRE PART NO
	DESIGNATOR	PIN NO	DESIGNATOR	PIN NO	
	Space Lug #9	-	TB1	Gnd. Screw	-
	Solder Lug #8	-	J4	-	-
	Solder Lug #7	-	J1	-	-
	Solder Lug #6	-	J3	-	-
	Solder Lug #5	-	J2	-	-
W11	-	-	XF1	2	
W12	XF1	1	FL1	3	
W13			FL1	2	
W14	-	-	FL1	1	

Table 5-13. Wiring Harness 2A1A2 Wire List

WIRE			FROM		TO		FUNCTION	WIRE NO.
SIZE	COLOR	LENGTH	DESIGNATOR	PIN Nº	DESIGNATOR	PIN Nº		
			J4	1	J4	A	Bus Wire	
20	Blk	11"	J4	1	FS1	8		1
			J4	2	J4	B	Bus Wire	
24	Org	12½"	J4	2	FS1	7		2
24	Org	9"	J4	2	J5	2		3
			J4	3	J4	C	Bus Wire	
24	Red	12½"	J4	3	FS1	6		4
24	Red	9"	J4	3	J5	3		5
			J4	4	J4	D	Bus Wire	
24	Grn	12½"	J4	4	FS1	5		6
24	Grn	8½"	J4	4	J5	4		7
24	Yel	10½"	J4	5	J5	W		8
24	Wht	18 3/4"	J4	6	J5	21		9
24	Red	8½"	J4	7	J5	H		10
24	Org	10½"	J4	8	J5	22		11
24	Yel	10"	J4	9	J5	17		12
24	Grn	10"	J4	10	J5	X		13
24	Blu	9"	J4	11	J5	16		14
24	Brn	7½"	J4	12	J5	7		15
24	Gry	4½"	J4	13	J5	13		16
24	Red	9½"	J4	14	J5	V		17
24	Vio	8"	J4	15	J5	14		18
24	Blk	6½"	J4	16	J5	5		19
24	Brn	6½"	J4	20	J5	K		20
24	Blk	10½"	J4	E	J5	U		21
24	Red	11"	J4	F	J5	20		22
24	Red	20"	J4	21	J3	F		23
24	Org	8½"	J4	H	J5	F		24
24	Red	10"	J4	J	J5	S		25
24	Gry	10½"	J4	K	J5	Y		26
24	Blk	10"	J4	L	J5	19		27
24	Org	8½"	J4	M	J5	12		28

Table 5-13. Wiring Harness 2A1A2 Wire List — Continued

WIRE			FROM		TO		FUNCTION	WIRE NO.
SIZE	COLOR	LENGTH	DESIGNATOR	PIN Nº	DESIGNATOR	PIN Nº		
24	Wht	8½"	J2	K	J2	F		29
24	Grn	14½"	J2	P	S4-C	14		30
24	Blu	7½"	J2	R	S4-D	13		31
24	Blk	9"	J2	S	J5	12		32
			J2	T	J4	A	Bus Wire	
24	Grn	8"	J2	U	J5	11		33
24	Red	24"	J2	V	J6	10		34
24	Yel	24"	J2	W	J6	11		35
24	Org	24"	J2	X	J6	4		36
24	Wht	24"	J2	Y	J6	6		37
H.T.	Red	4"	J2	Z	J3	1		38
			J2	1	J1	A	Bus Wire	
H.T.	Blu	14½"	J2	1	FS1	10		39
			J2	2	J2	B	Bus Wire	
24	Org	15½"	J2	2	FS1	7		40
			J2	3	J2	C	Bus Wire	
24	Red	15½"	J2	3	FS1	6		41
			J2	4	J2	D	Bus Wire	
			J2	4	J2	5	Bus Wire	
			J2	5	J2	E	Bus Wire	
			J2	5	J2	6	Bus Wire	
			J2	6	J2	F	Bus Wire	
24	Grn	15½"	J2	6	FS1	5		42
			J2	8	J2	J	Bus Wire	
			J2	8	J2	9	Bus Wire	
			J2	9	J2	K	Bus Wire	
20	Blk	13½"	J2	9	FS1	9		43
			J2	10	J2	11	Bus Wire	

Table 5-13. Wiring Harness 2A1A2 Wire List — Continued

WIRE			FROM		TO		FUNCTION	WIRE NO.
SIZE	COLOR	LENGTH	DESIGNATOR	PIN Nº	DESIGNATOR	PIN Nº		
			J2	L	J2	M	Bus Wire	
			J2	15	J2	S	Bus Wire	
			J2	15	J2	16	Bus Wire	
			J2	16	J2	T	Bus Wire	
20	Blk	11½"	J2	16	FS1	10		44
			J2	12	J2	N	Bus Wire	
24	Grn	14"	J2	12	FS1	5		45
24	Brn	15"	J2	U	Solder Lug#6		W6	46
24	Yel	12½"	J2	W	Solder Lug#7		W7	47
			J2	21	J2	Y	Bus Wire	
			J2	21	J2	22	Bus Wire	
			J2	22	J2	Z	Bus Wire	
20	Blk	10½"	J2	22	FS1	10		48
			J5	1	J5	A	Bus Wire	
			J5	2	J5	B	Bus Wire	
			J5	3	J5	C	Bus Wire	
			J5	4	J5	D	Bus Wire	
24	Blk	9½"	J5	6	S3	3		49
24	Red	8½"	J5	E	S3	2		50
20	Blk	18½"	J5	1	FS1	8		51
24	Blk	9½"	J5	1	S4A	14		52
24	Org	9"	J5	2	R2	2		53
24	Red	9"	J5	3	S4B	7		54
24	Yel	8½"	J5	8	S4A	6		55
24	Vio	8"	J5	11	S4A	1		56
24	Red	7½"	J5	15	S4A	5		57
24	Grn	8"	J5	J	S4A	4		58
24	Wht	7"	J5	L	S4A	3		59
24	Org	9½"	J5	2	S4B	9		60

Table 5-13. Wiring Harness 2A1A2 Wire List — Continued

WIRE			FROM		TO		FUNCTION	WIRE NO.
SIZE	COLOR	LENGTH	DESIGNATOR	PIN Nº	DESIGNATOR	PIN Nº		
H.V.	Brn	17"	J3	A	FS1	9		61
H.V.	ORg	11½"	J3	J	R1	1		62
H.V.	Yel	11½"	J3	L	J6	3		63
H.V.	Gry	11 3/4	J3	T	J6	7		64
H.V.	Red		J3	C	FS1	6		65
H.V.	Blu	13"	J3	P	R3	3	W23	66
H.V.	Vio	13"	J3	R	R3	2	W22	67
H.V.	Grn	13"	J3	N	R3	1	W21	68
H.V.	Wht	12"	J3	Y	R4	2	W19	69
H.V.	Blk	12"	J3	Z	R4	3	W20	70
			R2	1	R2	3	Bus Wire	
H.V.	Red	7½"	R2	1	XDS1	1		71
			XDS1	1	XDS2	1	Insul. Bus Wire	
			XDS2	1	XDS3	1	Insul. Bus Wire	
			XDS3	1	XDS4	1	Insul. Bus Wire	
H.V.	Blk	25"	XDS1	2	FS1	9		72
			XDS1	2	XDS2	2	Insul. Bus Wire	
			XDS2	2	XDS3	2	Insul. Bus Wire	
			XDS3	2	XDS4	2	Insul. Bus Wire	
H.V.	Gry	8"	J6	1	J6	7		73
24	Org	15"	J6	9	R1	2		74
H.V.	Blu	23½"	J6	8	R4	1	W18	75
			S4D	7	R7	1	--	
			S4D	8	S4D	9	Bus Wire	
			S4D	9	S4D	10	Bus Wire	
			S4D	10	S4D	11	Bus Wire	
			S4D	11	S4D	12	Bus Wire	
24	Brn	31"	S4D	12	Solder Lug#6	--	W6	76

Table 5-13. Wiring Harness 2A1A2 Wire List — Continued

WIRE			FROM		TO		FUNCTION	WIRE NO.
SIZE	COLOR	LENGTH	DESIGNATOR	PIN Nº	DESIGNATOR	PIN Nº		
			S4A	1	S4A	2	Bus Wire	
			S4C	14	R5	1	--	
			S4C	1	R6	1	--	
			S4C	1	C1	1	--	
			S4C	2	S4C	3	Bus Wire	
			S4C	3	S4C	4	Bus Wire	
			S4C	4	S4C	5	Bus Wire	
			S4C	5	S4C	6	Bus Wire	
24	Yel	28"	S4C	6	Solder Lug#7	--	W7	77
			R6	2	S4B	9	--	
			C1	2	S4B	8	--	
20	Blk	8½"	S3	13	S4A	14		78
24	Blk	15"	FS1	8	--	--	W13	79
24	Blk	5¼"	FS1	8	Solder Lug#8	--	W8	80
24	Blk	4"	FS1	8	Solder Lug#5	--	W5	81
24	Blk	5½"	P1	3	Solder Lug#5	--	W5	82
20	Vio	13½"			FS1	1		83
20	Brn	13"						84
20	Brn	8"			--	--	W14	85
20	Red	13½"			FS1	3		86
24	Wht	14½"			FS1	4		87
					S1	6	Bus Wire	

Table 5-13. Wiring Harness 2A1A2 Wire List — Continued

WIRE			FROM		TO		FUNCTION	WIRE NO.
SIZE	COLOR	LENGTH	DESIGNATOR	PIN Nº	DESIGNATOR	PIN Nº		
20	Blk	12"	Spade Lug#9	--	Spade Lug#10	--		88
24	Org	8"	--	--	--	--	W12	89
			S4P	7	K5	2	Insulate Leads	
			R7	2	S4B	7	Insulate Leads	
24	W/Yel	9½"	J4	17	J2	20		90
24	W/Org	10"	J4	18	J2	18		91
24	W/Blu	10"	J4	19	J2	X		92
24	W/Grn	11"	J4	22	J2	V		93
H.V.	Blk	19½"	S2	2	--	--	W11	94
H.V.	Org	22½"	S1	1	S2	3	W15	95

CHAPTER 6

ILLUSTRATED PARTS BREAKDOWN

6-1. GENERAL. This chapter of the manual provides parts lists and associated illustrations for identification of replaceable parts, and is used for ordering spare or repair parts.

6-2. PARTS LISTS. Parts lists include the following information:

a. Figure and Reference Number. The "Fig. & ref no." column contains a figure and reference number for every part listed. This figure and reference number enables the user to locate any part by referring to that illustration which contains the same figure and reference number. The figure number is listed at the beginning of the figure and is repeated on each continuation page of the figure listing, with item reference numbers given directly below. The alphanumerical reference designations assigned to parts are listed first, followed by numerical index numbers for all miscellaneous items.

b. Description. The "Description" column contains a brief description of the part. The parts that make up any assembly have their descriptions indented under their next higher assembly (nha) listing.

c. Manufacturer's Code. The "Mfr code" column contains a five-digit code indicating the manufacturer of the part. Codes, names, and addresses are in accordance with Federal Supply Code for Manufacturers Cataloging Handbooks H4-1 and H4-2.

When a code has not been assigned to the manufacturer, the word NONE appears in this column; the manufacturer's name and address appears in the "Description" column for such items.

Common commercial items, obtainable from a wide range of sources, are designated COML in this column.

d. Manufacturer's Part Number. The "Mfr part no." column contains the manufacturer's part number for all parts which are not manufactured by or solely for Halcyon, or which are designated COML.

e. Halcyon Part Number. The "Halcyon part no." column contains the Halcyon part number for all parts.

f. SMR Code. The "SMR code" column contains the Source, Maintenance, and Recoverability code assigned to each replaceable part or assembly. Definitions of SMR codes are set forth in TO 00-25-195.

Fig. & ref no.	Description	Mfr code	Mfr part no.	Halcyon part no.	SMR code
Fig 6-1	UNIVERSAL TEST SYSTEM MODEL 520B2-07	51701		9500-1035-03	PEFFDS
	UNIVERSAL TEST SYSTEM MODEL 520B2-17	51701		9500-1035-04	PEFFDS
1	MODEL 520B2 PLUG-IN WITHOUT P/AR (Used on Model 520B2-07) (See fig. 6-2 for breakdown)	51701		9000-0521-20	XBFZZ
	MODEL 520B2 PLUG-IN WITH P/AR (Used on Model 520B2-17) (See fig. 6-2 for breakdown)	51701		9000-0521-21	XBFZZ
2	MODEL 500B MAINFRAME (See fig. 6-27 for breakdown)	51701		9000-1020-00	XBFFF
3	CABLE ASSY, Power, electrical	51701		6001-0503-00	XBFZZ
4	GRATICULE OVERLAY KIT	51701		9000-1061-00	
	GRATICULE OVERLAY, C5/S3 COND	51701		2500-1061-01	
	GRATICULE OVERLAY, C4 COND	51701		2500-1061-02	
	GRATICULE OVERLAY, C2 COND	51701		2500-1061-03	
	GRATICULE OVERLAY, C1 COND	51701		2500-1061-04	
	GRATICULE OVERLAY, 3002 COND	51701		2500-1061-05	
	GRATICULE OVERLAY, C3 COND	51701		2500-1061-06	
	GRATICULE OVERLAY, 4002 COND	51701		2500-1061-07	
	GRATICULE OVERLAY, SID	51701		2500-1061-08	
	GRATICULE OVERLAY GRID	51701		2500-1061-09	

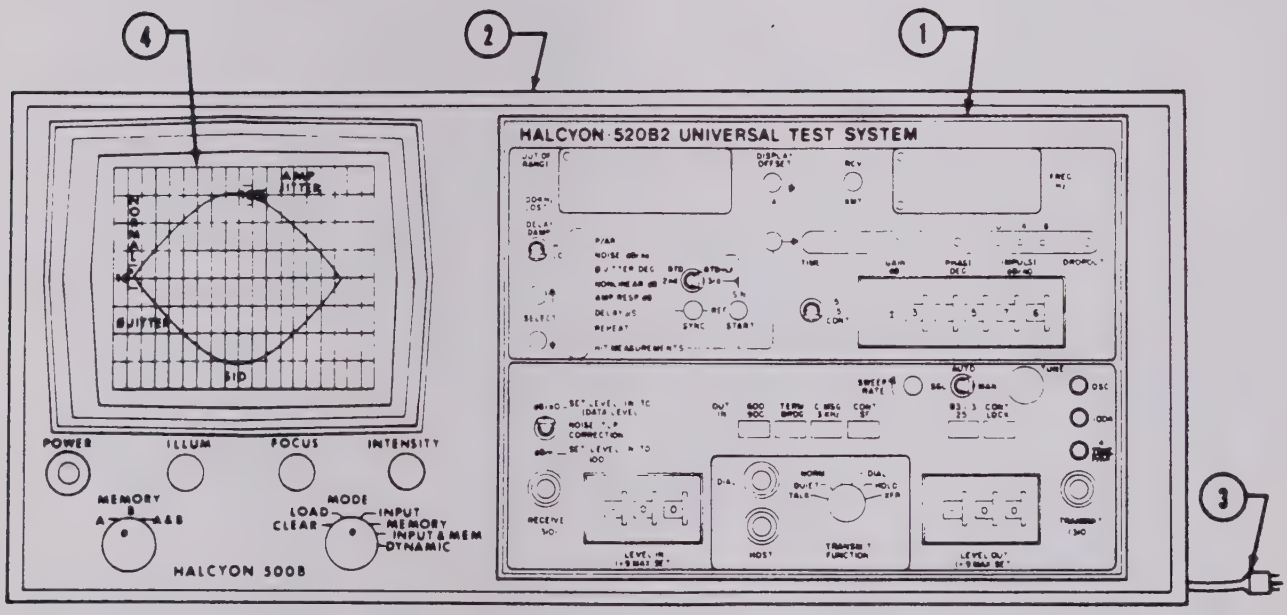

Figure 6-1. Universal Test System

Fig. & ref no.	Description	Mfr code	Mfr part no.	Halcyon part no.	SMR code
Fig. 6-2	MODEL 520B2 PLUG-IN WITHOUT P/AR (Used on Model 520B2-07) (See fig. 6-1, ref no. 1, for nha)	51701		9000-0521-20	XBFZZ
	MODEL 520B2 PLUG-IN WITH P/AR (Used on Model 520B2-17) (See fig. 6-1, ref no. 1, for nha)	51701		9000-0521-21	XBFZZ
A1	ENCLOSURE ASSY (See fig. 6-3 for breakdown)	51701		8500-0521-03	AFFFZ
A2	REPEAT AND TRANSMIT FUNCTION CIRCUIT CARD ASSY (See fig. 6-12 for breakdown)	51701		8000-1041-00	PAFFFP
A3	NOISE DETECTOR CIRCUIT CARD ASSY (See fig. 6-13 for breakdown)	51701		8000-2089-01	PAFFFP
A4	A/D CONVERTER CIRCUIT CARD ASSY (See fig. 6-14 for breakdown)	51701		8000-2090-01	PAFFFP
A5	PHASE JITTER CIRCUIT CARD ASSY (See fig. 6-15 for breakdown)	51701		8000-2094-01	PAFFFP
A6	PHASE AGC CIRCUIT CARD ASSY (See fig. 6-16 for breakdown)	51701		8000-0020-02	PAFFFP
A7	NONLINEAR DISTORTION CIRCUIT CARD ASSY (See fig. 6-17 for breakdown)	51701		8000-0104-00	PAFFFP
A8	DATA ACCUMULATOR CIRCUIT CARD ASSY (See fig. 6-18 for breakdown)	51701		8000-1003-00	PAFFFP
A9	DATA AND DISPLAY CONTROL CIRCUIT CARD ASSY (See fig. 6-19 for breakdown)	51701		8000-1008-01	PAFFFP
A10	MODULATOR CIRCUIT CARD ASSY (See fig. 6-20 for breakdown)	51701		8000-1012-00	PAFFFP
A11	SWEEP AND VCO CIRCUIT CARD ASSY (See fig. 6-21 for breakdown)	51701		8000-1019-00	PAFFFP
A12	INTEGRATION AND HITS PROCESS CIRCUIT CARD ASSY (See fig. 6-22 for breakdown)	51701		8000-1038-00	PAFFFP
A13	AUTORANGING AND TLP CIRCUIT CARD ASSY (See fig. 6-23 for breakdown)	51701		8000-1039-00	PAFFFP
A14	FADE OUT CIRCUIT CARD ASSY (See fig. 6-24 for breakdown)	51701		8000-0001-13	PAFFFP
A15	DIGITAL EVENT BUFFERS CIRCUIT CARD ASSY (Used on Model 520B2-07) (See fig. 6-25 for breakdown)	51701		8000-0003-91	
A15	P/AR GENERATOR AND RECEIVER CIRCUIT CARD ASSY (Used on Model 520B2-17) (See fig. 6-26 for breakdown)	51701		8000-0003-76	PAFFFP
MP1	COVER, Top	51701		2500-0521-15	XBFZZ
MP2	COVER, Bottom	51701		2500-0515-06	XBFZZ
1	SCREW, Machine, no. 6-32, 1/4 in. lg, pan hd, slot dr, steel, cd pl	96906	MS35223-26	2800-0143-00	XBFZZ
2	Not used				
3	SCREW, Machine, no. 6-32, 3/8 in. lg, pan hd, slot dr, steel, cd pl	96906	MS35223-28	2800-0145-00	XBFZZ

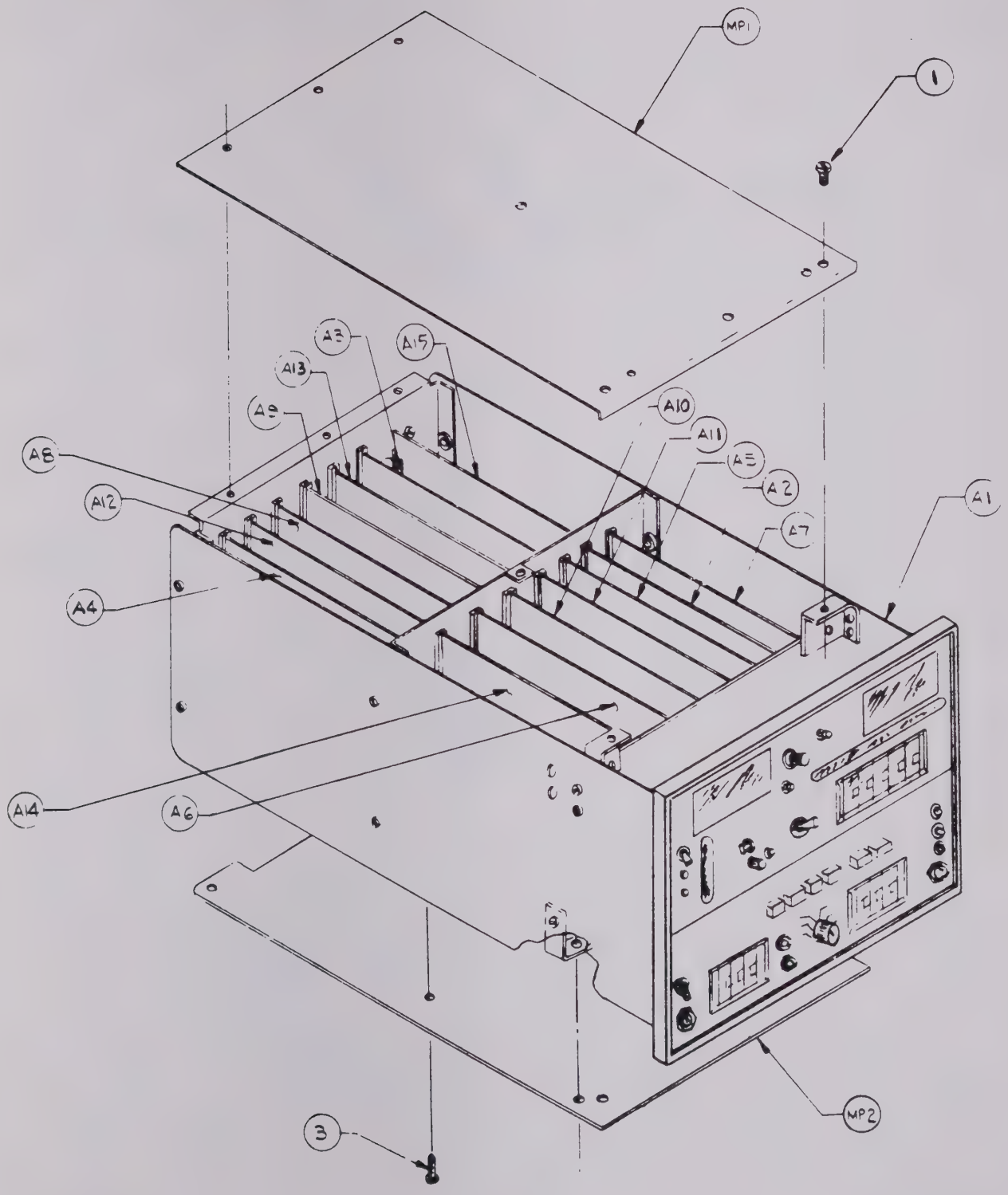

Figure 6-2. Model 520B2 Plug-In

Fig. & ref no.	Description	Mfr code	Mfr part no.	Halcyon part no.	SMR code
Fig 6-3	ENCLOSURE ASSY (See fig. 6-2, ref no. A1, for nha)	51701		8500-0521-03	AFFFZ
A1	FRONT PANEL ASSY (See fig. 6-4 for breakdown)	51701		8210-0521-00	AFFFZ
A2	REAR PANEL ASSY (See fig. 6-10 for breakdown)	51701		8200-0521-04	XBFZZ
A3	INTERCONNECT CIRCUIT CARD ASSY (See fig. 6-11 for breakdown)	51701		8000-1018-00	XBFZZ
MP1	PANEL, Side	51701		2500-0515-01	XBFZZ
MP2	Same as MP1				
MP3	DIVIDER, Rear	51701		2500-0515-04	XBFZZ
MP4	DIVIDER, Center	51701		2500-0515-03	XBFZZ
MP5	BEZEL	51701		2500-2096-02	XBFZZ
MP6	BRACKET, Vertical	51701		2500-0515-09	XBFZZ
MP7	Same as MP6				
MP8	BRACKET, Mounting, bottom cover	51701		2500-2133-00	XBFZZ
MP9	Same as MP8				
MP10 thru MP28	HOLDER, Electrical card	23880	1450F	1401-0002-00	XBFZZ
MP29	INSULATOR, Mother board	51701		2500-0001-01	XBFZZ
MP30	Same as MP10				
MP31	Same as MP10				
1	SCREW, Machine, no. 6-32, 1/4 in. lg, pan hd, slot dr, steel, cd pl	96906	MS35223-26	2800-0143-00	XBFZZ
2	NUT, Plain, assembled washer, no. 8-32, steel, cd pl	78189	510-081810-01	2800-0024-00	XBFZZ
3	WASHER, Lock, internal-tooth, no. 6, cres	96906	MS35333-71	2800-0073-00	XBFZZ
4	SCREW, Machine, no. 4-40, 3/8 in. lg, binding hd, slot dr, nylon	83330	2501	2801-0023-00	XBFZZ
5	SCREW, Machine, no. 6-32, 3/8 in. lg, pan hd, slot dr, steel, cd pl	96906	MS35223-28	2800-0145-00	XBFZZ
6	INSULATOR, Washer, 0.141 in. ID, 0.375 in. OD, 0.063 in. thk, nylon	83330	2672	2800-1066-00	XBFZZ

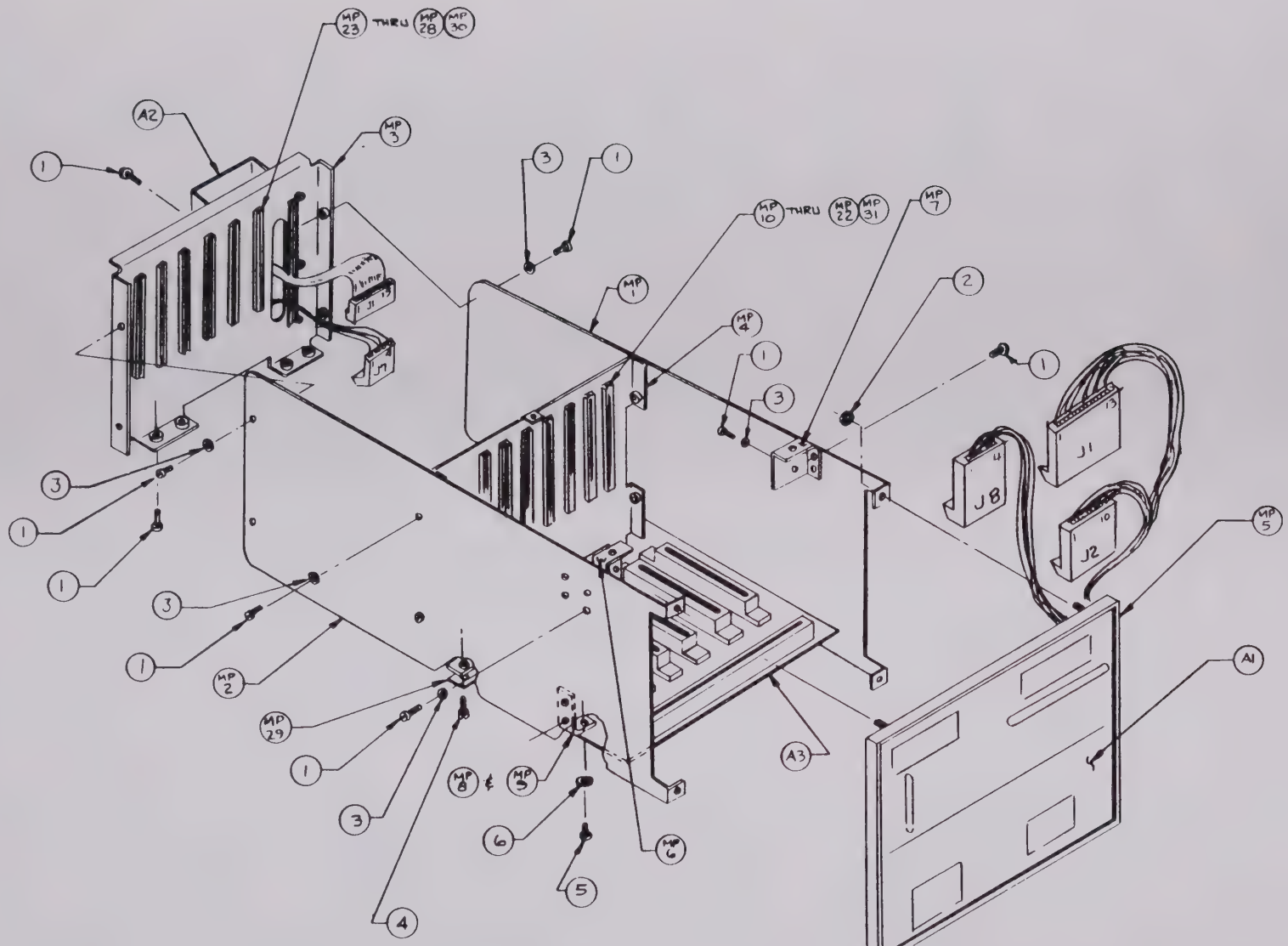

Figure 6-3. Enclosure Assembly 1A1

Fig. & ref no.	Description	Mfr code	Mfr part no.	Halcyon part no.	SMR code
Fig 6-4	FRONT PANEL ASSY (See fig. 6-3, ref no. A1, for nha)	51701		8210-0521-00	AFFFZ
A1	FRONT PANEL DISPLAY CIRCUIT CARD ASSY (See fig. 6-5 for breakdown)	51701		8000-0103-00	PAFFFP
A2	TERMINATION CIRCUIT CARD ASSY (See fig. 6-6 for breakdown)	51701		8000-2084-00	PAFZZN
A3	INTEGRATION THUMBWHEEL CIRCUIT CARD ASSY (See fig. 6-7 for breakdown)	51701		8000-1021-00	PAFFFP
A4	PREAMPLIFIER AND MODE SELECT CIRCUIT CARD ASSY (See fig. 6-8 for breakdown)	51701		8000-2086-01	PAFFFP
A5	VERTICAL INTERCONNECT CIRCUIT CARD ASSY (See fig. 6-9 for breakdown)	51701		8000-2117-01	XBFZZ
CA1	CABLE ASSY, Special purpose, electrical	51701		6010-2155-04	XBFZZ
CA2	CABLE ASSY, Special purpose, electrical	51701		6010-2153-10	XBFZZ
CA3	CABLE ASSY, Special purpose, electrical	51701		6010-2157-05	XBFZZ
CA4	CABLE ASSY, Special purpose, electrical	51701		6010-2156-09	XBFZZ
CA5	CABLE ASSY, Special purpose, electrical	51701		6010-2153-13	XBFZZ
CA6	CABLE ASSY, Special purpose, electrical	51701		6010-2153-11	XBFZZ
CA7	CABLE ASSY, Special purpose, electrical	51701		6010-2155-12	XBFZZ
CA8 thru CA10	Not used				
CA11	CABLE ASSY, Special purpose, electrical	51701		6010-2156-13	XBFZZ
CA12	Not used				
CA13	CABLE ASSY, Special purpose, electrical	51701		6010-2155-15	XBFZZ
CR1 thru CR3	LAMPHOLDER	55776	BIM56	2400-0006-00	PAFZZN
J1	CONNECTOR BODY, Plug, electrical, 13 contacts	27264	09-50-3131	2101-0017-13	XAFZZ
J2	CONNECTOR BODY, Plug, electrical, 10 contacts	27264	09-50-3101	2101-0017-10	XAFZZ
J3	CONNECTOR BODY, Plug, electrical, 2 contacts	27264	09-50-3021	2101-0017-02	PAFZZN
J4	JACK, Telephone	27264	M112B	2100-0204-00	XAFZZ
J5	Same as J4				
J6	JACK, Telephone	82389	MN-112B	2100-0204-01	XAFZZ
J7	Same as J6				
J8	CONNECTOR BODY, Plug, electrical, 4 contacts	27264	09-50-3041	2101-0017-04	XAFZZ
MP1	PANEL, Front	51701		2500-0521-05	XBFZZ
MP2	Not used				
MP3	POST, Electrical-mechanical equipment	83330	8324	2800-7200-36	
MP4	INSULATOR, Standoff, no. 4-40, 5/8 in. lg	83330	8678	2800-7218-07	XBFZZ
MP5 thru MP8	Same as MP3				
MP9	PUSH BUTTON	09353	8018 MEDIUM BLACK (2) CAP	2401-0053-01	PAFZZN
MP10	PUSH BUTTON	09353	8018 MEDIUM RED (3) CAP	2401-0053-02	PAFZZN
MP11 thru MP13	Same as MP9				
MP14 thru MP16	KNOB	51701		2500-1134-01	
MP17	KNOB	49956	70-2-2G	2401-0054-07	PAFZZN

Fig. & ref no.	Description	Mfr code	Mfr part no.	Halcyon part no.	SMR code
Fig. 6–4	(Continued)				
MP18	KNOB	49956	70-2WD-2G	2401-0054-06	PAFZZN
MP19 thru MP24	Not used				
MP25 thru MP49	CONTACT, Electrical	27264	08-50-0106	2101-0017-30	PAFZZN
MP50	Not used				
MP51 thru MP54	POST, Electrical-mechanical equipment	06540	8103-SS-0256	2801-0010-00	XBFZZ
MP55	INSULATOR, Standoff, no. 4–40, 3/4 in. lg	83330	8684	2800-7218-09	XBFZZ
MP56	Same as MP55				
MP57 thru MP60	Same as MP25				
MP61 thru MP64	NUT, Dress	51701		2500-0001-37	XBFZZ
MP65 thru MP67	INSULATOR, Standoff, no. 4–40, 1/2 in. lg	83330	8672	2800-7218-05	XBFZZ
MP68	INSULATOR	51701		2500-0001-72	XBFZZ
MP69	INSULATOR	51701		2500-0001-73	XBFZZ
R1	RESISTOR, Variable, 100k ohms, 20%, 1/2 w	01121	WA2H056S104MA	4751-0054-00	
R2	RESISTOR, Variable, 5k ohms, 5%, 2 w	73138	7276-R5K-L.25	4751-0080-56	PAFZZN
R3	RESISTOR, Fixed, film, 604 ohms, 1%, 1/2 w	16299	NA65604R1%	4705-0172-00	XAFZZ
R4	RESISTOR, Fixed, composition, 220 ohms, 5%, 1/4 w	81349	RC07GF221J	4700-0381-00	PAFZZN
S1	SWITCH, Rotary, 10 pole, 6 positions	71590	SA-513-PS52-4A	5100-0305-00	PAFZZN
S2	SWITCH ASSY, Push button, 2 stations, 1 amp, 300 v, 50 w	51701		5100-0127-00	PAFZZN
S3	SWITCH, Toggle, spdt	09353	7103-P3	5100-0200-00	PAFZZN
S4	SWITCH ASSY, Thumbwheel, 3 stations	53985	IS0-1495	5100-0004-02	PAFZZN
S5	Same as S4				
1	SCREW, Machine, no 4–40, 1/4 in. lg, pan hd, slot dr, steel, cd pl	96906	MS35223-13	2800-0123-00	XBFZZ
2	INSULATOR, Washer, 0.141 in. ID, 0.375 in. OD, 0.063 in. thk, nylon	83330	2672	2800-1066-00	XBFZZ
3	NUT, Dress	09353	7099		XBFZZ
4	WASHER, Lock, split-ring, no. 2, steel, cd pl	96906	MS35338-39	2800-0041-00	XBFZZ
5	NUT, Plain, hexagon, no. 2-56, cres	96906	MS35649-224	2800-0011-00	XBFZZ
6	SCREW, Machine, no. 2-56, 1/4 in. lg, pan hd, slot dr, steel, cd pl	96906	MS35223-3	2800-0103-00	XBFZZ
7	SCREW, Machine, no. 4–40, 1 in. lg, pan hd, slot dr, steel, cd pl	96906	MS35223-21	2800-0131-00	XBFZZ

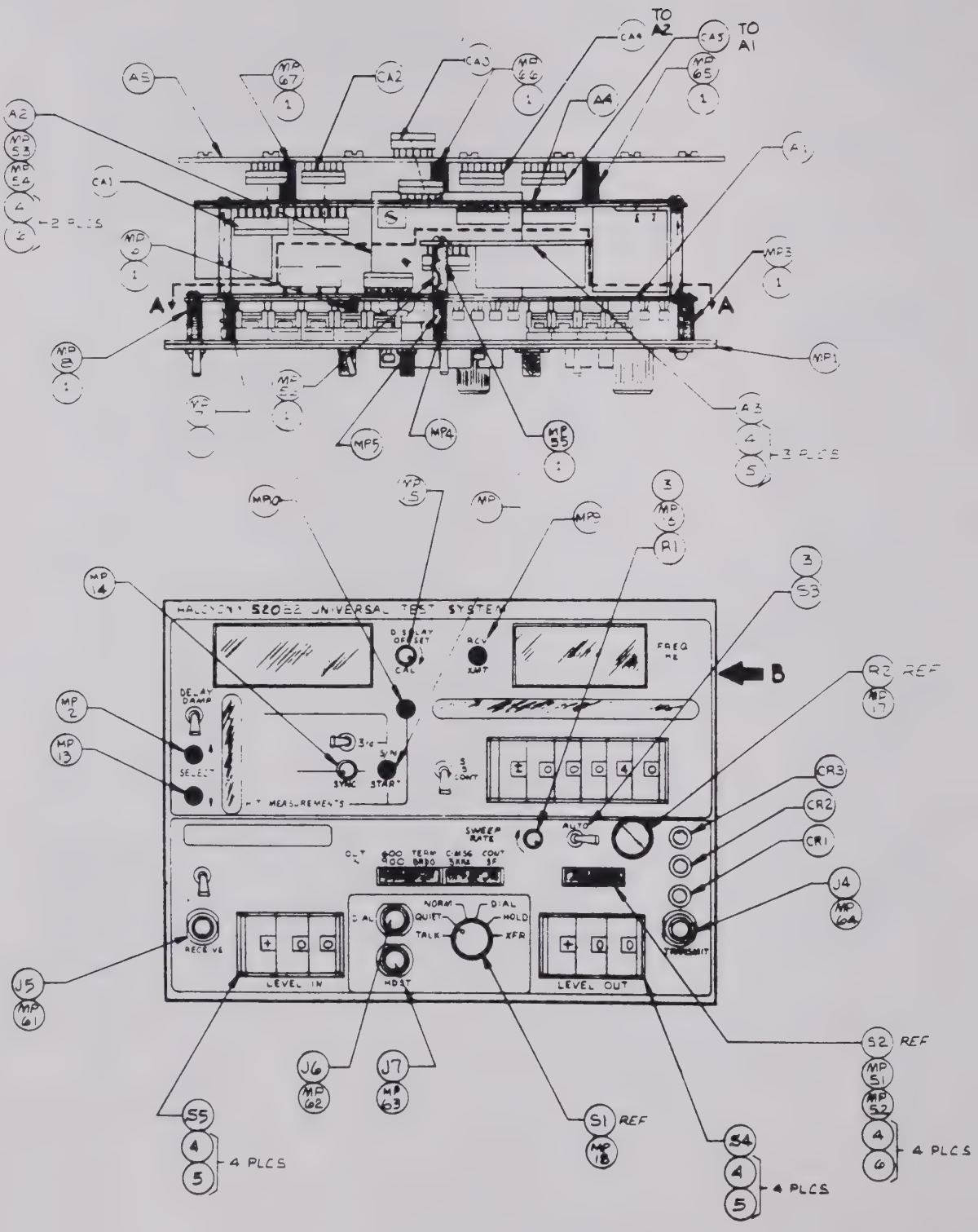

Figure 6-4. Front Panel Assembly 1A1A1 (Sheet 1 of 3)

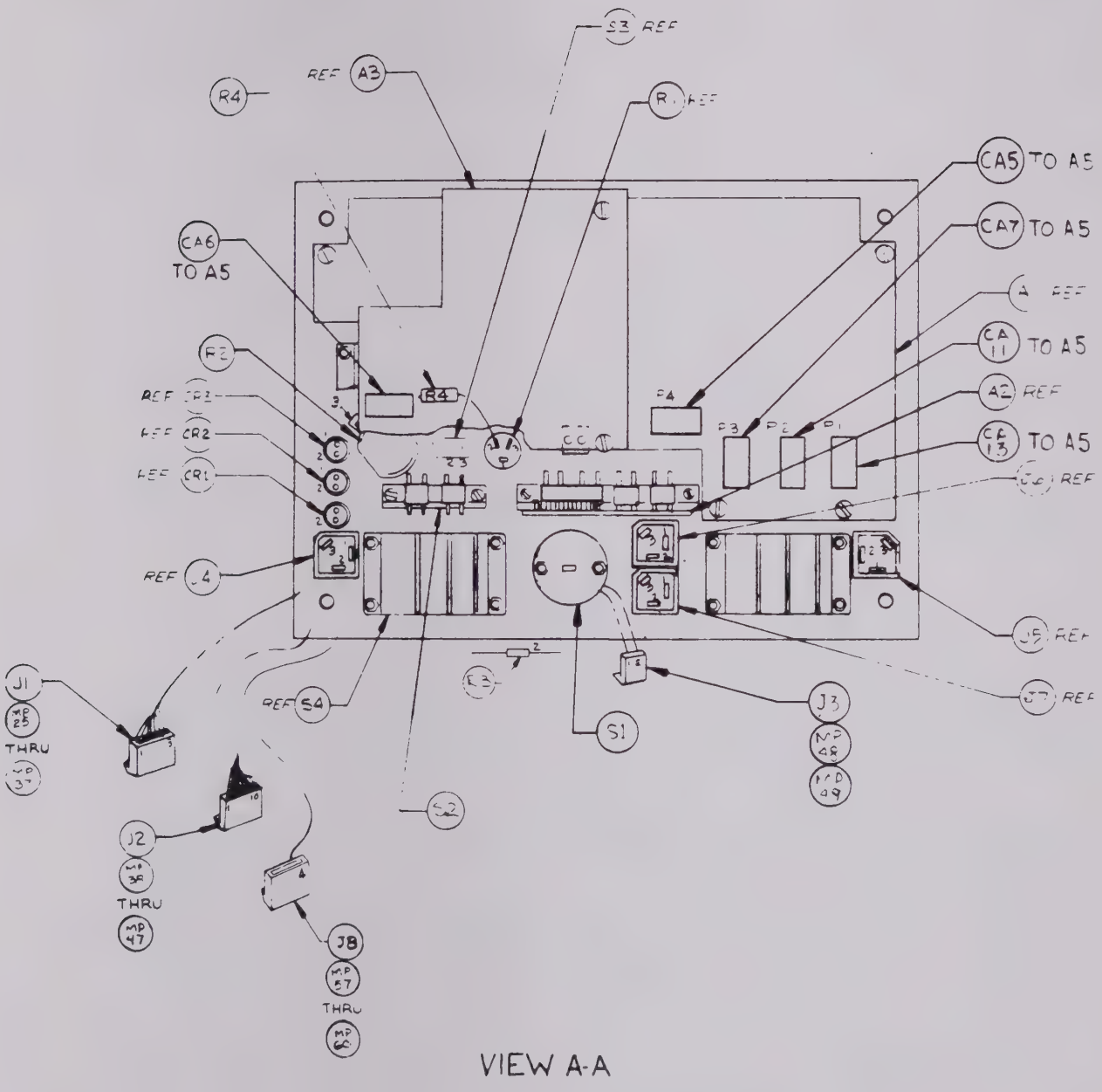

Figure 6-4. Front Panel Assembly 1A1A1 (Sheet 2 of 3)

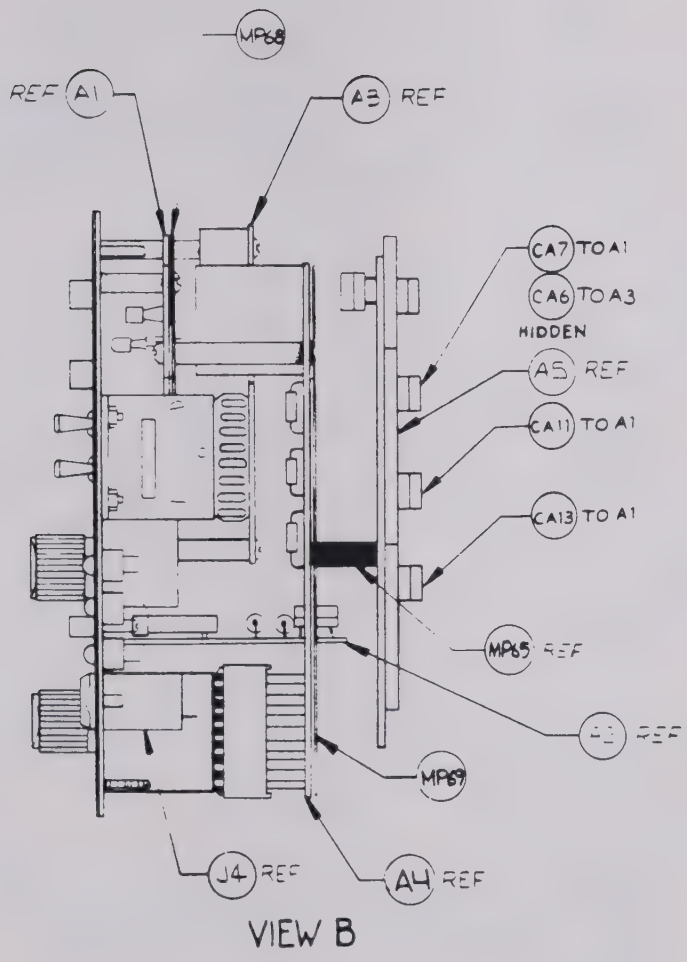

Figure 6-4. Front Panel Assembly 1A1A1 (Sheet 3 of 3)

Fig. & ref no.	Description	Mfr code	Mfr part no.	Halcyon part no.	SMR code
Fig. 6-5	FRONT PANEL DISPLAY CIRCUIT CARD ASSY (See fig. 6-4, ref no. A1, for nha)	51701		8000-0103-00	PAFFFP
C1	CAPACITOR, Fixed, electrolytic, 10 uF, -10 +50%, 35 vdcw (Manufactured by Elna America, Inc., 153 E. Savarona Way, Carson City, California 90746)	NONE	35TL10UF	1504-0052-00	PAFZZN
CR1 thru CR11	LIGHT EMITTING DIODE, red	01295	TIL209A	2400-0002-00	PAFZZN
CR12	LIGHT EMITTING DIODE, green	50347	OPL-211	2400-0003-00	PAFZZN
CR13	Same as CR12				
CR14 thru CR19	Same as CR1				
IC1	INDICATOR, Digital display	58361	MAN73	2400-0058-00	PAFZZN
IC2 thru IC5	INDICATOR, Digital display	28480	5082-7611	2400-0057-00	PAFZZN
IC6	INTEGRATED CIRCUIT	50088	MK5007N	3130-5007-00	PAFZZN
IC7 thru IC10	INDICATOR, Digital display	28480	5082-7631	2400-0056-00	PAFZZN
IC11	INTEGRATED CIRCUIT	01295	SN7448N	3130-0048-00	PAFZZN
IC12	Same as IC11				
MP1 thru MP9	SOCKET, Plug-in electronic components, 14 contacts	52072	CA-14SE-103WW	2101-0008-00	XBFZZ
MP10 thru MP12	Not used				
MP13	POST, Electrical-mechanical equipment	06540	8162-A-17	2800-7200-64	PAFZZN
MP14	Same as MP13				
MP15	CONNECTOR, Receptacle, electrical, 14 contacts	91506	714-AG2D	2101-0006-00	PAFZZN
MP16	CONNECTOR, Receptacle, electrical, 16 contacts	91506	716-AG2D	2101-0007-00	PAFZZN
MP17	Same as MP15				
MP18	Same as MP15				
PC1	PRINTED WIRING BOARD	51710		1700-0103-00	XAFZZ
Q1	TRANSISTOR	27014	2N3904	4800-3904-00	PAFZZN
Q2	Same as Q1				
Q3	TRANSITOR	27014	2N3906	4800-3906-00	PAFZZN
Q4	Same as Q1				
Q5	Same as Q1				
Q6	Same as Q3				
Q7 thru Q9	Same as Q1				
Q10 thru Q15	Same as Q3				
Q16 thru Q19	Same as Q1				

Fig. & ref no.	Description	Mfr code	Mfr part no.	Halcyon part no.	SMR code
Fig 6-5	(Continued)				
Q20 thru Q23	Same as Q3				
Q24 thru Q30	Same as Q1				
R1	RESISTOR, Fixed, composition, 390 ohms, 5%, 1/4 w	81349	RC07GF391J	4700-0387-00	PAFZZN
R2	Same as R1				
R3	RESISTOR, Fixed, wire wound, 0.56 ohm, 5%, 1 w	75042	BW-20-0.56-5%	4707-1507-09	PAFZZN
R4	Same as R3				
R5 thru R11	RESISTOR, Fixed, film, 1k ohms, 1%, 1/8 w	16299	NA551K1%	4703-0193-00	PAFZZN
R12	Same as R3				
R13	RESISTOR, Variable, 10k ohms, 20%, 1/2 w	01121	WA2G056103A	4751-0050-01	PAFZZN
R14	Same as R3				
R15	Same as R1				
R16 thru R19	Same as R3				
R20	Same as R1				
R21	Same as R1				
R22 thru R28	Same as R5				
R29	RESISTOR, Variable, 5k ohms, 10%, 3/4 w	71450	6P1070-502	4751-0029-00	PAFZZN
R30 thru R33	RESISTOR, Fixed, composition, 1k ohms, 5%, 1/4 w	81349	RC07GF102J	4700-0397-00	PAFZZN
S1	SWITCH, Push button, spdt	09353	8121-C	5100-0205-00	PAFZZN
S2	SWITCH, Toggle, spdt	09353	7101-P3-Y-C	5100-0204-00	PAFZZN
S3	Same as S1				
S4	Same as S1				
S5	Same as S2				
S6	Same as S2				
S7	Same as S1				
S8	SWITCH, Toggle, spdt	09353	7103-P3-Y-C	5100-0207-00	PAFZZN
S9	Same as S1				
1	WASHER, Lock, split-ring, no. 4, steel, cd pl	96906	MS35338-40	2800-0042-00	XBFZZ
2	SCREW, Machine, no. 4-40, 5/16 in. lg, pan hd, slot dr, steel, cd pl	96906	MS35223-14	2800-0124-00	XBFZZ

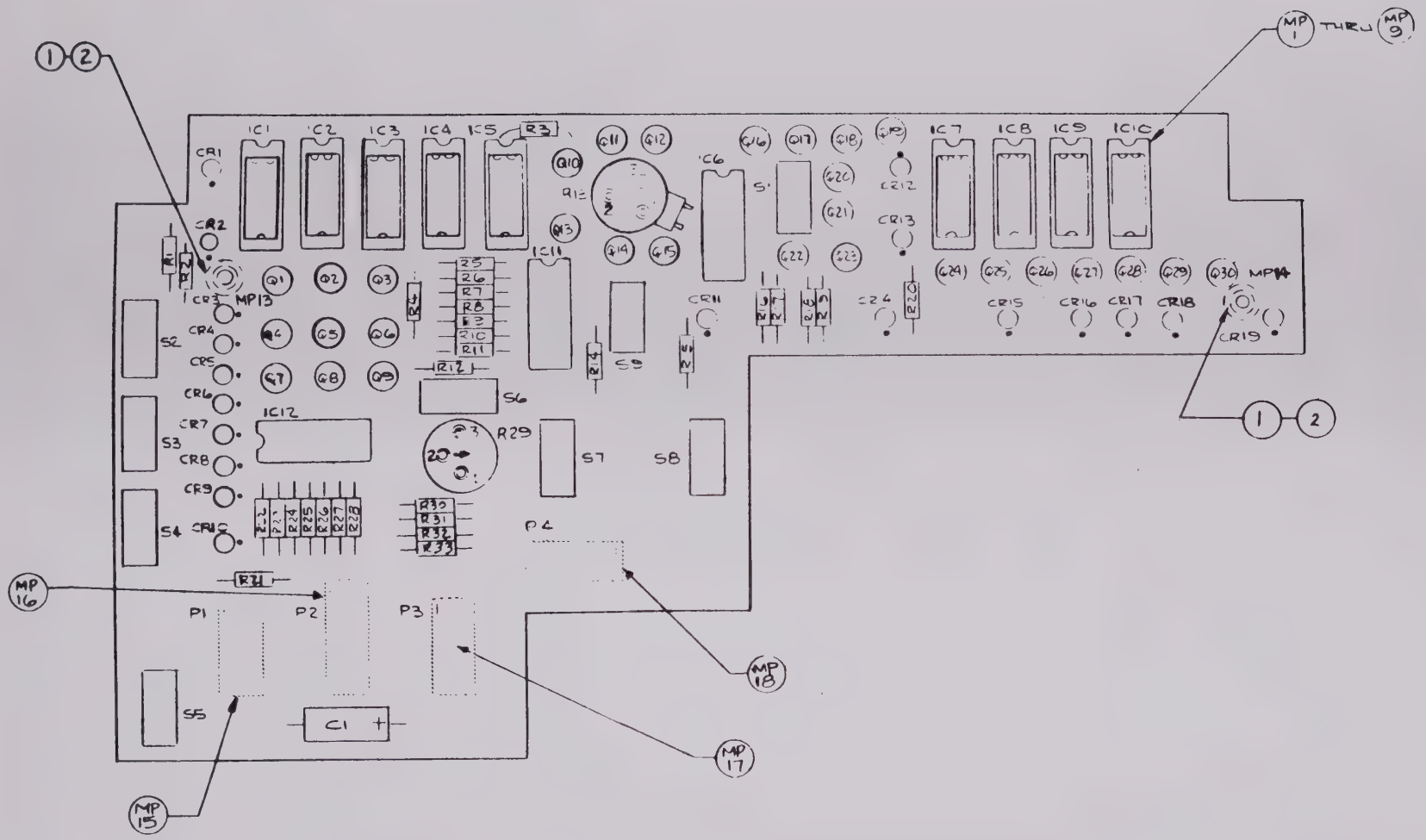

Figure 6-5. Front Panel Display Circuit Card Assembly 1A1A1A1

Fig. & ref no.	Description	Mfr code	Mfr part no.	Halcyon part no.	SMR code
Fig 6-6	TERMINATION CIRCUIT CARD ASSY (See fig 6-4, ref no A2, for nha)	51701		8000-2084-00	PAFZZN
J1	CONNECTOR, Receptacle, electrical, 16 contacts	91506	716-AG2D	2101-0007-00	PAFZZN
PC1	PRINTED WIRING BOARD	51701		1700-2084-00	XAFZZ
R1	RESISTOR, Fixed, film, 909 ohms, 1%, 1/2 w	16299	NA65909R1%	4705-0189-00	XAFZZ
R2	RESISTOR, Fixed, film, 604 ohms, 1%, 1/2 w	16299	NA65604R1%	4705-0172-00	XAFZZ
R3	RESISTOR, Fixed, film, 442 ohms, 1%, 1/2 w	16299	NA65442R1%	4705-0159-00	XAFZZ
R4	Same as R3				
R5	RESISTOR, Fixed, film, 294 ohms, 1%, 1/2 w	16299	NA65294R1%	4705-0142-00	XAFZZ
R6	Same as R5				
S1	SWITCH ASSY, Push button, 4 stations, 1 amp, 300 v, 50 w	51701		5100-0128-00	XAFZZ

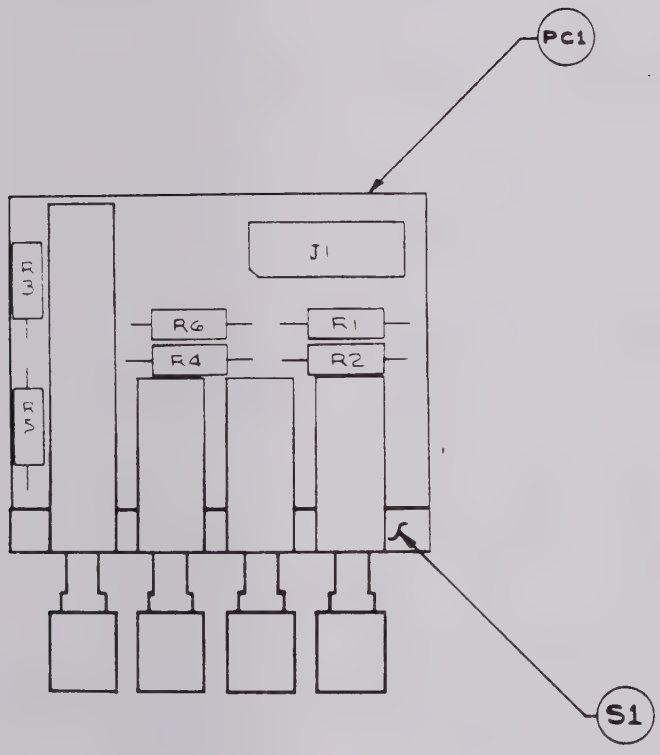

Figure 6-6. Termination Circuit Card Assembly 1A1A1A2

Fig. & ref no.	Description	Mfr code	Mfr part no.	Halcyon part no.	SMR code
Fig. 6-7	INTEGRATION THUMBWHELL CIRCUIT CARD ASSY (See fig. 6-4, ref no A3, for nha)	51701		8000-1021-00	PAFFP
C1	CAPACITOR, Fixed, Electrolytic, 10 uF, -10 +50%, 35 vdcw (Manufactured by Elna America, Inc., 153 E. Savarona Way, Carson City, California 90746)	NONF	35TL10UF	1504-0052-00	PAFZZN
C2	Same as C1				
IC1	INTEGRATED CIRCUIT	04713	MC1458CP1	3131-0005-00	PAFZZN
IC2	Same as IC1				
J1	CONNECTOR, Receptacle, electrical, 14 contacts	91506	714-AG2D	2101-0006-00	PAFZZN
J2	CONNECTOR, Receptacle, electrical, 2 contacts	27264	09-65-1021	2101-0014-02	PAFZZN
L1	COIL, Radio frequency, 3H, 50 ma, 1 kHz	07388	25755	1850-0001-00	PAFZZN
PC1	PRINTED WIRING BOARD	51701		1700-1021-00	XAFZZ
R1	RESISTOR, Fixed, film, 1.58k ohms, 1%, 1/8 w	16299	NA551.58K1%	4703-0212-00	PAFZZN
R2	RESISTOR, Fixed, film, 1.1k ohms, 1%, 1/8 w	16299	NA551.1K1%	4703-0197-00	PAFZZN
R3	RESISTOR, Fixed, film, 23.7k ohms, 1%, 1/8 w	16299	NA5523.7K1%	4703-0325-00	PAFZZN
R4	RESISTOR, Fixed, film, 5.76k ohms, 1%, 1/8 w	16299	NA555.76K1%	4703-0266-00	PAFZZN
R5	RESISTOR, Fixed, film, 5.11k ohms, 1%, 1/8 w	16299	NA555.11K1%	4703-0261-00	PAFZZN
R6	RESISTOR, Fixed, film, 4.53k ohms, 1%, 1/8 w	16299	NA554.53K1%	4703-0256-00	PAFZZN
R7	RESISTOR, Fixed, film, 4.02k ohms, 1%, 1/8 w	16299	NA554.02K1%	4703-0251-00	PAFZZN
R8	RESISTOR, Fixed, film, 3.65k ohms, 1%, 1/8 w	16299	NA553.65K1%	4703-0247-00	PAFZZN
R9	RESISTOR, Fixed, film, 9.09k ohms, 1%, 1/8 w	16299	NA559.09K1%	4703-0285-00	PAFZZN
R10	RESISTOR, Fixed, film, 8.06k ohms, 1%, 1/8 w	16299	NA558.06K1%	4703-0280-00	PAFZZN
R11	RESISTOR, Fixed, film, 7.15k ohms, 1%, 1/8 w	16299	NA557.15K1%	4703-0275-00	PAFZZN
R12	RESISTOR, Fixed, film, 6.49k ohms, 1%, 1/8 w	16299	NA556.49K1%	4703-0271-00	PAFZZN
R13	RESISTOR, Fixed, film, 3.24k ohms, 1%, 1/8 w	16299	NA553.24K1%	4703-0242-00	PAFZZN
R14	RESISTOR, Fixed, film, 2.67k ohms, 1%, 1/8 w	16299	NA552.67K1%	4703-0234-00	PAFZZN
R15	RESISTOR, Fixed, film, 3.01k ohms, 1%, 1/8 w	16299	NA553.01K1%	4703-0239-00	PAFZZN
R16	RESISTOR, Fixed, film, 3.74k ohms, 1%, 1/8 w	16299	NA553.74K1%	4703-0248-00	PAFZZN
R17	Same as R5				
R18	RESISTOR, Fixed, film, 7.32k ohms, 1%, 1/8 w	16299	NA557.32K1%	4703-0276-00	PAFZZN
R19	RESISTOR, Fixed, film, 7.87k ohms, 1%, 1/8 w	16299	NA557.87K1%	4703-0279-00	PAFZZN
R20	Same as R15				
R21	RESISTOR, Fixed, film, 6.04k ohms, 1%, 1/8 w	16299	NA556.04K1%	4703-0268-00	PAFZZN
R22	RESISTOR, Fixed, film, 2k ohms, 1%, 1/8 w	16299	NA552K1%	4703-0222-00	PAFZZN
R23	RESISTOR, Fixed, film, 1.5k ohms, 1%, 1/8 w	16299	NA551.5K1%	4703-0210-00	PAFZZN
R24	RESISOTR, Fixed, film, 12.1k ohms, 1%, 1/8 w	16299	NA5512.1K1%	4703-0297-00	PAFZZN
S1	SWITCH ASSY, Thumbwheel, 6 stations	53985	ISO-1269	5100-0012-00	PAFZZN

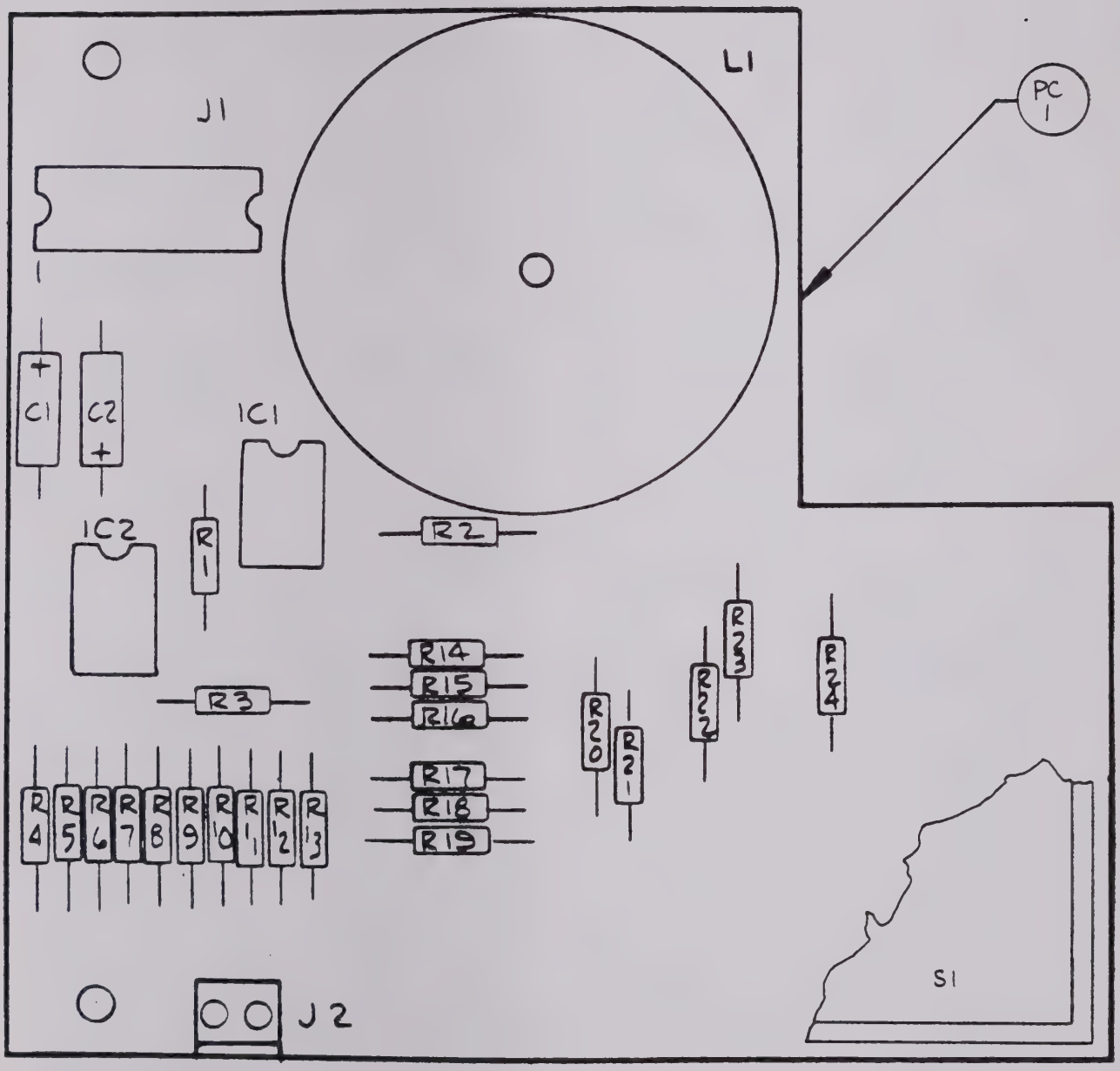

Figure 6-7. Integration Thumbwheel Circuit Card Assembly 1A1A1A3

Fig. & ref no.	Description	Mfr code	Mfr part no.	Halcyon part no.	SMR code
Fig 6-5	PREAMPLIFIER AND MODE SELECT CIRCUIT CARD ASSY (See fig 6-4, ref no A4, for nha)	51701		8000-2086-01	PAFFFP
C1	CAPACITOR, Fixed, mica, 18 pF, 5%, 500 vdcw	00853	D155C180JP	1500-0058-00	PAFZZN
C2	CAPACITOR, Fixed, electrolytic, 100 uF, -0 +100%, 25 vdcw	24138	TAD100TJ25A	1504-0044-00	PAFZZN
C3	CAPACITOR, Fixed, mica, 56 pF, 5%, 500 vdcw	00853	D155C560JP	1500-0071-00	PAFZZN
C4	CAPACITOR, Fixed, plastic, 1 uF, 1%, 200 vdcw	27556	BA2C105F	1502-0037-00	PAFZZN
C5	CAPACITOR, Fixed, mica, 620 pF, 5%, 500 vdcw	00853	D155C621JP	1500-0150-00	PAFZZN
C6	CAPACITOR, Fixed, ceramic, 0.1 uF, 10%, 100 vdcw	81349	CK06BX104K	1501-0074-00	PAFZZN
C7	Same as C6				
C8	CAPACITOR, Fixed, mica, 270 pF, 5%, 500 vdcw	00853	D155C271JP	1500-0141-00	PAFZZN
C9	CAPACITOR, Fixed, ceramic, 0.01 uF, 10%, 200 vdcw	81349	CK06BX103K	1501-0062-00	PAFZZN
IC1	INTEGRATED CIRCUIT	04713	MC1458CP1	3131-0005-00	PAFZZN
IC2	INTEGRATED CIRCUIT	01295	SN72301AL	3131-0001-00	PAFZZN
IC3	Same as IC1				
IC4	INTEGRATED CIRCUIT	01295	SN74193N	3130-0193-00	PAFZZN
IC5	INTEGRATED CIRCUIT	01295	SN74L42N	3130-0542-00	PAFZZN
IC6	INTEGRATED CIRCUIT	01295	SN74L00N	3130-0500-00	PAFZZN
IC7	INTEGRATED CIRCUIT	01295	SN7404N	3130-0004-00	PAFZZN
IC8	Same as IC6				
IC9	INTEGRATED CIRCUIT			3130-0573-00	PAFZZN
J1 thru J3	CONNECTOR, Receptacle, electrical, 14 contacts	91506	714-AG2D	2101-0006-00	PAFZZN
J4 thru J9	CONNECTOR, Receptacle, electrical, 12 contacts	53985	CU400-218	2100-0181-00	PAFZZN
PC1	PRINTED WIRING BOARD	51701		1700-2086-01	XAFZZ
R1	RESISTOR, Fixed, composition, 10k ohms, 5%, 1/4 w	81349	RC07GF103J	4700-0421-00	PAFZZN
R2	RESISTOR, Fixed, composition, 27k ohms, 5%, 1/4 w	81349	RC07GF273J	4700-0431-00	PAFZZN
R3	RESISTOR, Fixed, film, 7.68k ohms, 1%, 1/8 w	16299	NA557.68K1%	4703-0278-00	PAFZZN
R4	RESISTOR, Fixed, film, 2.21k ohms, 1%, 1/8 w	16299	NA552.21K1%	4703-0226-00	PAFZZN
R5	RESISTOR, Fixed, film, 1.37k ohms, 0.1%, 1/8 w	16299	NC551.37K.1%	4702-0277-00	PAFZZN
R6	RESISTOR, Fixed, film, 432 ohms, 0.1%, 1/8 w	16299	NC55432R.1%	4702-0181-00	PAFZZN
R7	RESISTOR, Fixed, film, 137 ohms, 0.1%, 1/8 w	16299	NC55137R.1%	4702-0085-00	PAFZZN
R8	RESISTOR, Fixed, film, 63.4 ohms, 0.1%, 1/8 w	16299	NC5563.4R.1%	4702-0021-00	PAFZZN
R9	RESISTOR, Fixed, film, 22.6k ohms, 1%, 1/8 w	16299	NA5522.6K1%	4703-0323-00	PAFZZN
R10	RESISTOR, Fixed, film, 1k ohms, 1%, 1/8 w	16299	NA551K1%	4703-0193-00	PAFZZN
R11	RESISTOR, Variable, 10k ohms, 20%	73138	72XWR10K	4750-0010-00	PAFZZN
R12	RESISTOR, Fixed, film, 10.2k ohms, 0.1%, 1/8 w	16299	NC5510.2K.1%	4702-0454-00	PAFZZN
R13	RESISTOR, Fixed, film, 9.09k ohms, 0.1%, 1/8 w	16299	NC559.09K.1%	4702-0444-00	PAFZZN
R14	RESISTOR, Fixed, film, 8.06k ohms, 0.1%, 1/8 w	16299	NC558.06K.1%	4702-0434-00	PAFZZN
R15	RESISTOR, Fixed, film, 7.23k ohms, 0.1%, 1/8 w	16299	NC557.23K.1%	4702-0425-00	PAFZZN
R16	RESISTOR, Fixed, film, 6.42k ohms, 0.1%, 1/8 w	16299	NC556.42K.1%	4702-0415-00	PAFZZN
R17	RESISTOR, Fixed, film, 5.76k ohms, 0.1%, 1/8 w	16299	NC555.76K.1%	4702-0406-00	PAFZZN
R18	RESISTOR, Fixed, film, 5.11k ohms, 0.1%, 1/8 w	16299	NC555.11K.1%	4702-0396-00	PAFZZN
R19	RESISTOR, Fixed, film, 4.53k ohms, 0.1%, 1/8 w	16299	NC554.53K.1%	4702-0386-00	PAFZZN
R20	RESISTOR, Fixed, film, 4.07k ohms, 0.1%, 1/8 w	16299	NC554.07K.1%	4702-0377-00	PAFZZN
R21	RESISTOR, Fixed, film, 3.61k ohms, 0.1%, 1/8 w	16299	NC553.61K.1%	4702-0367-00	PAFZZN
R22	Same as R12				
R23	Same as R5				
R24	Same as R6				
R25	Same as R7				

Fig. & ref no.	Description	Mfr code	Mfr part no.	Halcyon part no.	SMR code
Fig 6-8	(Continued)				
R26	Same as R8				
R27	RESISTOR, Fixed, film, 10k ohms, 1%, 1/8 w	16299	NA5510K1%	4703-0289-00	PAFZZN
R28	Same as R4				
R29	Same as R12				
R30	Same as R13				
R31	Same as R14				
R32	Same as R15				
R33	Same as R16				
R34	Same as R17				
R35	Same as R18				
R36	Same as R19				
R37	Same as R20				
R38	Same as R21				
R39	Same as R12				
R40	RESISTOR, Fixed, composition, 22k ohms, 5%, 1/4 w	81349	RC07GF223J	4700-0429-00	PAFZZN
R41	Same as R40				
R42	Same as R1				
R43 thru R46	Same as R40				
R47	Same as R1				
R48 thru R50	Same as R40				
R51	RESISTOR, Fixed, composition, 20k ohms, 5%, 1/4 w	81349	RC07GF203J	4700-0428-00	PAFZZN
R52	RESISTOR, Fixed, film, 7.68k ohms, 1%, 1/8 w	16299	NA557.5K1%	4703-0277-00	PAFZZN
T1	TRANSFORMER, Low delay audio input	51701		5600-0014-00	PAFZZN
T2	TRANSFORMER, Low delay output	15253	1210408	5600-0006-00	PAFZZN
VR1	SEMICONDUCTOR DEVICE, Diode	81349	1N759A	4802-0759-00	PAFZZN
VR2	Same as VR1				
XIC1	SOCKET, Plug-in electronic components, 8 contacts	91506	208-AG39D	2101-0000-00	PAFZZN
XIC2	Same as XIC1				

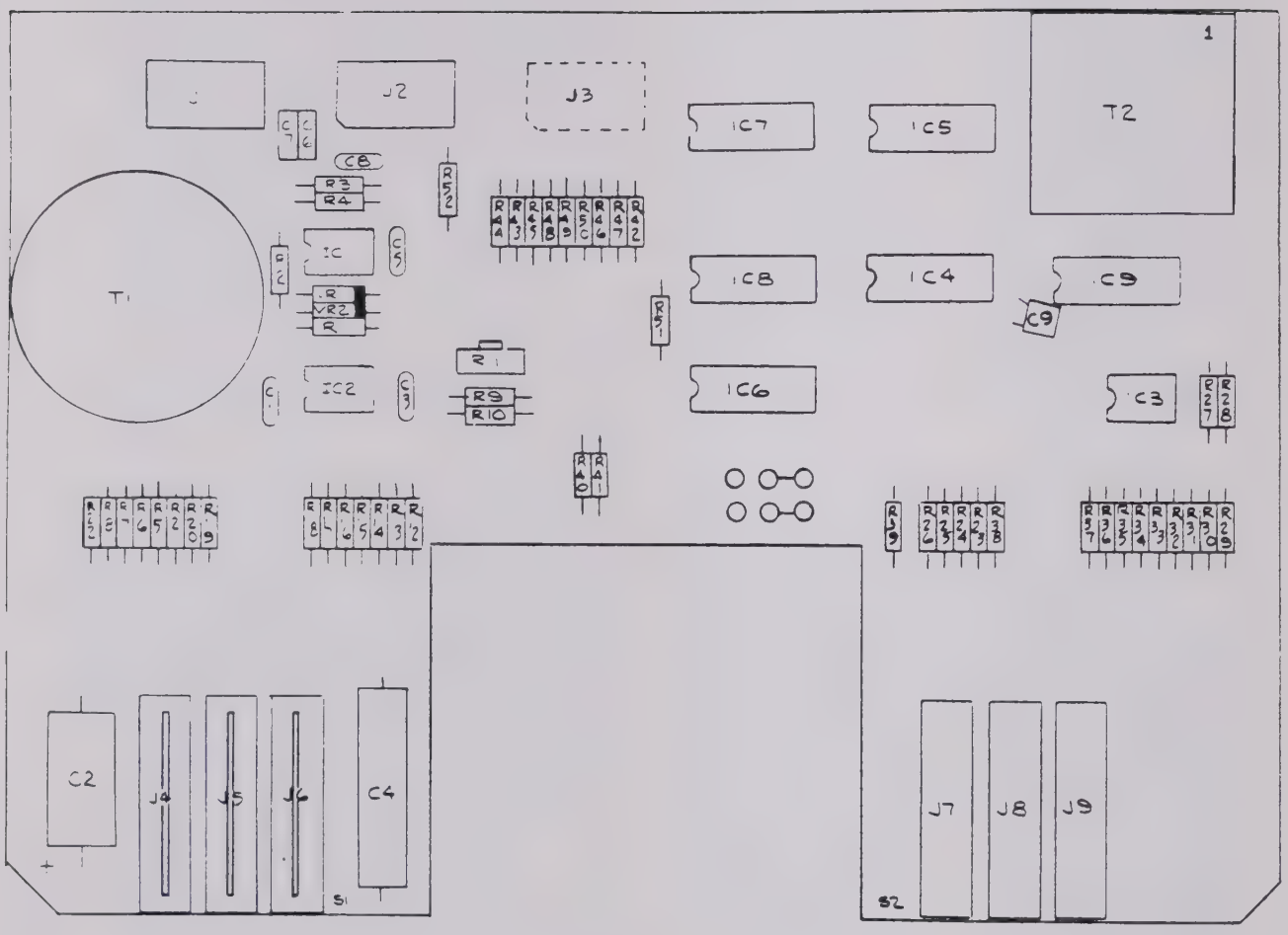

Figure 6-8. Preamplifier and Mode Select Circuit Card Assembly 1A1A1A4

Fig. & ref no.	Description	Mfr code	Mfr part no.	Halcyon part no.	SMR code
Fig. 6-9	VERTICAL INTERCONNECT CIRCUIT CARD ASSY (See fig. 6-4, ref no. A5, for nha)	51701		8000-2117-01	XBFZZ
MP1	HOLDER, Electrical card	23880	1250F	1401-0001-00	XBFZZ
MP2 thru MP7	HOLDER, Electrical card	23880	1450F	1401-0002-00	XBFZZ
P1 thru P3	CONNECTOR, Receptacle, electrical, 14 contacts	91506	714-AG2D	2101-0006-00	PAFZZN
P4	CONNECTOR, Receptacle, electrical, 16 contacts	91506	716-AG2D	2101-0007-00	PAFZZN
P5 thru P7	Same as P1				
P8 thru P10	Not used				
P11	Same as P4				
P12	Not used				
P13	Same as P1				
PC1	PRINTED WIRING BOARD	51701		1700-2117-00	XAFZZ

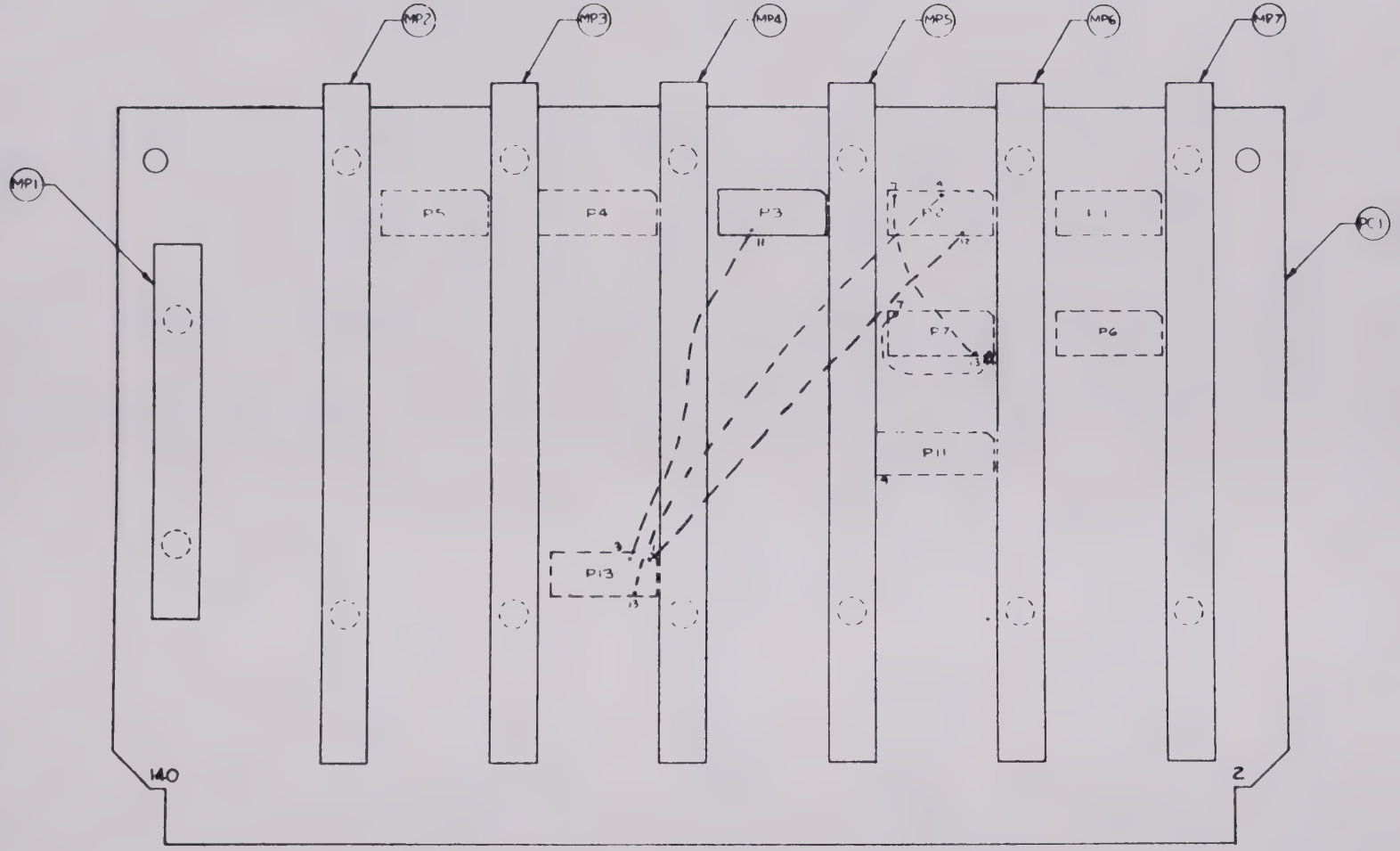

Figure 6-9. Vertical Interconnect Circuit Card Assembly 1A1A1A5

Fig. & ref no.	Description	Mfr code	Mfr part no.	Halcyon part no.	SMR code
Fig. 6-10	REAR PANEL ASSY (See fig. 6-3, ref no. A2, for nha)	51701		8200-0521-04	XBFZZ
J1	CONNECTOR BODY, Plug, electrical, 15 contacts	27264	09-50-3151	2101-0017-15	PAFZZN
J2 thru J5	JACK, Tip, red	83330	205	2100-0100-02	PAFZZN
J6	CONNECTOR, Receptacle, electrical, 24 contacts	71785	57-40240	2100-0212-00	PAFZZN
J7	CONNECTOR BODY, Plug, electrical, 4 contacts	27264	09-50-3041	2101-0017-04	XAFZZ
LS1	SPEAKER, 8 ohms, 20%	57041	U-105	1300-0001-00	PAFZZN
MP1	KNOB	49956	50-2-1G	2401-0054-01	PAFZZN
MP2	NUT, Plain, plate, 5/16-24, steel	78553	C7953-5624	2801-0004-00	PAFZZN
MP3	BRACKET, Speaker mounting	51701		2500-2075-08	XBFZZ
MP4 thru MP22	CONTACT, Electrical	27264	08-50-0106	2101-0017-30	PAFZZN
R1	RESISTOR, Variable, 100k ohms, 20%, 1/2 w	01121	WA2H056S104MA	4751-0054-01	PAFZZN
S1	SWITCH, Toggle, spdt	09353	7101-P3-Y-Z	5100-0201-00	PAFZZN
1	SCREW, Machine, no. 6-32, 1/4 in. lg, pan hd, slot dr, steel, cd pl	96906	MS35223-26	2800-0143-00	XBFZZ
2	NUT, Plain, hexagon, no. 6-32, cres	96906	MS35649-264	2800-0013-00	XBFZZ
3	TERMINAL, Lug	83330	1416-6	2802-0023-00	XBFZZ
4	WASHER, Flat, 0.156 in. ID, 0.375 in. OD, 0.049 in. thk, steel, cd pl	96906	MS27183-6	2800-0033-00	XBFZZ
5	SCREW, Machine, no. 3-48, 1/4 in. lg, binding hd, slot dr, steel, cd pl	51701		2800-0217-00	XBFZZ

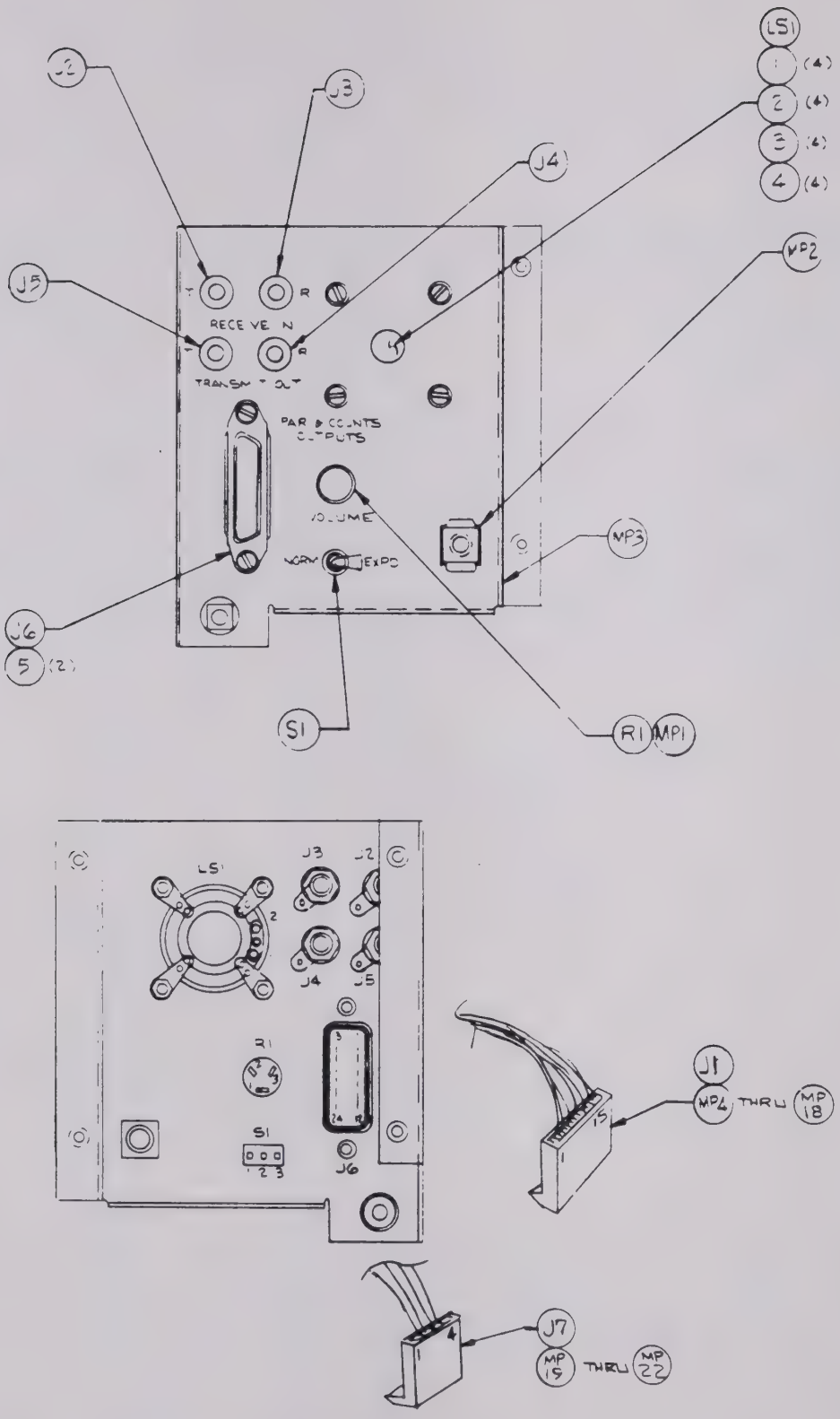

Figure 6-10. Rear Panel Assembly 1A1A2

Fig. & ref no.	Description	Mfr code	Mfr part no.	Halcyon part no.	SMR code
Fig 6-11	INTERCONNECT CIRCUIT CARD ASSY (See fig. 6-3, ref no. A3, for nha)	51701		8000-1018-00	XBFZZ
E1 thru E20	TERMINAL, Stud	88245	2010-B	2103-0004-00	
J1 thru J14	CONNECTOR, Receptacle, electrical, 44 contacts	02660	225-22221-410-117	2100-0125-00	XAFZZ
J15	CONNECTOR, Receptacle, electrical, 140 contacts	55616	VPB01BL01E00A1	2100-0151-00	XAFZZ
P1	Not used				
P2	CONNECTOR, Receptacle, electrical, 10 contacts	27264	09-65-1101	2101-0014-10	XAFZZ
P3	CONNECTOR, Receptacle, electrical, 15 contacts	27264	09-65-1151	2101-0014-15	XAFZZ
P4	Same as P3				
P5	CONNECTOR, Receptacle, electrical, 4 contacts	27264	09-65-1041	2101-0014-04	XAFZZ
P6	Same as P5				
PC1	PRINTED WIRING BOARD	51701		1700-1018-00	XAFZZ
R1	RESISTOR, Fixed, composition, 330 ohms, 5%, 1/4 w	81349	RC07GF331J	4700-0385-00	PAFZZN
S1	SWITCH, Slide, subminiature, spdt	79727	GS111	5100-0040-00	PAFZZN

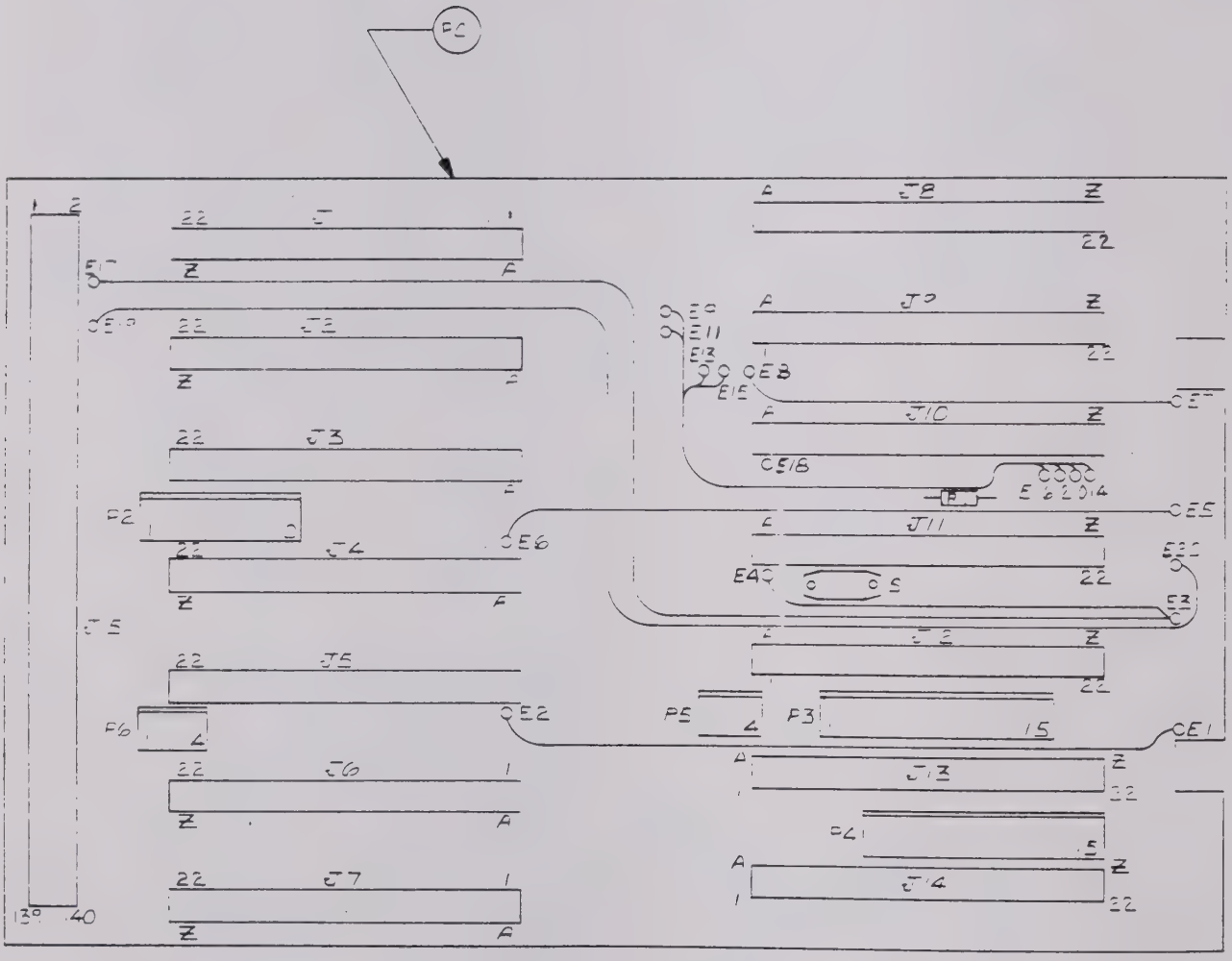

Figure 6-11. Interconnect Circuit Card Assembly 1A1A3

Fig. & ref no.	Description	Mfr code	Mfr part no.	Halcyon part no.	SMR code
Fig. 6-12	REPEAT AND TRANSMIT FUNCTION CIRCUIT CARD ASSY (See fig. 6-2, ref no. A2, for nha)	51701		8000-1041-00	PAFFFP
C1	CAPACITOR, Fixed, mica, 18 pF, 5%, 500 vdcw	00853	D155C180JP	1500-0058-00	PAFZZN
C2	CAPACITOR, Fixed, mica, 56 pF, 5%, 500 vdcw	00853	D155C560JP	1500-0071-00	PAFZZN
C3	CAPACITOR, Fixed, electrolytic, 220 uF, 10%, 10 vdcw	56289	150D227X9010S2	1503-0088-00	PAFZZN
C4	CAPACITOR, Fixed, electrolytic, 100 uF, -0 +100%, 25 vdcw	24138	TAD100TJ25A	1504-0044-00	PAFZZN
C5	CAPACITOR, Fixed, electrolytic, 10 uF, -10 +50%, 35 vdcw (Manufactured by Elna America, Inc., 153 E. Savarona Way, Carson City, California 90746)	NONE	35TL10UF	1504-0052-00	PAFZZN
C6	Same as C5				
C7	Same as C4				
C8	Same as C5				
C9	Same as C5				
C10	Same as C4				
C11	Same as C4				
C12	CAPACITOR, Fixed, mica, 27 pF, 5%, 500 vdcw	00853	D155C270JP	1500-0062-00	PAFZZN
C13	Same as C12				
C14	CAPACITOR, Fixed, plastic, 0.1 uF, 1%, 200 vdcw	27556	BA2C104F	1502-0025-00	PAFZZN
C15	Same as C14				
C16	Same as C12				
C17	Same as C14				
C18	Same as C14				
C19	Same as C12				
C20	CAPACITOR, Fixed, plastic, 0.25 uF, 1%, 200 vdcw	27556	BA2C254F	1502-0046-00	PAFZZN
C21	CAPACITOR, Fixed, plastic, 0.5 uF, 1%, 200 vdcw	27556	BA2C504F	1502-0047-00	PAFZZN
C22	Same as C20				
C23	Same as C20				
C24	Same as C21				
C25	Same as C20				
C26 thru C29	CAPACITOR, Fixed, ceramic, 0.1 uF, 10%, 100 vdcw	81349	CK06BX104K	1501-0074-00	PAFZZN
C30	CAPACITOR, Fixed, plastic, 0.01 uF, 1%, 200 vdcw	27556	BA2C103F	1502-0013-00	PAFZZN
C31	Same as C30				
C32	Same as C14				
C33	Same as C30				
C34	Same as C30				
CR1	SEMICONDUCTOR DEVICE, Diode	81349	1N4148	4802-4148-00	PAFZZN
CR2	Same as CR1				
IC1	INTEGRATED CIRCUIT	01295	SN72301AP	3131-0001-01	PAFZZN
IC2	INTEGRATED CIRCUIT	04713	MC1458CP1	3131-0005-00	PAFZZN
IC3	Same as IC2				
IC4 thru IC7	Same as IC1				
IC8 thru IC11	Same as IC2				
MP1	EXTRACTOR, Electrical card	18677	S-203	1401-0011-00	PAFZZN
MP2	Same as MP1				
PC1	PRINTED WIRING BOARD	51701		1700-1041-00	XAFZZ

Fig. & ref no.	Description	Mfr code	Mfr part no.	Halcyon part no.	SMR code
Fig. 6-12	(Continued)				
Q1 thru Q3	TRANSISTOR	27014	2N3904	4800-3904-00	PAFZZN
Q4	TRANSISTOR	27014	2N3906	4800-3906-00	PAFZZN
Q5	Same as Q1				
R1	RESISTOR, Fixed, film, 3.24k ohms, 1%, 1/8 w	16299	NA553.24K1%	4703-0242-00	PAFZZN
R2	RESISTOR, Fixed, film, 3.01k ohms, 1%, 1/8 w	16299	NA553.01K1%	4703-0239-00	PAFZZN
R3	RESISTOR, Fixed, composition, 100 ohms, 5%, 1/4 w	81349	RC07GF101J	4700-0373-00	PAFZZN
R4	RESISTOR, Variable, 1k ohms, 10%	71450	190PC102A	4750-0027-00	PAFZZN
R5	RESISTOR, Fixed, composition, 220 ohms, 5%, 1/4 w	81349	RC07GF221J	4700-0381-00	PAFZZN
R6	RESISTOR, Fixed, composition, 1k ohms, 5%, 1/4 w	81349	RC07GF102J	4700-0397-00	PAFZZN
R7	RESISTOR, Fixed, composition, 820 ohms, 5%, 1/4 w	81349	RC07GF821J	4700-0395-00	PAFZZN
R8	Not used				
R9	RESISTOR, Fixed, composition, 2.2k ohms, 5%, 1/4 w	81349	RC07GF222J	4700-0405-00	PAFZZN
R10	Same as R3				
R11	RESISTOR, Fixed, composition, 56 ohms, 5%, 1/2 w	81349	RC20GF560J	4700-0667-00	PAFZZN
R12	RESISTOR, Fixed, composition, 82 ohms, 5%, 1/4 w	81349	RC07GF820J	4700-0371-00	PAFZZN
R13	Same as R6				
R14	RESISTOR, Fixed, composition, 3.3k ohms, 5%, 1/4 w	81349	RC07GF332J	4700-0409-00	PAFZZN
R15	Same as R14				
R16	Not used				
R17	Same as R3				
R18	RESISTOR, Fixed, film, 4.99k ohms, 1%, 1/8 w	16299	NA554.99K1%	4703-0260-00	PAFZZN
R19	Same as R3				
R20	Same as R3				
R21	RESISTOR, Fixed, composition, 330 ohms, 5%, 1/4 w	81349	RC07GF331J	4700-0385-00	PAFZZN
R22	RESISTOR, Fixed, film, 9.09k ohms, 1%, 1/8 w	16299	NA559.09K1%	4703-0285-00	PAFZZN
R23	Same as R3				
R24	Same as R9				
R25	Same as R5				
R26	RESISTOR, Fixed, composition, 120 ohms, 5%, 1/4 w	81349	RC07GF121J	4700-0375-00	PAFZZN
R27	Same as R9				
R28	Same as R18				
R29	RESISTOR, Fixed, film, 10k ohms, 1%, 1/8 w	16299	NA5510K1%	4703-0289-00	PAFZZN
R30	Same as R29				
R31	RESISTOR, Fixed, composition, 4.7k ohms, 5%, 1/4 w	81349	RC07GF472J	4700-0413-00	PAFZZN
R32	Same as R3				
R33	Same as R29				
R34	Same as R29				
R35	RESISTOR, Fixed, film, 10.5k ohms, 1%, 1/8 w	16299	NA5510.5K1%	4703-0291-00	PAFZZN
R36	RESISTOR, Fixed, film, 6.98k ohms, 1%, 1/8 w	16299	NA556.98K1%	4703-0274-00	PAFZZN
R37	Same as R29				
R38	RESISTOR, Fixed, film, 12.7k ohms, 1%, 1/8 w	16299	NA5512.7K1%	4703-0299-00	PAFZZN
R39	Same as R35				
R40	RESISTOR, Fixed, film, 14k ohms, 1%, 1/8 w	16299	NA5514K1%	4703-0303-00	PAFZZN
R41	Same as R29				
R42	RESISTOR, Fixed, film, 4.02k ohms, 1%, 1/8 w	16299	NA554.02K1%	4703-0251-00	PAFZZN
R43	Same as R18				
R44	RESISTOR, Variable, 2k ohms, 10%	71450	190PC202A	4750-0028-00	PAFZZN
R45	Same as R18				
R46	RESISTOR, Fixed, composition, 22k ohms, 5%, 1/4 w	81349	RC07GF223J	4700-0429-00	PAFZZN
R47	Same as R46				

Fig. & ref no.	Description	Mfr code	Mfr part no.	Halcyon part no.	SMR code
Fig. 6-12	(Continued)				
R48	Same as R29				
R49	Same as R29				
R50	RESISTOR, Variable, 5k ohms, 10%	71450	190PC502A	4750-0029-00	PAFZZN
R51	Same as R29				
R52	RESISTOR, Fixed, composition, 47k ohms, 5%, 1/4 w	81349	RC07GF473J	4700-0437-00	PAFZZN
R53	Same as R29				
R54	Same as R31				
R55	RESISTOR, Fixed, film, 7.68k ohms, 1%, 1/8 w	16299	NA557.68K1%	4703-0278-00	PAFZZN
R56	Same as R55				
R57	RESISTOR, Fixed, film, 3.57k ohms, 1%, 1/8 w	16299	NA553.57K1%	4703-0246-00	PAFZZN
R58	Same as R9				
R59	Same as R29				
R60	RESISTOR, Fixed, film, 26.1k ohms, 1%, 1/8 w	16299	NA5526.1K1%	4703-0329-00	PAFZZN
R61	Same as R9				
R62	RESISTOR, Fixed, film, 25.5k ohms, 1%, 1/8 w	16299	NA5525.5K1%	4703-0328-00	PAFZZN
R63	Same as R62				
R64	RESISTOR, Fixed, film, 11.8k ohms, 1%, 1/8 w	16299	NA5511.8K1%	4703-0296-00	PAFZZN
R65	Same as R9				
R66	Same as R29				
R67	Same as R60				
R68	Same as R9				
R69	RESISTOR, Fixed, film, 21.5k ohms, 1%, 1/8 w	16299	NA5521.5K1%	4703-0321-00	PAFZZN
R70	Same as R29				
R71	RESISTOR, Fixed, film, 1k ohms, 1%, 1/8 w	16299	NA551K1%	4703-0193-00	PAFZZN
R72	RESISTOR, Fixed, film, 6.04k ohms, 1%, 1/8 w	16299	NA556.04K1%	4703-0268-00	PAFZZN
R73	RESISTOR, Fixed, film, 2.1k ohms, 1%, 1/8 w	16299	NA552.1K1%	4703-0224-00	PAFZZN
R74	RESISTOR, Fixed, film, 78.7k ohms, 1%, 1/8 w	16299	NA5578.7K1%	4703-0375-00	PAFZZN
R75	RESISTOR, Fixed, film, 4.32k ohms, 1%, 1/8 w	16299	NA554.32K1%	4703-0254-00	PAFZZN
R76	Same as R29				
R77	RESISTOR, Fixed, film, 8.06k ohms, 1%, 1/8 w	16299	NA558.06K1%	4703-0280-00	PAFZZN
R78	Same as R74				
R79	RESISTOR, Fixed, film, 5.49k ohms, 1%, 1/8 w	16299	NA555.49K1%	4703-0264-00	PAFZZN
R80	Same as R29				
R81	RESISTOR, Variable, 500 ohms, 20%	73138	72XWR500	4750-0006-00	PAFZZN
R82	RESISTOR, Variable, 2k ohms, 20%	73138	72XWR2K	4750-0008-00	PAFZZN
S1	SWITCH, Slide, spdt	79727	GS111	5100-0040-00	PAFZZN
TP1	JACK, Tip, red	74970	105-0752-001	2100-0002-00	PAFZZN
TP2	JACK, Tip, green	74970	105-0754-001	2100-0004-00	PAFZZN
TP3	JACK, Tip, orange	74970	105-0756-001	2100-0005-00	PAFZZN
TP4	JACK, Tip, yellow	74970	105-0757-001	2100-0006-00	PAFZZN
TP5	JACK, Tip, blue	74970	105-0760-001	2100-0008-00	PAFZZN
VR1	SEMICONDUCTOR DEVICE, Diode	81349	1N759A	4802-0759-00	PAFZZN
VR2	SEMICONDUCTOR DEVICE, Diode	81349	1N757A	4802-0757-00	PAFZZN
XIC1 thru XIC11	SOCKET, Plug-in electronic components, 8 contacts	91506	208-AG39D	2101-0000-00	PAFZZN

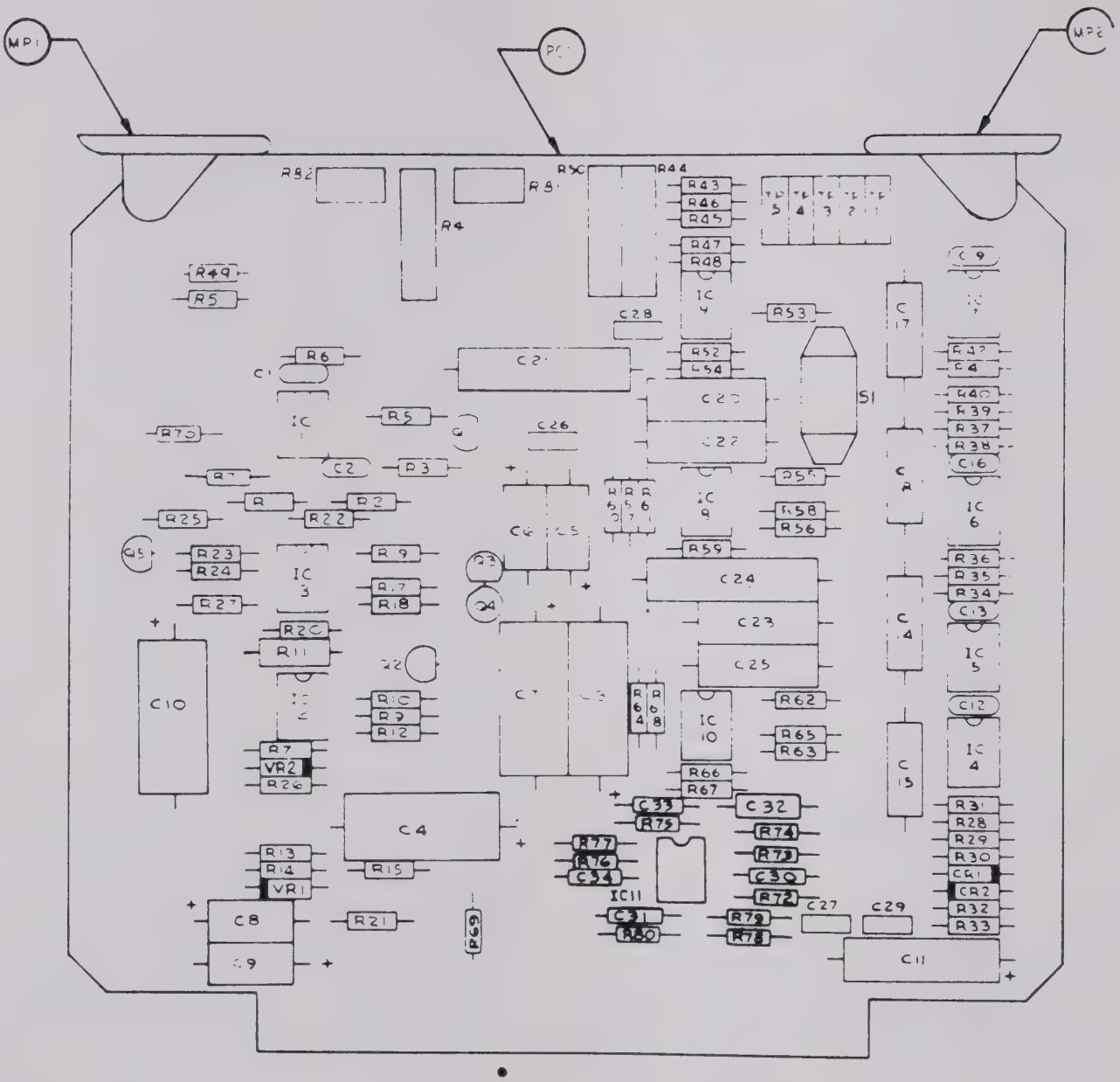

Figure 6-12. Repeat and Transmit Function Circuit Card Assembly 1A2

Fig. & ref no.	Description	Mfr code	Mfr part no.	Halcyon part no.	SMR code
Fig. 6-13	NOISE DETECTOR CIRCUIT CARD ASSY (See fig. 6-2, ref no. A3, for nha)	51701		8000-2089-01	PAFFFP
C1	CAPACITOR, Fixed, mica, 0.01 uF, 1%, 100 vdcw	09023	CD30F103F100	1505-0003-00	PAFZZN
C2	Not used				
C3	Not used				
C4	Same as C1				
C5	Same as C1				
C6	Not used				
C7	Not used				
C8	Same as C1				
C9 thru C11	Not used				
C12	CAPACITOR, Fixed, electrolytic, 47 uF, 20%, 20 vdcw	57185	K47P25	1505-0004-00	PAFZZN
C13	CAPACITOR, Fixed, mica, 270 pF, 5%, 500 vdcw	00853	D155C271JP	1500-0141-00	PAFZZN
C14	CAPACITOR, Fixed, mica, 150 pF, 5%, 500 vdcw	00853	D155C151JP	1500-0081-00	PAFZZN
C15	Same as C12				
C16	CAPACITOR, Fixed, mica, 3000 pF, 1%, 500 vdcw	00853	D195C302FO	1500-5209-00	PAFZZN
C17	Same as C16				
C18	CAPACITOR, Fixed, plastic, 0.25 uF, 1%, 200 vdcw	27556	BA2C254F	1502-0046-00	PAFZZN
C19	CAPACITOR, Fixed, mica, 7500 pF, 1%, 100 vdcw	00853	D191C752FO	1500-5219-00	PAFZZN
C20	CAPACITOR, Fixed, mica, 180 pF, 5%, 500 vdcw	00853	D155C181JP	1500-0136-00	PAFZZN
C21	CAPACITOR, Fixed, plastic, 0.033 uF, 1%, 200 vdcw	27556	BA2C333F	1502-0019-00	PAFZZN
C22	Same as C16				
C23	Same as C16				
C24	CAPACITOR, Fixed, mica, 15 pF, 5%, 500 vdcw	00853	D155C150JP	1500-0057-00	PAFZZN
C25	Same as C14				
C26	CAPACITOR, Fixed, plastic, 0.01 uF, 1%, 200 vdcw	27556	BA2C103F	1502-0013-00	PAFZZN
C27	CAPACITOR, Fixed, plastic, 0.005 uF, 1%, 200 vdcw	27556	BA2C502F	1502-0048-00	PAFZZN
C28	Same as C24				
C29	Same as C14				
C30	CAPACITOR, Fixed, plastic, 1 uF, 1%, 200 vdcw	27556	BA2C105F	1502-0037-00	PAFZZN
C31	Same as C18				
C32	CAPACITOR, Fixed, electrolytic, 100 uF, -0 +100%, 25 vdcw	24138	TAD100TJ25A	1504-0044-00	PAFZZN
C33	CAPACITOR, Fixed, mica, 10 pF, 5%, 500 vdcw	00853	D155C100JP	1500-0055-00	PAFZZN
C34	CAPACITOR, Fixed, plastic, 0.1 uF, 1%, 200 vdcw	27556	BA2C104F	1502-0025-00	PAFZZN
C35 thru C38	CAPACITOR, Fixed, ceramic, 0.1 uF, 10%, 100 vdcw	81349	CK06BX104K	1501-0074-00	PAFZZN
C39	Same as C1				
C40	Same as C1				
CR1 thru CR4	SEMICONDUCTOR DEVICE, Diode	81349	1N4148	4802-4148-00	PAFZZN
CR5	Not used				
CR6	Not used				
CR7	Same as CR1				
CR8	Same as CR1				
E1 thru E4	TERMINAL, Stud	88245	2010-B	2103-0004-00	

Fig. & ref no.	Description	Mfr code	Mfr part no.	Halcyon part no.	SMR code
Fig. 6-13	(Continued)				
IC1	INTEGRATED CIRCUIT	32293	IH5010	3132-0004-01	PAFZZN
IC2	INTEGRATED CIRCUIT	32293	IH5014	3132-0004-02	PAFZZN
IC3	INTEGRATED CIRCUIT	32293	IH5018	3132-0004-03	PAFZZN
IC4	INTEGRATED CIRCUIT	01295	SN72301AP	3131-0001-01	PAFZZN
thru					
IC8					
IC9	INTEGRATED CIRCUIT	04713	MC1458CP1	3131-0005-00	PAFZZN
thru					
IC12					
IC13	Not used				
IC14	Not used				
IC15	Same as IC9				
thru					
IC19					
IC20	INTEGRATED CIRCUIT	01295	TL082P	3131-0008-00	PAFZZN
IC21	Same as IC9				
IC22	Same as IC9				
IC23	INTEGRATED CIRCUIT	04713	MC14011CP	3130-4011-00	PAFZZN
L1	CHOKE, Radio frequency	02114	VK20010/3B	1800-0103-00	PAFZZN
L2	Same as L1				
MP1	EXTRACTOR, Electrical card	18677	S-203	1401-0011-00	PAFZZN
MP2	Same as MP1				
PC1	PRINTED WIRING BOARD	51701		1700-2089-00	XAFZZ
Q1	TRANSISTOR	27014	2N3904	4800-3904-00	PAFZZN
R1	RESISTOR, Fixed, film, 10k ohms, 1%, 1/8 w	16299	NA5510K1%	4703-0289-00	PAFZZN
R2	Same as R1				
R3	RESISTOR, Fixed, film, 14.7k ohms, 1%, 1/8 w	16299	NA5514.7K1%	4703-0305-00	PAFZZN
R4	Same as R1				
R5	RESISTOR, Fixed, film, 787 ohms, 1%, 1/8 w	16299	NA5787R1%	4703-0183-00	PAFZZN
R6	RESISTOR, Fixed, film, 15k ohms, 1%, 1/8 w	16299	NA5515K1%	4703-0306-00	PAFZZN
R7	RESISTOR, Variable, 2k ohms, 10%	71450	190PC202A	4750-0028-00	PAFZZN
R8	RESISTOR, Fixed, composition, 22k ohms, 5%, 1/4 w	81349	RC07GF223J	4700-0429-00	PAFZZN
R9	Not used				
R10	RESISTOR, Fixed, film, 15.4k ohms, 1%, 1/8 w	16299	NA5515.4K1%	4703-0307-00	PAFZZN
R11	Same as R8				
R12	RESISTOR, Fixed, film, 1.65k ohms, 1%, 1/8 w	16299	NA551.65K1%	4703-0214-00	PAFZZN
R13	RESISTOR, Variable, 5k ohms, 10%	71450	190PC502A	4750-0029-00	PAFZZN
R14	Same as R1				
R15	RESISTOR, Fixed, film, 64.9k ohms, 1%, 1/8 w	16299	NA5564.9K1%	4703-0367-00	PAFZZN
R16	Same as R1				
thru					
R18					
R19	Same as R3				
R20	Same as R5				
R21	Same as R1				
R22	Same as R6				
R23	Same as R7				
R24	Same as R1				
R25	Not used				
R26	Same as R10				
R27	Not used				
R28	Same as R12				
R29	Same as R13				

Fig. & ref no.	Description	Mfr code	Mfr part no.	Halcyon part no.	SMR code
Fig. 6-13	(Continued)				
R30	Same as R15				
R31	Not used				
R32	Same as R1				
R33 thru R48	Not used				
R49	RESISTOR, Fixed, film, 34.8k ohms, 1%, 1/8 w	16299	NA5534.8K1%	4703-0341-00	PAFZZN
R50	RESISTOR, Fixed, composition, 100k ohms, 5%, 1/4 w	81349	RC07GF104J	4700-0445-00	PAFZZN
R51	Same as R1				
R52	RESISTOR, Fixed, film, 4.64k ohms, 1%, 1/8w	16299	NA554.64K1%	4703-0257-00	PAFZZN
R53	Same as R1				
R54	RESISTOR, Fixed, film, 38.3k ohms, 1%. 1/8 w	16299	NA5538.3K1%	4703-0345-00	PAFZZN
R55	Same as R8				
R56	RESISTOR, Fixed, film, 86.6k ohms, 1%, 1/8 w	16299	NA5586.6K1%	4703-0379-00	PAFZZN
R57	RESISTOR, Fixed, film, 2.74k ohms, 1%, 1/8 w	16299	NA552.74K1%	4703-0235-00	PAFZZN
R58	RESISTOR, Fixed, film, 43.2k ohms, 1%, 1/8 w	16299	NA5543.2K1%	4703-0350-00	PAFZZN
R59	Same as R8				
R60	Same as R58				
R61	Same as R12				
R62	RESISTOR, Fixed, film, 16.9k ohms, 1%, 1/8 w	16299	NA5516.9K1%	4703-0311-00	PAFZZN
R63	RESISTOR, Fixed, film, 68.1k ohms, 1%, 1/8 w	16299	NA5568.1K1%	4703-0369-00	PAFZZN
R64	Same as R1				
R65	RESISTOR, Fixed, film, 8.87k ohms, 1%, 1/8 w	16299	NA558.87K1%	4703-0284-00	PAFZZN
R66	Not used				
R67	RESISTOR, Fixed, film, 10.7k ohms, 1%, 1/8 w	16299	NA5510.7K1%	4703-0292-00	PAFZZN
R68 thru R70	Same as R1				
R71	RESISTOR, Fixed film, 7.5k ohms, 1%, 1/8 w	16299	NA557.5K1%	4703-0277-00	PAFZZN
R72	Same as R71				
R73	Same as R8				
R74	Same as R65				
R75 thru R78	Same as R1				
R79	RESISTOR, Variable, 2k ohms, 20%	73138	72XWR2K	4750-0008-00	PAFZZN
R80	Same as R71				
R81	RESISTOR, Fixed, film, 33.2k ohms, 1%, 1/8 w	16299	NA5533.2K1%	4703-0339-00	PAFZZN
R82 thru R84	Same as R1				
R85	RESISTOR, Fixed, film, 8.25k ohms, 1%, 1/8 w	16299	NA558.25K1%	4703-0281-00	PAFZZN
R86	RESISTOR, Fixed, film, 5.11k ohms, 1%, 1/8 w	16299	NA555.11K1%	4703-0261-00	PAFZZN
R87	RESISTOR, Fixed, composition 1k ohms, 5%, 1/4 w	81349	RC07GF102J	4700-0397-00	PAFZZN
R88	RESISTOR, Fixed, film, 8.06k ohms, 1%, 1/8 w	16299	NA558.06K1%	4703-0280-00	PAFZZN
R89	Same as R7				
R90	Same as R8				
R91	RESISTOR, Variable, 20k ohms, 10%	71450	190PC203A	4750-0031-00	PAFZZN
R92	Same as R8				
R93	RESISTOR, Fixed, film, 200k ohms, 1%, 1/8 w	16299	NA55200K1%	4703-0414-00	PAFZZN
R94	RESISTOR, Fixed, film, 100k ohms, 1%, 1/8 w	16299	NA55100K1%	4703-0385-00	PAFZZN
R95	Same as R93				

Fig. & ref no.	Description	Mfr code	Mfr part no.	Halcyon part no.	SMR code
Fig 6-13	(Continued)				
R96	Same as R1				
R97	RESISTOR, Fixed, composition, 75k ohms, 5%, 1/4 w	81349	RC07GF753J	4700-0442-00	PAFZZN
R98	RESISTOR, Fixed, film, 24.9k ohms, 1%, 1/8 w	16299	NA5524.9K1%	4703-0327-00	PAFZZN
R99	RESISTOR, Fixed, film, 392 ohms, 1%, 1/8 w	16299	NA55392R1%	4703-0154-00	PAFZZN
R100	Same as R1				
R101	Same as R93				
R102	Same as R52				
R103	RESISTOR, Fixed, film, 1.4k ohms, 1%, 1/8 w	16299	NA551.4K1%	4703-0207-00	PAFZZN
R104	Same as R1				
R105	RESISTOR, Fixed, film, 4.99k ohms, 1%, 1/8 w	16299	NA554.99K1%	4703-0260-00	PAFZZN
R106	Same as R1				
R107	RESISTOR, Fixed, film, 1k ohms, 1%, 1/8 w	16299	NA551K1%	4703-0193-00	PAFZZN
R108	RESISTOR, Fixed, composition, 220k ohms, 5%, 1/4 w	81349	RC07GF224J	4700-0453-00	PAFZZN
R109 thru R111	Same as R1				
R112	Same as R3				
R113	Same as R5				
R114	Same as R6				
R115	Same as R7				
R116	Same as R10				
R117	Same as R13				
R118	Same as R15				
R119	Same as R1				
R120	Same as R12				
R121	Same as R1				
R122	Same as R8				
R123	Same as R8				
R124	RESISTOR, Variable, 20k ohms, 20%	73138	72XWR20K	4750-0011-00	PAFZZN
R125	RESISTOR, Fixed, composition, 270k ohms, 5%, 1/4 w	81349	RC07GF274J	4700-0455-00	PAFZZN
R126	Same as R105				
R127 thru R130	Same as R50				
R131	RESISTOR, Fixed, composition, 33k ohms, 5%, 1/4 w	81349	RC07GF333J	4700-0433-00	PAFZZN
VR1 thru VR4	Not used				
VR5	SEMICONDUCTOR DEVICE, Diode	81349	1N751A	4802-0751-00	PAFZZN
VR6	Same as VR5				
XIC1	SOCKET, Plug-in electronic components, 14 contacts	91506	214-AG39D	2101-0000-01	PAFZZN
XIC2	Same as XIC1				
XIC3 thru XIC12	SOCKET, Plug-in electronic components, 8 contacts	91506	208-AG39D	2101-0000-00	PAFZZN
XIC13	Not used				
XIC14	Not used				
XIC15 thru XIC22	Same as XIC3				
XIC23	Same as XIC1				

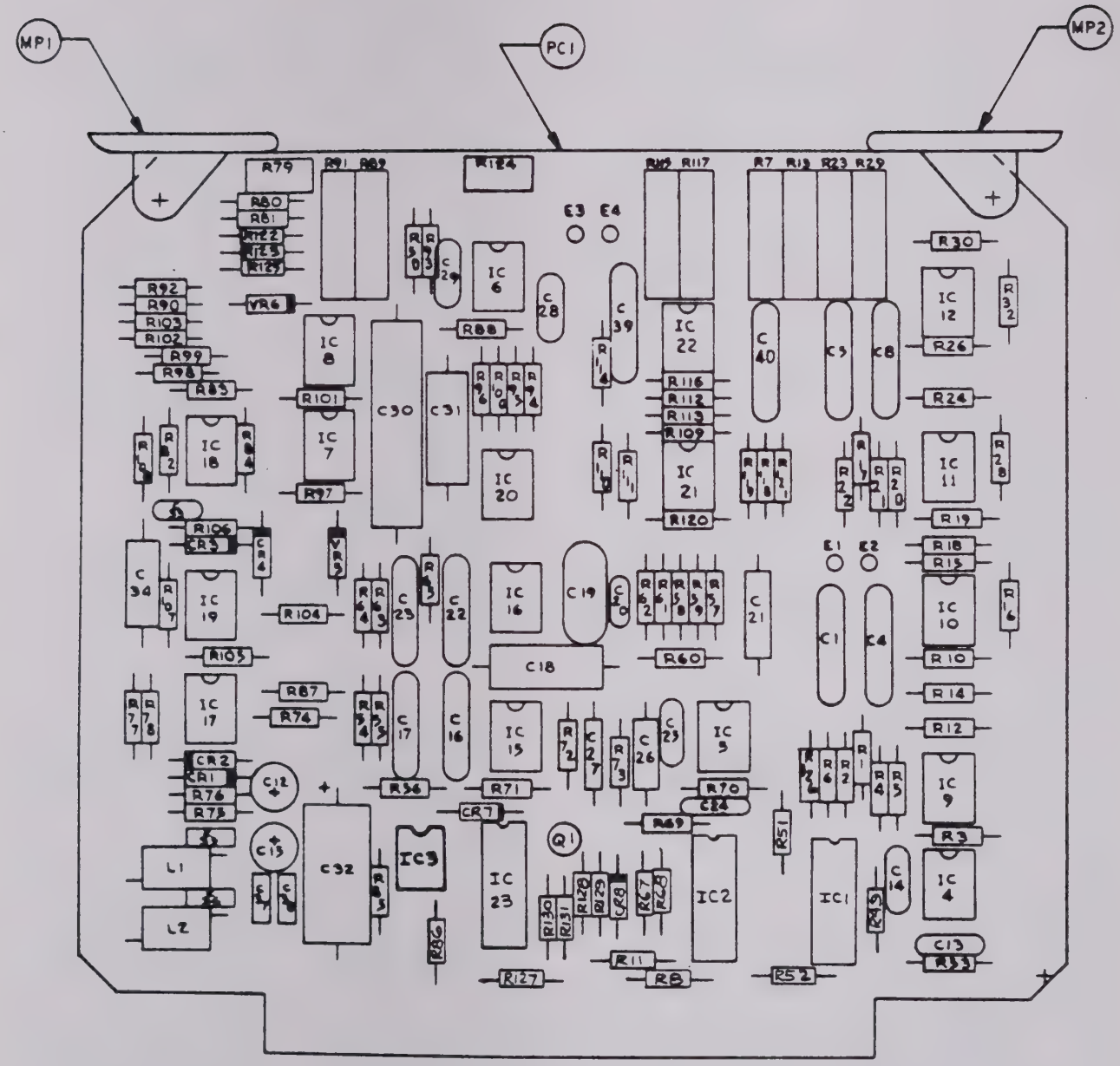

Figure 6-13. Noise Detector Circuit Card Assembly 1A3

Fig. & ref no.	Description	Mfr code	Mfr part no.	Halcyon part no.	SMR code
Fig 6-14	A/D CONVERTER CIRCUIT CARD ASSY (See fig. 6-2, ref no. A4, for nha)	51701		8000-2090-01	PAFFFP
C1	CAPACITOR, Fixed, mica, 7500 pF, 1%, 100 vdcw	00853	D191C752FO	1500-5219-00	PAFZZN
C2	Same as C1				
C3	CAPACITOR, Fixed, mica, 150 pF, 5%, 500 vdcw	00853	D155C151JP	1500-0081-00	PAFZZN
C4	CAPACITOR, Fixed, plastic, 0.005 uF, 1%, 200 vdcw	27556	BA2C502F	1502-0048-00	PAFZZN
C5	CAPACITOR, Fixed, mica, 910 pF, 5%, 500 vdcw	00853	D155C911JP	1500-0155-00	PAFZZN
C6	CAPACITOR, Fixed, mica, 1800 pF, 5%, 300 vdcw	00853	D153C182JP	1500-0203-00	PAFZZN
C7	CAPACITOR, Fixed, electrolytic, 22 uF, 10%, 15 vdcw	56289	150D226X9015B2	1503-0125-00	PAFZZN
C8	Same as C7				
C9	CAPACITOR, Fixed, plastic, 0.1 uF, 1%, 200 vdcw	27556	BA2C104F	1502-0025-00	PAFZZN
C10	Same as C7				
C11	CAPACITOR, Fixed, electrolytic, 1 uF, 10%, 35 vdcw	56289	150D105X9035A2	1503-0229-00	PAFZZN
C12	CAPACITOR, Fixed, plastic, 0.25 uF, 1%, 200 vdcw	27556	BA2C254F	1502-0046-00	PAFZZN
C13	CAPACITOR, Fixed, ceramic, 0.1 uF, 10%, 100 vdcw	81349	CK06BX104K	1501-0074-00	PAFZZN
C14	Same as C13				
C15	CAPACITOR, Fixed, plastic, 1 uF, 1%, 200 vdcw	27556	BA2C105F	1502-0037-00	PAFZZN
C16	CAPACITOR, Fixed, ceramic, 0.47 uF, 10%, 50 vdcw	81349	CK06BX474K	1501-0082-00	PAFZZN
C17	CAPACITOR, Fixed, ceramic, 0.01 uF, 10%, 200 vdcw	81349	CK06BX103K	1501-0062-00	PAFZZN
C18	Same as C17				
C19	CAPACITOR, Fixed, electrolytic, 10 uF, 10%, 20 vdcw	56289	150D106X9020B2	1503-0181-00	PAFZZN
C20 thru C22	Not used				
C23	CAPACITOR, Fixed, mica, 27 pF, 5%, 500 vdcw	00853	D155C270JP	1500-0062-00	PAFZZN
C24	Same as C13				
C25	Same as C13				
C26	CAPACITOR, Fixed, electrolytic, 220 uF, 10%, 10 vdcw	56289	150D227X9010S2	1503-0088-00	PAFZZN
C27	CAPACITOR, Fixed, electrolytic, 47 uF, 20%, 20 vdcw	57185	K47P25	1505-0004-00	PAFZZN
C28	Same as C27				
C29	Same as C13				
C30	Same as C13				
C31	CAPACITOR, Fixed, mica, 5 pF, 5%, 500 vdcw	00853	D155C5R0JP	1500-0054-00	PAFZZN
C32	CAPACITOR, Fixed, mica, 0.001 uF, 5%, 500 vdcw	00853	D155C102JP	1500-0156-00	PAFZZN
C33	CAPACITOR, Fixed, electrolytic, 10 uF, 20%, 15 vdcw	56289	151D116X0015X2	1505-0007-00	PAFZZN
CR1	SEMICONDUCTOR DEVICE, Diode	81349	1N4148	4802-4148-00	PAFZZN
CR2	Not used				
CR3	Not used				
CR4	Same as CR1				
CR5	Same as CR1				
IC1	INTEGRATED CIRCUIT	04713	MC14049CP	3130-4049-00	PAFZZN
IC2	INTEGRATED CIRCUIT	04713	MC14011CP	3130-4011-00	PAFZZN
IC3	INTEGRATED CIRCUIT	04713	MC14001CP	3130-4001-00	PAFZZN
IC4	Not used				
IC5	INTEGRATED CIRCUIT	04713	MC1458CP1	3131-0005-00	PAFZZN
IC6	INTEGRATED CIRCUIT	32293	IH5014	3132-0004-02	PAFZZN
IC7	INTEGRATED CIRCUIT	01295	SN72301AP	3131-0001-01	PAFZZN
IC8	INTEGRATED CIRCUIT	32293	IH5010	3132-0004-01	PAFZZN
IC9	INTEGRATED CIRCUIT	18324	NE567V	3132-0008-00	PAFZZN
IC10 thru IC13	Same as IC7				

Fig. & ref no.	Description	Mfr code	Mfr part no.	Halcyon part no.	SMR code
Fig. 6-14	(Continued)				
IC14 thru IC17	Same as IC5				
IC18	INTEGRATED CIRCUIT	01295	SN72302L	3131-0002-00	PAFZZN
IC19	Same as IC7				
IC20	Same as IC7				
IC21	Same as IC18				
IC22	Same as IC7				
L1	CHOKE, Radio frequency	02114	VK20010/3B	1800-0103-00	PAFZZN
L2	Same as L1				
MP1	EXTRACTOR, Electrical card	18677	S-203	1401-0011-00	PAFZZN
MP2	Same as MP1				
PC1	PRINTED WIRING BOARD	51701		1700-2090-01	XAFZZ
Q1	TRANSISTOR	04713	2N4392	4800-4392-00	PAFZZN
Q2	TRANSISTOR	27014	2N3906	4800-3906-00	PAFZZN
Q3	TRANSISTOR	27014	2N3904	4800-3904-00	PAFZZN
Q4	Same as Q1				
R1	RESISTOR, Fixed, composition, 10k ohms, 5%, 1/4 w	81349	RC07GF103J	4700-0421-00	PAFZZN
R2	Same as R1				
R3	RESISTOR, Fixed, composition, 1k ohms, 5%, 1/4 w	81349	RC07GF102J	4700-0397-00	PAFZZN
R4	Same as R1				
R5	RESISTOR, Fixed, film, 221k ohms, 1%, 1/8 w	16299	NA55221K1%	4703-0418-00	PAFZZN
R6	RESISTOR, Fixed, film, 442k ohms, 1%, 1/8 w	16299	NA55442K1%	4703-0447-00	PAFZZN
R7	RESISTOR, Fixed, film, 1k ohms, 1%, 1/8 w	16299	NA551K1%	4703-0193-00	PAFZZN
R8	RESISTOR, Fixed, film, 162k ohms, 1%, 1/8 w	16299	NA55162K1%	4703-0405-00	PAFZZN
R9	RESISTOR, Fixed, composition, 2.2k ohms, 5%, 1/4 w	81349	RC07GF222J	4700-0405-00	PAFZZN
R10	Same as R8				
R11	RESISTOR, Fixed, film, 187k ohms, 1%, 1/8 w	16299	NA55187K1%	4703-0411-00	PAFZZN
R12	Same as R9				
R13	Same as R11				
R14	RESISTOR, Variable, 2k ohms, 20%	73138	72XWR2K	4750-0008-00	PAFZZN
R15	RESISTOR, Fixed, composition, 100k ohms, 5%, 1/4 w	81349	RC07GF104J	4700-0445-00	PAFZZN
R16	RESISTOR, Fixed, film, 15.4k ohms, 1%, 1/8 w	16299	NA5515.4K1%	4703-0307-00	PAFZZN
R17	RESISTOR, Fixed, film, 15k ohms, 1%, 1/8 w	16299	NA5515K1%	4703-0306-00	PAFZZN
R18	RESISTOR, Fixed, film, 100k ohms, 1%, 1/8 w	16299	NA55100K1%	4703-0385-00	PAFZZN
R19	Same as R15				
R20	RESISTOR, Fixed, film, 31.6k ohms, 1%, 1/8 w	16299	NA5531.6K1%	4703-0337-00	PAFZZN
R21	Same as R15				
R22	RESISTOR, Fixed, film, 2k ohms, 1%, 1/8 w	16299	NA552K1%	4703-0222-00	PAFZZN
R23	Same as R7				
R24	RESISTOR, Fixed, film, 9.76k ohms, 1%, 1/8 w	16299	NA559.76K1%	4703-0288-00	PAFZZN
R25	Same as R14				
R26	RESISTOR, Fixed, film, 47.5k ohms, 1%, 1/8 w	16299	NA5547.5K1%	4703-0354-00	PAFZZN
R27	Same as R14				
R28	Same as R7				
R29	RESISTOR, Fixed, film, 10k ohms, 1%, 1/8 w	16299	NA5510K1%	4703-0289-00	PAFZZN
R30	RESISTOR, Fixed, film, 287k ohms, 1%, 1/8 w	16299	NA55287K1%	4703-0429-00	PAFZZN
R31	Same as R3				
R32	RESISTOR, Fixed, composition, 3.9k ohms, 5%, 1/4 w	81349	RC07GF392J	4700-0411-00	PAFZZN
R33	RESISTOR, Fixed, composition, 22k ohms, 5%, 1/4 w	81349	RC07GF223J	4700-0429-00	PAFZZN
R34 thru R36	Same as R33				

Fig. & ref no.	Description	Mfr code	Mfr part no.	Halcyon part no.	SMR code
Fig 6-14	(Continued)				
R37	Same as R1				
R38	Same as R15				
R39	RESISTOR, Fixed, composition, 6 8k ohms, 5%, 1/4 w	81349	RC07GF682J	4700-0417-00	PAFZZN
R40	RESISTOR, Fixed, composition, 100 ohms, 5%, 1/4 w	81349	RC07GF101J	4700-0373-00	PAFZZN
R41	RESISTOR, Fixed, composition, 1.5 megohms, 5%, 1/4 w	81349	RC07GF155J	4700-0473-00	PAFZZN
R42	Same as R29				
R43	Same as R22				
R44	Same as R1				
R45	RESISTOR, Fixed, film, 8.25k ohms, 1%, 1/8 w	16299	NA558.25K1%	4703-0281-00	PAFZZN
R46	RESISTOR, Variable, 1k ohms, 10%	71450	190PC102A	4750-0027-00	PAFZZN
R47 thru R53	Not used				
R54	Same as R1				
R55	Same as R1				
R56 thru R58	Same as R29				
R59	RESISTOR, Fixed, film, 4.02k ohms, 1%, 1/8 w	16299	NA554.02K1%	4703-0251-00	PAFZZN
R60	Same as R59				
R61	RESISTOR, Fixed, film, 14.3k ohms, 1%, 1/8 w	16299	NA5514.3K1%	4703-0304-00	PAFZZN
R62	Same as R29				
R63	RESISTOR, Fixed, film, 4.75k ohms, 1%, 1/8 w	16299	NA554.75K1%	4703-0258-00	PAFZZN
R64	Same as R63				
R65	Not used				
R66	RESISTOR, Fixed, composition, 33k ohms, 5%, 1/4 w	81349	RC07GF333J	4700-0433-00	PAFZZN
R67	Same as R29				
R68	Same as R15				
R69	Not used				
R70	RESISTOR, Fixed, film, 20k ohms, 1%, 1/8 w	16299	NA5520K1%	4703-0318-00	PAFZZN
R71	Same as R29				
R72	RESISTOR, Fixed, film, 6.98k ohms, 1%, 1/8 w	16299	NA556.98K1%	4703-0274-00	PAFZZN
R73	Same as R9				
R74	Not used				
R75 thru R77	Same as R1				
R78	RESISTOR, Fixed, film, 1.5k ohms, 1%, 1/8 w	16299	NA551.5K1%	4703-0210-00	PAFZZN
R79	RESISTOR, Fixed, film, 5.23k ohms, 1%, 1/8 w	16299	NA555.23K1%	4703-0262-00	PAFZZN
R80	Same as R29				
R81	Same as R22				
R82	RESISTOR, Fixed, film, 1.82k ohms, 1%, 1/8 w	16299	NA551.82K1%	4703-0218-00	PAFZZN
R83	Same as R29				
R84	Same as R15				
TP1	JACK, Tip, blue	74970	105-0760-001	2100-0008-00	PAFZZN
VR1	Not used				
VR2	SEMICONDUCTOR DEVICE, Diode	81349	1N751A	4802-0751-00	PAFZZN
VR3	Same as VR2				
VR4	Not used				
VR5	Not used				
VR6 thru VR10	Same as VR2				

Fig. & ref no.	Description	Mfr code	Mfr part no.	Halcyon part no.	SMR code
Fig 6-14	(Continued)				
XIC1	SOCKET, Plug-in electronic components, 16 contacts	91506	216-AG39D	2101-0000-02	PAFZZN
XIC2	SOCKET, Plug-in electronic components, 14 contacts	91506	214-AG39D	2101-0000-01	PAFZZN
XIC3	Same as XIC2				
XIC4	Not used				
XIC5	SOCKET, Plug-in electronic components, 8 contacts	91506	208-AG39D	2101-0000-00	PAFZZN
XIC6	Same as XIC2				
XIC7	Same as XIC5				
XIC8	Same as XIC2				
XIC9	Same as XIC5				
thru					
XIC17					
XIC18	Not used				
XIC19	Same as XIC5				
XIC20	Same as XIC5				
XIC21	Not used				
XIC22	Same as XIC5				

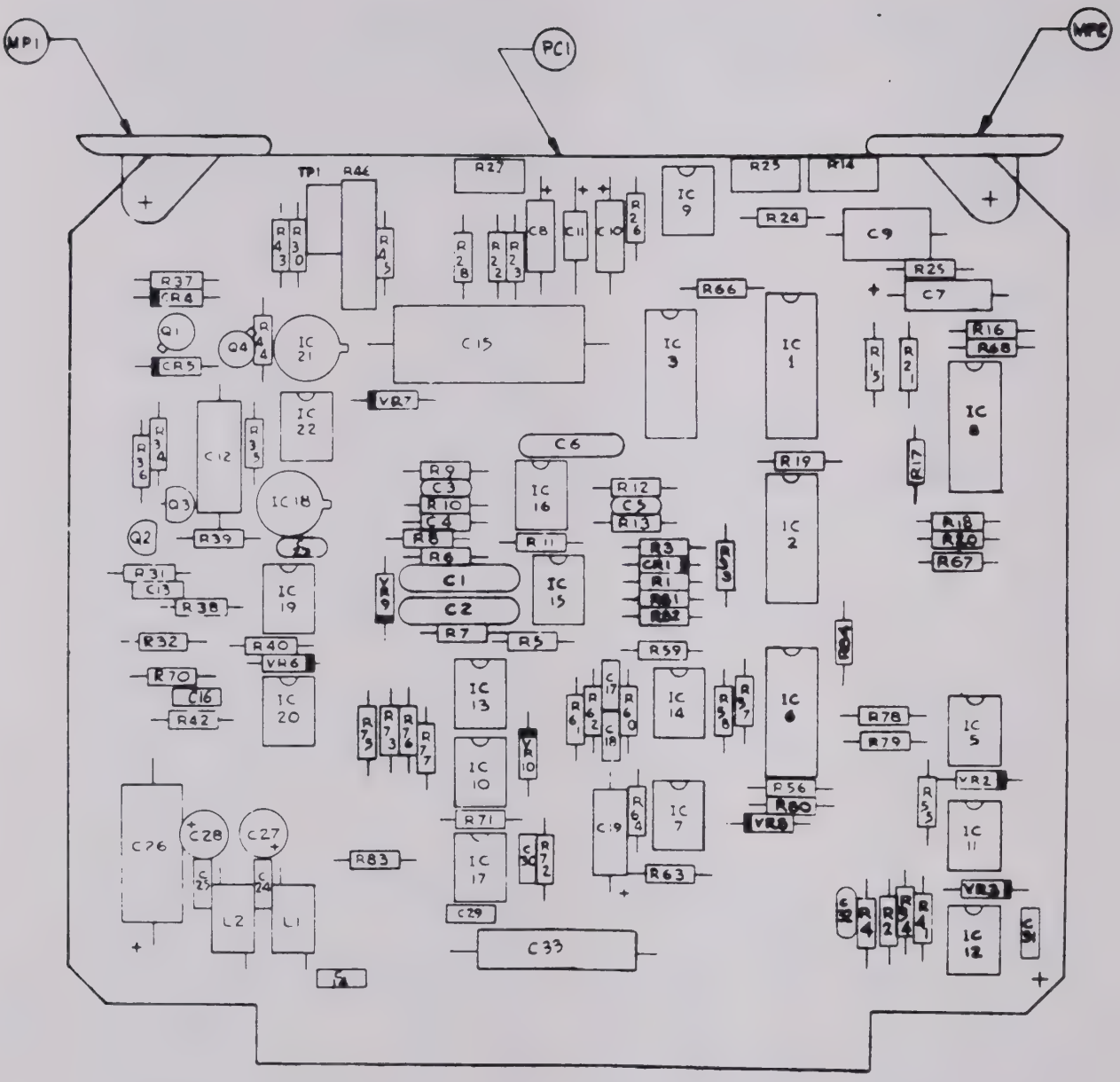

Figure 6-14. A/D Converter Circuit Card Assembly 1A4

Fig. & ref no.	Description	Mfr code	Mfr part no.	Halcyon part no.	SMR code
Fig. 6-15	PHASE JITTER CIRCUIT CARD ASSY (See fig. 6-2, ref no. A5, for nha)	51701		8000-2094-01	PAFFFP
C1 thru C3	CAPACITOR, Fixed, electrolytic, 10 uF -10 +50%, 35 vdcw (Manufactured by Elna America, Inc., 153 E. Savarona Way, Carson City, California 90746)	NONE	35TL10UF	1504-0052-00	PAFZZN
C4	CAPACITOR, Fixed, electrolytic, 100 uF, -0 +100%, 25 vdcw	24138	TAD100TJ25A	1504-0044-00	PAFZZN
C5	Same as C4				
C6	CAPACITOR, Fixed, mica, 4700 pF, 1%, 500 vdcw	00853	D195C472FO	1500-5214-00	PAFZZN
C7	CAPACITOR, Fixed, mica, 220 pF, 1%, 500 vdcw	00853	D155C221FO	1500-5182-00	PAFZZN
C8	CAPACITOR, Fixed, mica, 2200 pF, 1%, 500 vdcw	00853	D195C222FO	1500-5206-00	PAFZZN
C9	CAPACITOR, Fixed, mica, 0.001 uF, 1%, 500 vdcw	00853	D195C102FO	1500-5198-00	PAFZZN
C10	CAPACITOR, Fixed, plastic, 0.01 uF, 1%, 200 vdcw	27556	BA2C103F	1502-0013-00	PAFZZN
C11	Same as C10				
C12	CAPACITOR, Fixed, plastic, 0.002 uF, 2%, 200 vdcw	27556	BA2C202G	1502-0300-02	PAFZZN
C13	Same as C10				
C14	CAPACITOR, Fixed, plastic, 0.1 uF, 1%, 200 vdcw	27556	BA2C104F	1502-0025-00	PAFZZN
C15	Same as C10				
C16	CAPACITOR, Fixed, mica, 6800 pF, 5%, 100 vdcw	00853	D151C682JP	1500-0219-00	PAFZZN
C17	CAPACITOR, Fixed, electrolytic, 10 uF, 10%, 20 vdcw	56289	150D106X9020B2	1503-0181-00	PAFZZN
C18	CAPACITOR, Fixed, mica, 4700 pF, 5%, 300 vdcw	00853	D153C472JP	1500-0214-00	PAFZZN
C19	CAPACITOR, Fixed, electrolytic, 47 uF, 10%, 20 vdcw	56289	150D476X9020R2	1503-0189-00	PAFZZN
C20	Same as C14				
C21	Same as C14				
C22	CAPACITOR, Fixed, plastic, 0.5 uF, 1%, 200 vdcw	27556	BA2C504F	1502-0047-00	PAFZZN
C23	Same as C22				
C24	CAPACITOR, Fixed, mica, 5 pF, 5%, 500 vdcw	00853	D155C5R0JP	1500-0054-00	PAFZZN
C25	CAPACITOR, Fixed, plastic, 0.47 uF, 1%, 200 vdcw	27556	BA2C474F	1502-0033-00	PAFZZN
C26	Same as C24				
C27	Same as C25				
C28	Same as C22				
C29	CAPACITOR, Fixed, plastic, 0.25 uF, 1%, 200 vdcw	27556	BA2C254F	1502-0046-00	PAFZZN
C30	CAPACITOR, Fixed, mica, 330 pF, 5%, 500 vdcw	00853	D155C331JP	1500-0143-00	PAFZZN
C31	Same as C30				
CR1	Not used				
CR2 thru CR8	SEMICONDUCTOR DEVICE, Diode	81349	1N4148	4802-4148-00	PAFZZN
MP1	EXTRACTOR, Electrical card	18677	S-203	1401-0011-00	PAFZZN
MP2	Same as MP1				
PC1	PRINTED WIRING BOARD	51701		1700-2094-01	XAFZZ
Q1	TRANSISTOR	27014	2N3904	4800-3904-00	PAFZZN
Q2	Same as Q1				
Q3	TRANSISTOR	27014	2N3906	4800-3906-00	PAFZZN
Q4	Same as Q1				
Q5	TRANSISTOR	04713	2N4351	4800-4351-00	PAFZZN
R1	RESISTOR, Variable, 50k ohms, 10%	71450	190PC503A	4750-0032-00	PAFZZN
R2	RESISTOR, Variable, 5k ohms, 10%	71450	190PC502A	4750-0029-00	PAFZZN
R3 thru R5	RESISTOR, Variable, 20k ohms, 10%	71450	190PC203A	4750-0031-00	PAFZZN
R6	Same as R2				
R7	Same as R3				

Fig. & ref no.	Description	Mfr code	Mfr part no.	Halcyon part no.	SMR code
Fig. 6-15	(Continued)				
R8	RESISTOR, Variable, 2k ohms, 10%	71450	190PC202A	4750-0028-00	PAFZZN
R9	RESISTOR, Fixed, film, 73.2k ohms, 1%, 1/8 w	16299	NA5573.2K1%	4703-0372-00	PAFZZN
R10	RESISTOR, Fixed, film, 147k ohms, 1%, 1/8 w	16299	NA55147K1%	4703-0401-00	PAFZZN
R11	RESISTOR, Fixed, film, 59k ohms, 1%, 1/8 w	16299	NA5559K1%	4703-0363-00	PAFZZN
R12	RESISTOR, Fixed, film, 187k ohms, 1%, 1/8 w	16299	NA55187K1%	4703-0411-00	PAFZZN
R13	RESISTOR, Fixed, film, 26.7k ohms, 1%, 1/8 w	16299	NA5526.7K1%	4703-0330-00	PAFZZN
R14	RESISTOR, Fixed, film, 63.4k ohms, 1%, 1/8 w	16299	NA5563.4K1%	4703-0366-00	PAFZZN
R15	RESISTOR, Fixed, composition, 10k ohms, 5%, 1/4 w	81349	RC07GF103J	4700-0421-00	PAFZZN
R16	RESISTOR, Fixed, composition, 8.2 megohms, 5%, 1/4 w	81349	RC07GF825J	4700-0491-00	PAFZZN
R17	RESISTOR, Fixed, composition, 20k ohms, 5%, 1/4 w	81349	RC07GF203J	4700-0428-00	PAFZZN
R18	RESISTOR, Fixed, composition, 100k ohms, 5%, 1/4 w	81349	RC07GF104J	4700-0445-00	PAFZZN
R19	Same as R9				
R20	Same as R9				
R21	RESISTOR, Fixed, film, 196k ohms, 1%, 1/8 w	16299	NA55196K1%	4703-0413-00	PAFZZN
R22	RESISTOR, Fixed, film, 48.7k ohms, 1%, 1/8 w	16299	NA5548.7K1%	4703-0355-00	PAFZZN
R23	RESISTOR, Fixed, film, 12.7k ohms, 1%, 1/8 w	16299	NA5512.7K1%	4703-0299-00	PAFZZN
R24	Same as R23				
R25	Same as R22				
R26	Same as R22				
R27	RESISTOR, Fixed, film, 1 megohm, 1%, 1/8 w	16299	NA551M1%	4703-0481-00	PAFZZN
R28	RESISTOR, Fixed, film, 2.21k ohms, 1%, 1/8 w	16299	NA552.21K1%	4703-0226-00	PAFZZN
R29	RESISTOR, Fixed, film, 90.9k ohms, 1%, 1/8 w	16299	NA5590.9K1%	4703-0381-00	PAFZZN
R30	RESISTOR, Fixed, film, 49.9k ohms, 1%, 1/8 w	16299	NA5549.9K1%	4703-0356-00	PAFZZN
R31	RESISTOR, Fixed, film, 27.4k ohms, 1%, 1/8 w	16299	NA5527.4K1%	4703-0331-00	PAFZZN
R32	Same as R15				
R33	RESISTOR, Fixed, film, 47.5k ohms, 1%, 1/8 w	16299	NA5547.5K1%	4703-0354-00	PAFZZN
R34	Same as R33				
R35	RESISTOR, Fixed, composition, 180 ohms, 5%, 1/4 w	81349	RC07GF181J	4700-0379-00	PAFZZN
R36	Same as R15				
R37	RESISTOR, Fixed, composition, 470 ohms, 5%, 1/4 w	81349	RC07GF471J	4700-0389-00	PAFZZN
R38	RESISTOR, Fixed, composition, 22k ohms, 5%, 1/4 w	81349	RC07GF223J	4700-0429-00	PAFZZN
R39	Same as R38				
R40	RESISTOR, Fixed, composition, 47k ohms, 5%, 1/4 w	81349	RC07GF473J	4700-0437-00	PAFZZN
R41	RESISTOR, Fixed, film, 237k ohms, 1%, 1/8 w	16299	NA55237K1%	4703-0421-00	PAFZZN
R42	RESISTOR, Fixed, film, 10k ohms, 1%, 1/8 w	16299	NA5510K1%	4703-0289-00	PAFZZN
R43	RESISTOR, Fixed, film, 84.5k ohms, 1%, 1/8 w	16299	NA5584.5K1%	4703-0378-00	PAFZZN
R44	RESISTOR, Fixed, film, 3.24k ohms, 1%, 1/8 w	16299	NA553.24K1%	4703-0242-00	PAFZZN
R45	RESISTOR, Fixed, film, 261k ohms, 1% 1/8 w	16299	NA55261K1%	4703-0425-00	PAFZZN
R46	Same as R38				
R47	Same as R38				
R48	Same as R40				
R49	RESISTOR, Fixed, film, 95.3k ohms, 1%, 1/8 w	16299	NA5595.3K1%	4703-0383-00	PAFZZN
R50 thru R52	Same as R42				
R53	Same as R44				
R54	Not used				
R55	Same as R18				
R56	RESISTOR, Fixed, film, 11k ohms, 1%, 1/8 w	16299	NA5511K1%	4703-0293-00	PAFZZN
R57	RESISTOR, Fixed, composition, 560k ohms, 5%, 1/4 w	81349	RC07GF564J	4700-0463-00	PAFZZN
R58	Same as R18				
R59	Same as R42				
R60	Same as R42				

Fig. & ref no.	Description	Mfr code	Mfr part no.	Halcyon part no.	SMR code
Fig. 6-15	(Continued)				
R61	RESISTOR, Fixed, film, 4.99k ohms, 1%, 1/8 w	16299	NA554.99K1%	4703-0260-00	PAFZZN
R62 thru R64	Same as R42				
R65	RESISTOR, Fixed, film, 100k ohms, 1%, 1/8 w	16299	NA55100K1%	4703-0385-00	PAFZZN
R66	RESISTOR, Fixed, composition, 1 megohm, 5%, 1/4 w	81349	RC07GF105J	4700-0469-00	PAFZZN
R67	Same as R65				
R68	Same as R66				
R69 thru R72	Same as R42				
R73	Same as R66				
R74	Same as R66				
R75	Same as R15				
R76	Same as R15				
R77	RESISTOR, Fixed, film, 2.87k ohms, 1%, 1/8 w	16299	NA552.87K1%	4703-0237-00	PAFZZN
R78	RESISTOR, Fixed, film, 13.7k ohms, 1%, 1/8 w	16299	NA5513.7K1%	4703-0302-00	PAFZZN
R79	RESISTOR, Variable, 250k ohms, 20%	73138	72XWR250K	4750-0016-00	PAFZZN
R80 thru R84	Not used				
R85	Same as R18				
R86	RESISTOR, Fixed, composition, 3.9k ohms, 5%, 1/4 w	81349	RC07GF392J	4700-0411-00	PAFZZN
R87	RESISTOR, Fixed, composition, 1k ohms, 5%, 1/4 w	81349	RC07GF102J	4700-0397-00	PAFZZN
R88	RESISTOR, Fixed, composition, 6.8k ohms, 5%, 1/4 w	81349	RC07GF682J	4700-0417-00	PAFZZN
R89	Same as R17				
R90	Same as R17				
R91	Same as R65				
TP1 thru TP4	TERMINAL, Stud	88245	2010-B	2103-0004-00	
U1	INTEGRATED CIRCUIT	01295	TL082P	3131-0008-00	PAFZZN
U2	INTEGRATED CIRCUIT	04713	MC14070BP	3130-4070-00	PAFZZN
U3	Same as U1				
U4	INTEGRATED CIRCUIT	27014	LM3900N	3131-0009-00	PAFZZN
U5	INTEGRATED CIRCUIT	04713	MC1458CP1	3131-0005-00	PAFZZN
U6	INTEGRATED CIRCUIT	27014	LM311N	3131-0311-00	PAFZZN
U7	Not used				
U8	Same as U5				
U9	Same as U5				
U10	Same as U1				
U11	Same as U5				
U12	Same as U5				
U13	Same as U1				
U14	INTEGRATED CIRCUIT	32293	IH5014	3132-0004-02	PAFZZN
U15	Same as U5				
U16	INTEGRATED CIRCUIT	01295	SN72301AP	3131-0001-01	PAFZZN
VR1	SEMICONDUCTOR DEVICE, Diode	04713	1N943A	4802-0943-00	PAFZZN
VR2	Not used				
VR3	Not used				
VR4	SEMICONDUCTOR DEVICE, Diode	81349	1N751A	4802-0751-00	PAFZZN
XU1	SOCKET, Plug-in electronic components, 8 contacts	91506	208-AG39D	2101-0000-00	PAFZZN
XU2	SOCKET, Plug-in electronic components, 14 contacts	91506	214-AG39D	2101-0000-01	PAFZZN

Fig. & ref no.	Description	Mfr code	Mfr part no.	Halcyon part no.	SMR code
Fig. 6-15	(Continued)				
XU3	Same as XU1				
XU4	Same as XU2				
XU5	Same as XU1				
XU6	Same as XU1				
XU7	Not used				
XU8 thru XU13	Same as XU1				
XU14	Same as XU2				
XU15	Same as XU1				
XU16	Same as XU1				

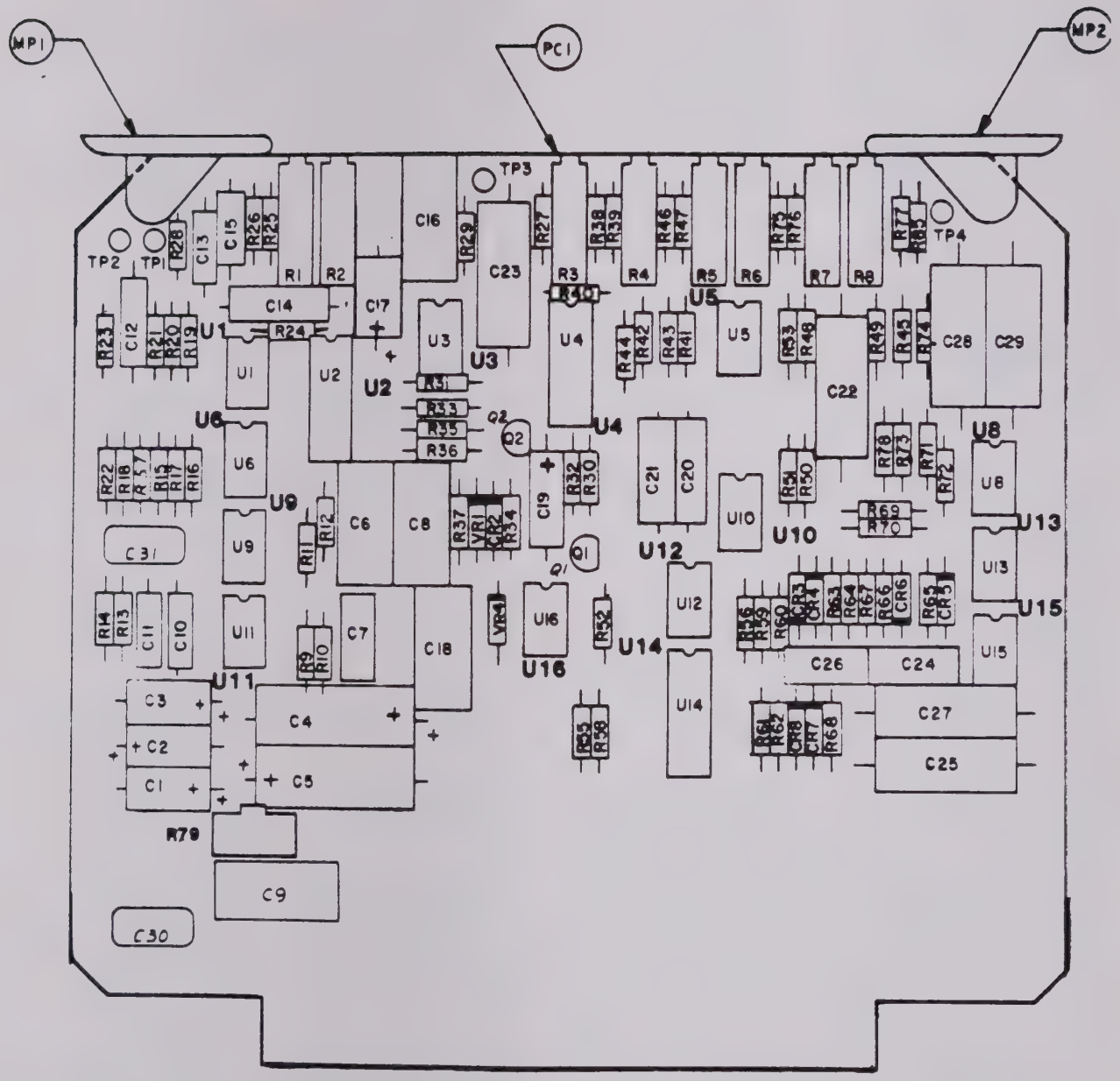

Figure 6-15. Phase Jitter Circuit Card Assembly 1A5

Fig. & ref no.	Description	Mfr code	Mfr part no.	Halcyon part no.	SMR code
Fig 6-16	PHASE AGC CIRCUIT CARD ASSY (See fig. 6-2, ref no. A6, for nha)	51701		8000-0020-02	PAFFFP
C1 thru C3	CAPACITOR, Fixed, electrolytic, 100 uF, 10%, 20 vdcw	56289	150D107X9020S2	1503-0193-00	PAFZZN
C4	CAPACITOR, Fixed, plastic, 0.1 uF, 1%, 200 vdcw	27556	BA2C104F	1502-0025-00	PAFZZN
C5	Same as C4				
C6	CAPACITOR, Fixed, mica, 3 pF, 5%, 500 vdcw	00853	D155C3R0JP	1500-0053-00	PAFZZN
C7	CAPACITOR, Fixed, plastic, 0.25 uF, 1%, 200 vdcw	27556	BA2C254F	1502-0046-00	PAFZZN
C8	CAPACITOR, Fixed, plastic, 0.5 uF, 1%, 200 vdcw	27556	BA2C504F	1502-0047-00	PAFZZN
C9	Same as C7				
C10	Same as C7				
C11	Same as C8				
C12	Same as C7				
C13	Same as C7				
C14	Same as C8				
C15	Same as C7				
C16	CAPACITOR, Fixed, electrolytic, 100 uF, -0 +100%, 25 vdcw	24138	TAD100TJ25A	1504-0044-00	PAFZZN
C17 thru C37	CAPACITOR, Fixed, ceramic, 0.1 uF, 10%, 100 vdcw	81349	CK06BX104K	1501-0074-00	PAFZZN
C38	CAPACITOR, Fixed, mica, 10 pF, 5%, 500 vdcw	00853	D155C100JP	1500-0055-00	PAFZZN
C39 thru C43	Not used				
C44 thru C46	Same as C4				
C47	Not used				
C48	Same as C4				
C49	CAPACITOR, Fixed, electrolytic, 10 uF, 20%, 15 vdcw	56289	151D116X0015X2	1505-0007-00	PAFZZN
CR1 thru CR3	SEMICONDUCTOR DEVICE, Diode	81349	1N4148	4802-4148-00	PAFZZN
E1 thru E4	TERMINAL, Stud	88245	2010-B	2103-0004-00	
IC1 thru IC5	INTEGRATED CIRCUIT	04713	MC1458CP1	3131-0005-00	PAFZZN
IC6	INTEGRATED CIRCUIT	01295	SN72301AL	3131-0001-00	PAFZZN
IC7	Same as IC6				
IC8	Same as IC1				
IC9	Same as IC1				
IC10	Same as IC6				
L1 thru L3	CHOKE, Radio frequency	02114	VK20010/3B	1800-0103-00	PAFZZN
MP1	EXTRACTOR, Electrical card	18677	S-203	1401-0011-00	PAFZZN
MP2	Same as MP1				
PC1	PRINTED WIRING BOARD	51701		1700-0020-00	XAFZZ
Q1	Not used				

Fig. & ref no.	Description	Mfr code	Mfr part no.	Halcyon part no.	SMR code
Fig. 6-16	(Continued)				
Q2	Not used				
Q3	TRANSISTOR	27014	2N3904	4800-3904-00	PAFZZN
R1	RESISTOR, Fixed, film, 10k ohms, 1%, 1/8 w	16299	NA5510K1%	4703-0289-00	PAFZZN
R2	RESISTOR, Fixed, film, 1.1k ohms, 1%, 1/8 w	16299	NA551.1K1%	4703-0197-00	PAFZZN
R3	RESISTOR, Fixed, composition, 2.2k ohms, 5%, 1/4 w	81349	RC07GF222J	4700-0405-00	PAFZZN
R4	RESISTOR, Fixed, film, 1.5k ohms, 1%, 1/8 w	16299	NA551.5K1%	4703-0210-00	PAFZZN
R5	Same as R4				
R6	RESISTOR, Fixed, film, 464k ohms, 1%, 1/8 w	16299	NA55464K1%	4703-0449-00	PAFZZN
R7	Same as R1				
R8	RESISTOR, Fixed, composition, 4.7k ohms, 5%, 1/4 w	81349	RC07GF472J	4700-0413-00	PAFZZN
R9	Same as R1				
R10	Same as R1				
R11	RESISTOR, Fixed, composition, 100 ohms, 5%, 1/4 w	81349	RC07GF101J	4700-0373-00	PAFZZN
R12	Same as R1				
R13	Same as R1				
R14	RESISTOR, Fixed, film, 15.8k ohms, 1%, 1/8 w	16299	NA5515.8K1%	4703-0308-00	PAFZZN
R15	Same as R14				
R16	RESISTOR, Fixed, composition, 22k ohms, 5%, 1/4 w	81349	RC07GF223J	4700-0429-00	PAFZZN
R17	Same as R11				
R18	Not used				
R19	Same as R11				
R20	RESISTOR, Fixed, film, 7.68k ohms, 1%, 1/8 w	16299	NA557.68K1%	4703-0278-00	PAFZZN
R21	Same as R20				
R22	RESISTOR, Fixed, film, 3.83k ohms, 1%, 1/8 w	16299	NA553.83K1%	4703-0249-00	PAFZZN
R23	Same as R3				
R24	Same as R1				
R25	RESISTOR, Fixed, film, 26.1k ohms, 1%, 1/8 w	16299	NA5526.1K1%	4703-0329-00	PAFZZN
R26	Same as R3				
R27	RESISTOR, Fixed, film, 15.4k ohms, 1%, 1/8 w	16299	NA5515.4K1%	4703-0307-00	PAFZZN
R28	Same as R27				
R29	Same as R20				
R30	Same as R3				
R31	Same as R1				
R32	RESISTOR, Fixed composition, 180 ohms, 5%, 1/4 w	81349	RC07GF181J	4700-0379-00	PAFZZN
R33	Same as R25				
R34	Same as R3				
R35	RESISTOR, Fixed, film, 25.5k ohms, 1%, 1/8 w	16299	NA5525.5K1%	4703-0328-00	PAFZZN
R36	Same as R35				
R37	RESISTOR, Fixed, film, 12.7k ohms, 1%, 1/8 w	16299	NA5512.7K1%	4703-0299-00	PAFZZN
R38	Same as R3				
R39	Same as R1				
R40	Same as R1				
R41	Same as R3				
R42	Same as R8				
R43	Same as R16				
R44	RESISTOR, Fixed, film, 14k ohms, 1%, 1/8 w	16299	NA5514K1%	4703-0303-00	PAFZZN
R45	RESISTOR, Fixed, film, 866 ohms, 1%, 1/8 w	16299	NA55866R1%	4703-0187-00	PAFZZN
R46	Not used				
R47	RESISTOR, Fixed, composition, 3.9k ohms, 5%, 1/4 w	81349	RC07GF392J	4700-0411-00	PAFZZN
R48 thru R65	Same as R11				
R66	RESISTOR, Fixed, film, 20k ohms, 1%, 1/8 w	16299	NA5520K1%	4703-0318-00	PAFZZN

Fig. & ref no.	Description	Mfr code	Mfr part no.	Halcyon part no.	SMR code
Fig. 6-16	(Continued)				
R67	Same as R1				
R68	RESISTOR, Fixed, film, 5.49k ohms, 1%, 1/8 w	16299	NA555.49K1%	4703-0264-00	PAFZZN
R69	Same as R66				
R70	RESISTOR, Fixed, film, 4.02k ohms, 1%, 1/8 w	16299	NA554.02K1%	4703-0251-00	PAFZZN
R71	Same as R47				
R72	RESISTOR, Fixed, film, 18.2k ohms, 1%, 1/8 w	16299	NA5518.2K1%	4703-0314-00	PAFZZN
R73	Same as R1				
R74	RESISTOR, Fixed, film, 5.36k ohms, 1%, 1/8 w	16299	NA555.36K1%	4703-0263-00	PAFZZN
R75	Same as R72				
R76	Same as R72				
R77	RESISTOR, Fixed, composition, 3.3k ohms, 5%, 1/4 w	81349	RC07GF332J	4700-0409-00	PAFZZN
R78	Same as R8				
R79	Same as R8				
R80	LIGHT EMITTING DIODE	03911	CLM6000	3700-0007-01	PAFZZN
R81	Same as R11				
R82	Same as R11				
R83	RESISTOR, Fixed, composition, 10k ohms, 5%, 1/4 w	81349	RC07GF103J	4700-0421-00	PAFZZN
R84	Same as R3				
TP1	JACK, Tip, brown	74970	105-0758-001	2100-0007-00	PAFZZN
TP2	JACK, Tip, red	74970	105-0752-001	2100-0002-00	PAFZZN
TP3	JACK, Tip, orange	74970	105-0756-001	2100-0005-00	PAFZZN
TP4	JACK, Tip, yellow	74970	105-0757-001	2100-0006-00	PAFZZN
TP5	JACK, Tip, green	74970	105-0754-001	2100-0004-00	PAFZZN
TP6	JACK, Tip, blue	74970	105-0760-001	2100-0008-00	PAFZZN
TP7	JACK, Tip, violet	74970	105-0762-001	2100-0009-00	PAFZZN
XIC1 thru XIC5	SOCKET, Plug-in electronic components, 8 contacts	91506	208-AG39D	2101-0000-00	PAFZZN
XIC6	Not used				
XIC7	Not used				
XIC8	Same as XIC1				
XIC9	Same as XIC1				
XIC10	Not used				
VR1 thru VR3	Not used				
VR4	SEMICONDUCTOR DEVICE, Diode	81349	1N751A	4802-0751-00	PAFZZN

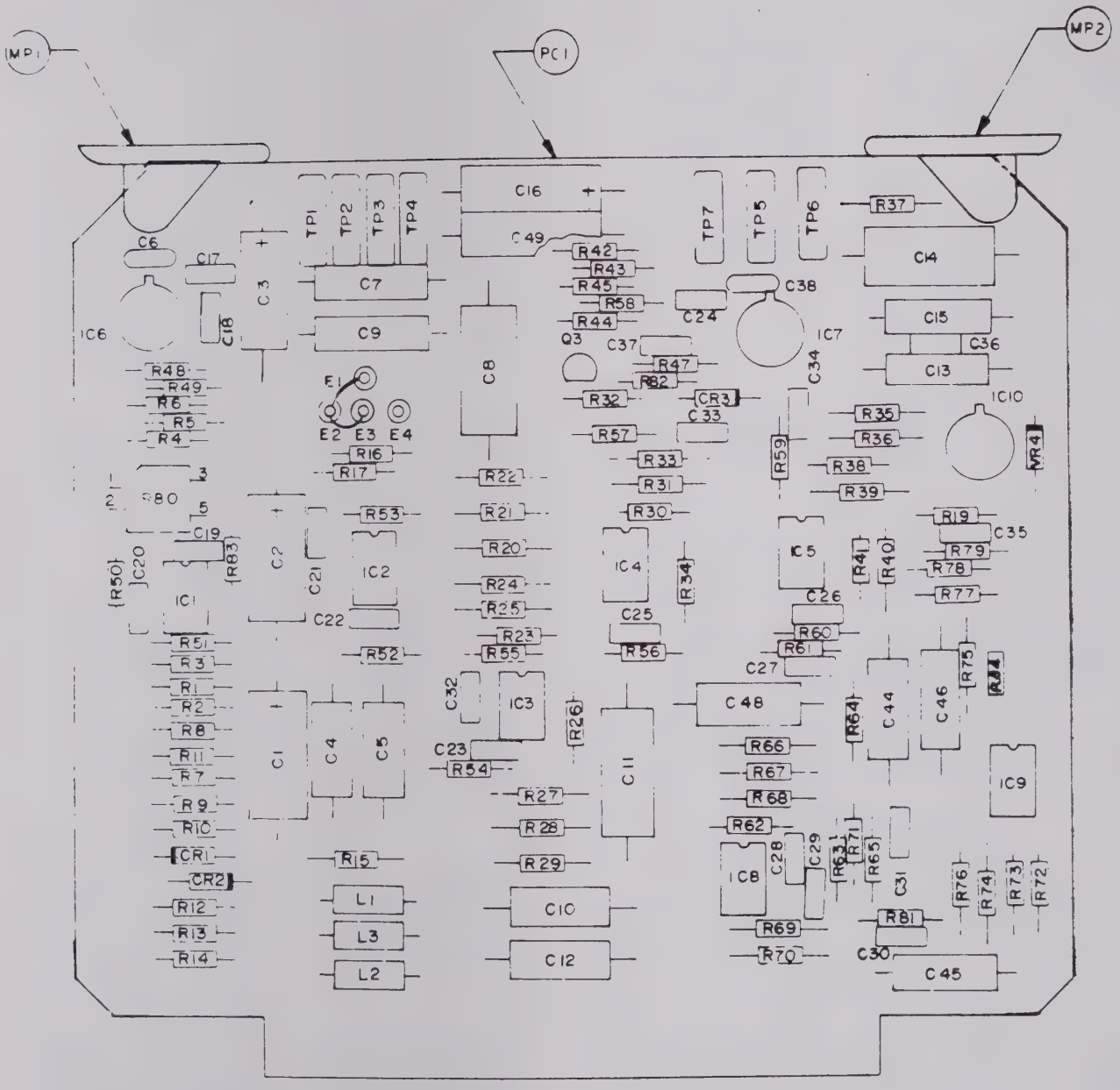

Figure 6-16. Phase AGC Circuit Card Assembly 1A6

Fig. & ref no.	Description	Mfr code	Mfr part no.	Halcyon part no.	SMR code
Fig. 6-17	NONLINEAR DISTORTION CIRCUIT CARD ASSY (See fig. 6-2, ref no. A7, for nha)	51701		8000-0104-00	PAFFFP
C1	CAPACITOR, Fixed, electrolytic, 10 uF, -10 +50%, 35 vdcw (Manufactured by Elna America, Inc., 153 E. Savarona Way, Carson City, California 90746)	NONE	35TL10UF	1504-0052-00	PALZZN
C2	Same as C1				
C3 thru C22	CAPACITOR, Fixed, mica, 0.001 uF, 1%, 100 vdcw	14655	CD15FA102F03	1505-0008-00	PAFZZN
C23	Not used				
C24	CAPACITOR, Fixed, mica, 0.01 uF, 1%, 100 vdcw	09023	CD30F103F100	1505-0003-00	PAFZZN
C25	Same as C24				
C26	CAPACITOR, Fixed, mica, 7500 pF, 1%, 100 vdcw	00853	D191C752FO	1500-5219-00	PAFZZN
C27	Same as C26				
C28	Same as C3				
C29	CAPACITOR, Fixed, mica, 510 pF, 5%, 500 vdcw	00853	D155C511JP	1500-0149-00	PAFZZN
C30	Same as C1				
C31	Same as C3				
C32	Same as C29				
IC1 thru IC15	INTLGRATED CIRCUIT	04713	MC1458CP1	3131-0005-00	PAFZZN
IC16	INTEGRATED CIRCUIT	32293	IH5018	3132-0004-03	PAFZZN
IC17 thru IC19	Same as IC1				
IC20	Same as IC16				
MP1	EXTRACTOR, Electrical card	18677	S-203	1401-0011-00	PAFZZN
MP2	Same as MP1				
PC1	PRINTED WIRING BOARD	51701		1700-0104-00	XAFZZ
Q1	TRANSISTOR	27014	2N3904	4800-3904-00	PAFZZN
Q2	Same as Q1				
R1 thru R3	RESISTOR, Variable, 50k ohms, 10%	71450	190PC503A	4750-0032-00	PAFZZN
R4 thru R10	RESISTOR, Variable, 2k ohms, 10%	71450	190PC202A	4750-0028-00	PAFZZN
R11	RESISTOR, Fixed, film, 931 ohms, 1%, 1/8 w	16299	NA55931R1%	4703-0190-00	PAFZZN
R12 thru R14	RESISTOR, Fixed, film, 365k ohms, 1%, 1/4 w	16299	NA60365K1%	4704-0439-00	PAFZZN
R15	RESISTOR, Variable, 500 ohms, 10%	71450	190PC501A	4750-0026-00	PAFZZN
R16	Not used				
R17	RESISTOR, Fixed, film, 392k ohms, 1%, 1/4 w	16299	NA60392K1%	4704-0442-00	PAFZZN
R18	RESISTOR, Fixed film, 100k ohms, 1%, 1/8 w	16299	NA55100K1%	4703-0385-00	PAFZZN
R19	RESISTOR, Fixed, film, 1 megohm, 1%, 1/4 w	16299	NA601M1%	4704-0481-00	PAFZZN
R20	RESISTOR, Fixed, film, 61.9k ohms, 1%, 1/8 w	16299	NA5561.9K1%	4703-0365-00	PAFZZN
R21	RESISTOR, Fixed, film, 133k ohms, 1%, 1/8 w	16299	NA55133K1%	4703-0397-00	PAFZZN
R22	RESISTOR, Fixed, film, 619 ohms, 1%, 1/8 w	16299	NA55619R1%	4703-0173-00	PAFZZN
R23	RESISTOR, Fixed, film, 309 ohms, 1%, 1/8 w	16299	NA55309R1%	4703-0144-00	PAFZZN
R24	RESISTOR, Fixed, film, 243k ohms, 1%, 1/8 w	16299	NA55243K1%	4703-0422-00	PAFZZN
R25	Same as R20				

Fig. & ref no.	Description	Mfr code	Mfr part no.	Halcyon part no.	SMR code
Fig. 6-17	(Continued)				
R26	Same as R18				
R27	Same as R21				
R28	RESISTOR, Variable, 250k ohms, 20%	73138	72XWR250K	4750-0016-00	PAFZZN
R29	RESISTOR, Fixed, film, 357k ohms, 1%, 1/8 w	16299	NA55357K1%	4703-0438-00	PAFZZN
R30	RESISTOR, Fixed, film, 324k ohms, 1%, 1/8 w	16299	NA55324K1%	4703-0434-00	PAFZZN
R31	Same as R28				
R32	Same as R18				
R33	Same as R24				
R34	Same as R20				
R35	Same as R21				
R36	RESISTOR, Fixed, film, 2.49k ohms, 1%, 1/8 w	16299	NA552.49K1%	4703-0231-00	PAFZZN
R37	Same as R18				
R38	Same as R23				
R39	Not used				
R40	Same as R20				
R41	Same as R18				
R42	Same as R21				
R43	RESISTOR, Fixed, film, 28k ohms, 1%, 1/8 w	16299	NA5528K1%	4703-0332-00	PAFZZN
R44	RESISTOR, Variable, 100k ohms, 20%	73138	72XWR100K	4750-0014-00	PAFZZN
R45	Same as R43				
R46	Same as R18				
R47	Same as R20				
R48	Same as R21				
R49	RESISTOR, Fixed, film, 2.55k ohms, 1%, 1/8 w	16299	NA552.55K1%	4703-0232-00	PAFZZN
R50	Same as R36				
R51	Same as R20				
R52	RESISTOR, Variable, 20k ohms, 20%	73138	72XWR20K	4750-0011-00	PAFZZN
R53	RESISTOR, Fixed, film, 150k ohms, 1%, 1/8 w	16299	NA55150K1%	4703-0402-00	PAFZZN
R54	Same as R21				
R55	Same as R18				
R56	RESISTOR, Fixed, film, 25.5k ohms, 1%, 1/8 w	16299	NA5525.5K1%	4703-0328-00	PAFZZN
R57	Same as R52				
R58	Same as R56				
R59	Same as R18				
R60	Same as R20				
R61	Same as R21				
R62	RESISTOR, Fixed, film, 1.24k ohms, 1%, 1/8 w	16299	NA551.24K1%	4703-0202-00	PAFZZN
R63	RESISTOR, Fixed, film, 24.9k ohms, 1%, 1/8 w	16299	NA5524.9K1%	4703-0327-00	PAFZZN
R64	Same as R49				
R65	Same as R20				
R66	Same as R18				
R67	Same as R21				
R68	Same as R17				
R69	Not used				
R70	RESISTOR, Fixed, film, 20.5k ohms, 1%, 1/8 w	16299	NA5520.5K1%	4703-0319-00	PAFZZN
R71	Same as R63				
R72	Same as R44				
R73	RESISTOR, Fixed, film, 19.1k ohms, 1%, 1/8 w	16299	NA5519.1K1%	4703-0316-00	PAFZZN
R74	Same as R18				
R75	Same as R20				
R76	Same as R21				
R77	Same as R62				

Fig. & ref no.	Description	Mfr code	Mfr part no.	Halcyon part no.	SMR code
Fig 6-17	(Continued)				
R78	Same as R36				
R79	Same as R20				
R80	Same as R18				
R81	Same as R52				
R82	Same as R21				
R83	RESISTOR, Fixed, film, 17.8k ohms, 1%, 1.8 w	16299	NA5517.8K1%	4703-0313-00	PAFZZN
R84	RESISTOR, Fixed, film, 5.49k ohms, 1%, 1/8 w	16299	NA555.49K1%	4703-0264-00	PAFZZN
R85	RESISTOR, Fixed, film, 78.7k ohms, 1%, 1/8 w	16299	NA5578.7K1%	4703-0375-00	PAFZZN
R86	RESISTOR, Fixed, film, 56.2k ohms, 1%, 1/8 w	16299	NA5556.2K1%	4703-0361-00	PAFZZN
R87	RESISTOR, Fixed, film, 13k ohms, 1%, 1/8 w	16299	NA5513K1%	4703-0300-00	PAFZZN
R88	RESISTOR, Fixed, film, 3.48k ohms, 1%, 1/8 w	16299	NA553.48K1%	4703-0245-00	PAFZZN
R89	RESISTOR, Fixed, film, 10k ohms, 1%, 1/8 w	16299	NA5510K1%	4703-0289-00	PAFZZN
R90	RESISTOR, Fixed, composition, 47k ohms, 5%, 1/4 w	81349	RC07GF473J	4700-0437-00	PAFZZN
R91	RESISTOR, Fixed, composition, 2.2k ohms, 5%, 1/4 w	81349	RC07GF222J	4700-0405-00	PAFZZN
R92	Same as R90				
R93	RESISTOR, Fixed, composition, 150 ohms, 5%, 1/2 w	81349	RC20GF151J	4700-0677-00	PAFZZN
R94 thru R96	RESISTOR, Fixed, film, 215k ohms, 1%, 1/8 w	16299	NA55215K1%	4703-0417-00	PAFZZN
R97	RESISTOR, Fixed, film, 1.1k ohms, 1%, 1/8 w	16299	NA551.1K1%	4703-0197-00	PAFZZN
R98	RESISTOR, Fixed, film, 22k ohms, 5%, 1/4 w	81349	RC07GF223J	4700-0429-00	PAFZZN
R99	Same as R89				
R100	RESISTOR, Fixed, film, 1.82k ohms, 1%, 1/8 w	16299	NA551.82K1	4703-0218-00	PAFZZN
R101	Same as R63				
R102	Same as R89				
R103	Same as R90				
R104	Same as R90				
R105	RESISTOR, Fixed, film, 90.9k ohms, 1%, 1/8 w	16299	NA5590.9K1%	4703-0381-00	PAFZZN
R106	Same as R105				
R107	RESISTOR, Fixed, film, 127k ohms, 1%, 1/8 w	16299	NA55127K1%	4703-0395-00	PAFZZN
R108	Same as R107				
RP1 thru RP5	RESISTOR NETWORK	51701		4710-0001-00	PAFZZN
S1	SWITCH ASSY, Rocker	23880	1004-692	5100-5151-00	PAFZZN
S2	Same as S1				
TP1	JACK, Tip, red	74970	105-0752-001	2100-0002-00	PAFZZN
TP2	JACK, Tip, brown	74970	105-0758-001	2100-0007-00	PAFZZN
VR1	SEMICONDUCTOR DEVICE, Diode	81349	1N758A	4802-0758-00	PAFZZN
XIC1 thru XIC20	SOCKET, Plug-in electronic components, 8 contacts	91506	208-AG39D	2101-0000-00	PAFZZN
Y1	OSCILLATOR, Crystal, 857 Hz	07388	OS-00319	2300-2000-00	PAFZZN
Y2	OSCILLATOR, Crystal, 863 Hz	07388	OS-00320	2300-2000-01	PAFZZN
Y3	OSCILLATOR, Crystal, 1372 Hz	07388	OS-00321	2300-2000-02	PAFZZN
Y4	OSCILLATOR, Crystal, 1388 Hz	07388	OS-00322	2300-2000-03	PAFZZN

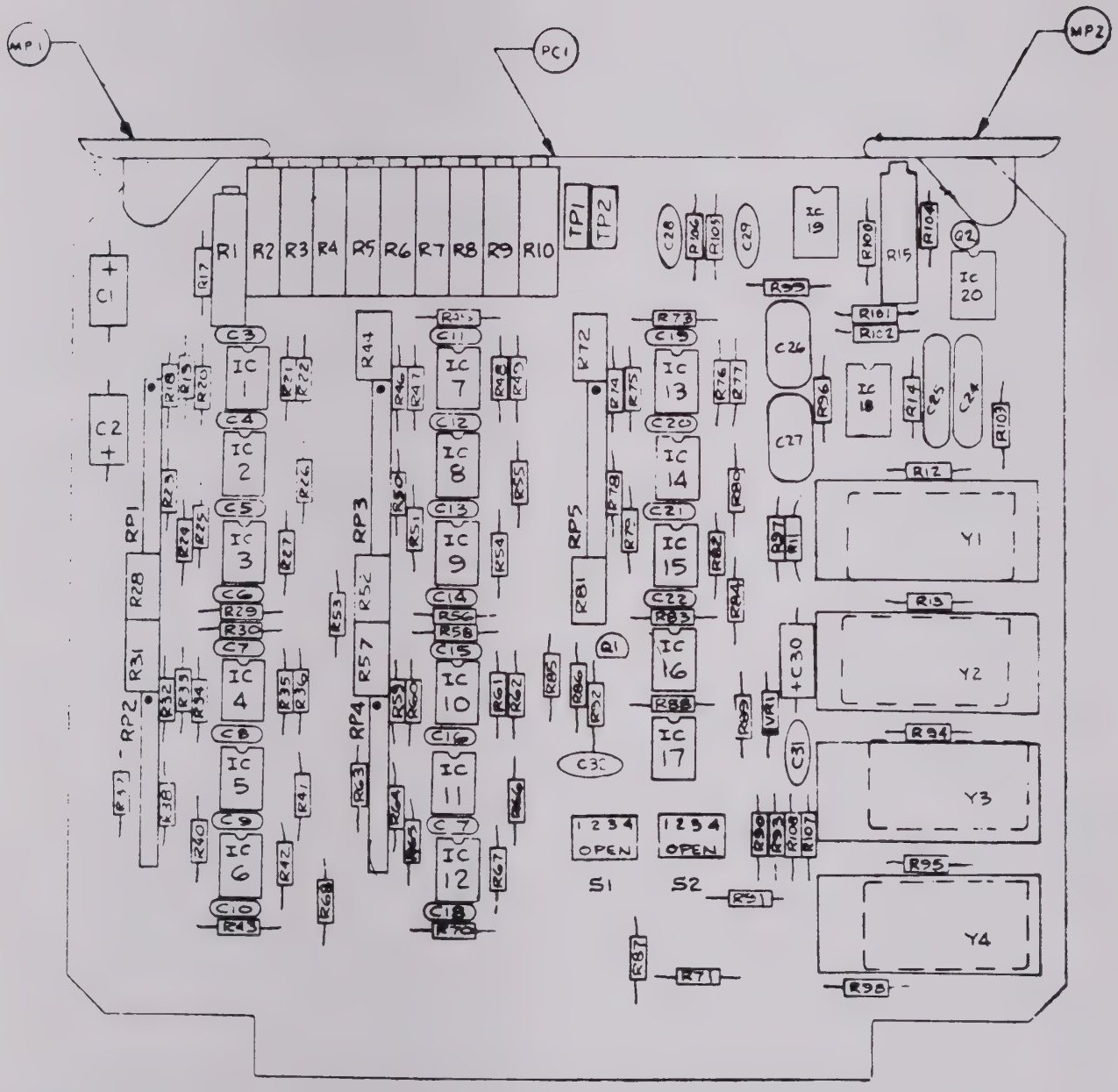

Figure 6-17. Nonlinear Distortion Circuit Card Assembly 1A7

Fig. & ref no.	Description	Mfr code	Mfr part no.	Halcyon part no.	SMR code
Fig. 6-18	DATA ACCUMULATOR CIRCUIT CARD ASSY (See fig. 6-2, ref no. A8, for nha)	51701		8000-1003-00	PAFFP
C1	CAPACITOR, Fixed, plastic, 10 uF, 10%, 20 vdcw	56289	150D106X9020B2	1503-0181-00	PAFZZN
C2	Same as C1				
C3	CAPACITOR, Fixed, ceramic, 0.1 uF, 10%, 100 vdcw	81349	CK06BX104K	1501-0074-00	PAFZZN
C4	CAPACITOR, Fixed, ceramic, 0.01 uF, 10%, 200 vdcw	81349	CK06BX103K	1501-0062-00	PAFZZN
C5	Same as C4				
C6	DIODE, Variable capacitance, 10 pF at -4 v, 5%	01281	V10B	4803-0002-00	PAFZZN
C7	Same as C4				
C8	Same as C4				
CR1	SEMICONDUCTOR DEVICE, Diode	81349	1N4148	4802-4148-00	PAFZZN
IC1 thru IC8	INTEGRATED CIRCUIT	50088	MK5007N	3130-5007-00	PAFZZN
IC9	INTEGRATED CIRCUIT	01295	SN74L00N	3130-0500-00	PAFZZN
IC10	INTEGRATED CIRCUIT	01295	SN74L02N	3130-0502-00	PAFZZN
IC11	INTEGRATED CIRCUIT	01295	SN74L42N	3130-0542-00	PAFZZN
IC12	Same as IC10				
IC13	Same as IC9				
IC14	INTEGRATED CIRCUIT	01295	SN7404N	3130-0004-00	PAFZZN
IC15	Same as IC9				
IC16	INTEGRATED CIRCUIT	01295	SN74L90N	3130-0590-00	PAFZZN
IC17	INTEGRATED CIRCUIT	50088	MK5009N	3130-5009-00	PAFZZN
IC18	Same as IC17				
IC19	INTEGRATED CIRCUIT	01295	SN7492N	3130-0092-00	PAFZZN
IC20	Same as IC16				
IC21	Same as IC19				
IC22	Same as IC16				
IC23	Same as IC16				
IC24	INTEGRATED CIRCUIT	01295	SN74L73N	3130-0573-00	PAFZZN
IC25	Same as IC9				
IC26	Same as IC24				
IC27 thru IC30	Same as IC9				
IC31	Same as IC16				
MP1	EXTRACTOR, Electrical card	18677	S-203	1401-0011-00	PAFZZN
MP2	Same as MP1				
PC1	PRINTED WIRING BOARD	51701		1700-1003-00	XAFZZ
Q1 thru Q4	TRANSISTOR	27014	2N3904	4800-3904-00	PAFZZN
Q5 thru Q8	TRANSISTOR	27014	2N3906	4800-3906-00	PAFZZN
R1	RESISTOR, Fixed, composition, 100 ohms, 5%, 1/4 w	81349	RC07GF101J	4700-0373-00	PAFZZN
R2	RESISTOR, Fixed, film, 49 9k ohms, 1%, 1/8 w	16299	NA5549.9K1%	4703-0356-00	PAFZZN
R3	RESISTOR, Fixed, composition, 22k ohms, 5%, 1/4 w	81349	RC07GF223J	4700-0429-00	PAFZZN
R4	Same as R2				
R5	RESISTOR, Fixed, composition, 2.2k ohms, 5%, 1/4 w	81349	RC07GF222J	4700-0405-00	PAFZZN
R6	Same as R5				
R7	RESISTOR, Fixed, composition, 4.7k ohms, 5%, 1/4 w	81349	RC07GF472J	4700-0413-00	PAFZZN
R8	RESISTOR, Fixed, film, 100k ohms, 1%, 1/8 w	16299	NA55100K1%	4703-0385-00	PAFZZN
R9	RESISTOR, Fixed, composition, 10k ohms, 5%, 1/4 w	81349	RC07GF103J	4700-0421-00	PAFZZN

Fig. & ref no.	Description	Mfr code	Mfr part no.	Halcyon part no.	SMR code
Fig 6-18	(Continued)				
R10	Same as R3				
R11	RESISTOR, Fixed, composition, 100k ohms, 5%, 1/4 w	81349	RC07GF104J	4700-0445-00	PAFZZN
R12	RESISTOR, Fixed, composition, 5.6k ohms, 5%, 1/4 w	81349	RC07GF562J	4700-0415-00	PAFZZN
thru					
R15					
VR1	SEMICONDUCTOR DEVICE, Diode	81349	1N759A	4802-0759-00	PAFZZN
XIC1	SOCKET, Plug-in electronic components, 16 contacts	91506	216-AG39D	2101-0000-02	PAFZZN
thru					
XIC8					
XIC9	SOCKET, Plug-in electronic components, 14 contacts	91506	214-AG39D	2101-0000-01	PAFZZN
XIC10	Same as XIC9				
XIC11	Same as XIC1				
XIC12	Same as XIC9				
thru					
XIC16					
XIC17	Same as XIC1				
XIC18	Same as XIC1				
XIC19	Same as XIC9				
thru					
XIC31					
Y1	CRYSTAL UNIT, Quartz, 999.815 kHz, 0.005%	51701		2300-0002-00	PAFZZN

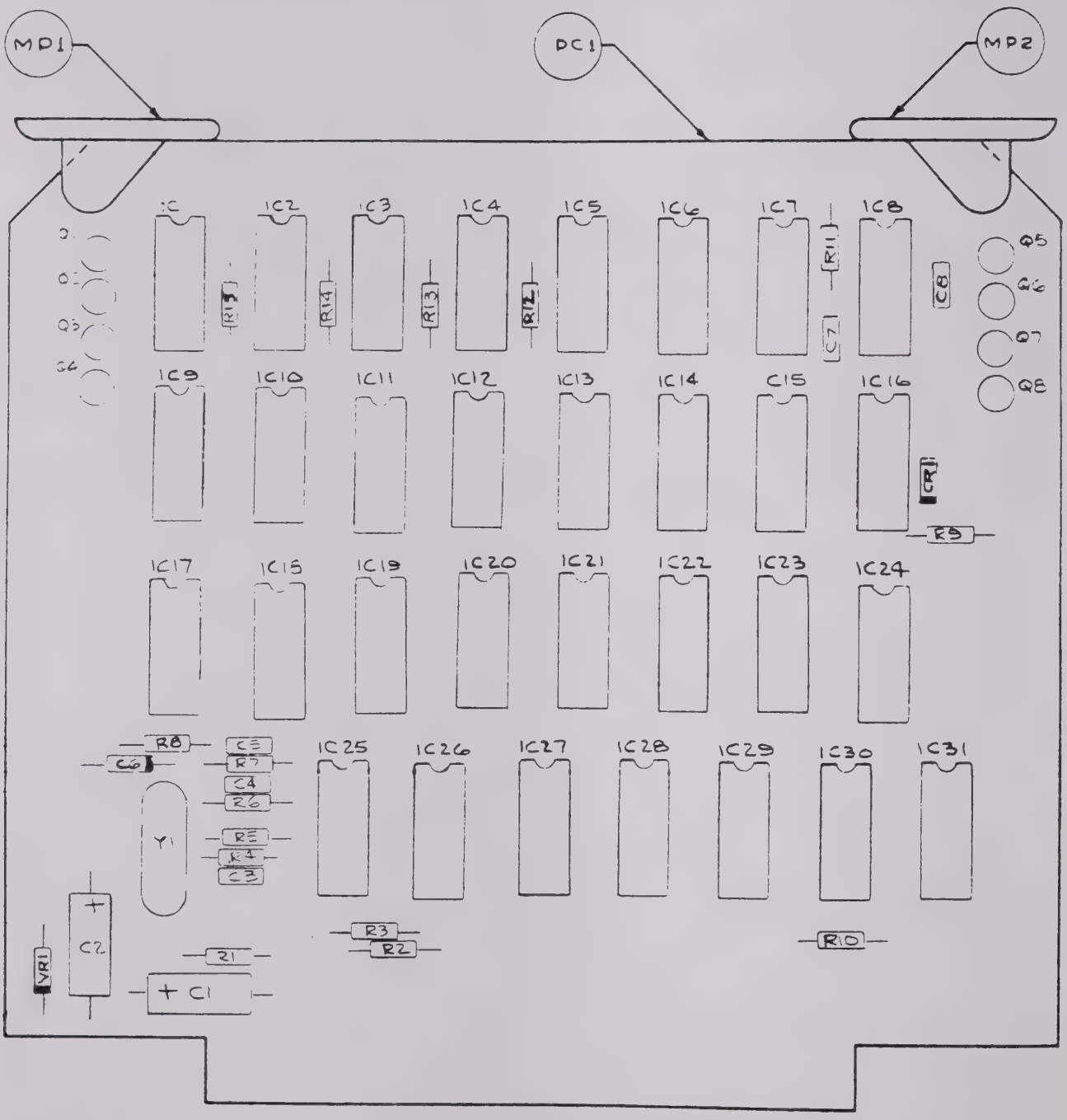

Figure 6-18. Data Accumulator Circuit Card Assembly 1A8

Fig. & ref no.	Description	Mfr code	Mfr part no.	Halcyon part no.	SMR code
Fig. 6-19	DATA AND DISPLAY CONTROL CIRCUIT CARD ASSY (See fig. 6-2, ref no. A9, for nha)	51701		8000-1008-01	PAFFP
C1	CAPACITOR, Fixed, mica, 100 pF, 5%, 500 vdcw	00853	D155C101JP	1500-0077-00	PAFZZN
C2	CAPACITOR, Fixed, plastic, 0.5 uF, 1%, 200 vdcw	27556	BA2C504F	1502-0047-00	PAFZZN
C3	CAPACITOR, Fixed, electrolytic, 10 uF, 10%, 20 vdcw	56289	150D106X9020B2	1503-0181-00	PAFZZN
C4 thru C9	CAPACITOR, Fixed, ceramic, 0.01 uF, 10%, 200 vdcw	81349	CK06BX103K	1501-0062-00	PAFZZN
C10	CAPACITOR, Fixed, mica, 510 pF, 5%, 500 vdcw	00853	D155C511JP	1500-0149-00	PAFZZN
C11	CAPACITOR, Fixed, mica, 910 pF, 5%, 500 vdcw	00853	D155C911JP	1500-0155-00	PAFZZN
CR1	SEMICONDUCTOR DEVICE, Diode	81349	1N4148	4802-4148-00	PAFZZN
IC1	INTEGRATED CIRCUIT	04713	MC14046CP	3130-4046-00	PAFZZN
IC2	INTEGRATED CIRCUIT	04713	MC14518CP	3130-4518-00	PAFZZN
IC3	INTEGRATED CIRCUIT	04713	MC14070BP	3130-4070-00	PAFZZN
IC4	INTEGRATED CIRCUIT	04713	MC14011CP	3130-4011-00	PAFZZN
IC5	INTEGRATED CIRCUIT	04713	MC14001CP	3130-4001-00	PAFZZN
IC6	Same as IC4				
IC7	Same as IC4				
IC8	Same as IC5				
IC9	Same as IC5				
IC10	INTEGRATED CIRCUIT	04713	MC14049CP	3130-4049-00	PAFZZN
IC11	Same as IC5				
IC12	INTEGRATED CIRCUIT	01295	SN74L00N	3130-0500-00	PAFZZN
IC13	INTEGRATED CIRCUIT	04713	MC14027CP	3130-4027-00	PAFZZN
IC14	Same as IC4				
IC15	Same as IC5				
IC16	Same as IC4				
IC17	Same as IC10				
IC18	Same as IC13				
IC19	Same as IC10				
IC20	INTEGRATED CIRCUIT	01295	SN74L02N	3130-0502-00	PAFZZN
IC21	INTEGRATED CIRCUIT	01295	SN7492N	3130-0092-00	PAFZZN
IC22	Same as IC21				
IC23	Same as IC4				
IC24	Same as IC4				
IC25	Same as IC5				
IC26	Same as IC4				
MP1	EXTRACTOR, Electrical card	18677	S-203	1401-0011-00	PAFZZN
MP2	Same as MP1				
PC1	PRINTED WIRING BOARD	51701		1700-1008-01	XAFZZ
Q1 thru Q4	TRANSISTOR	27014	2N3904	4800-3904-00	PAFZZN
R1	RESISTOR, Fixed, composition, 100k ohms, 5%, 1/4 w	81349	RC07GF104J	4700-0445-00	PAFZZN
R2	RESISTOR, Fixed, film, 10k ohms, 1%, 1/8 w	16299	NA5510K1%	4703-0289-00	PAFZZN
R3	RESISTOR, Fixed, composition, 1.5 megohms, 5%, 1/4 w	81349	RC07GF155J	4700-0473-00	PAFZZN
R4	RESISTOR, Fixed, film, 20k ohms, 1%, 1/8 w	16299	NA5520K1%	4703-0318-00	PAFZZN
R5	RESISTOR, Fixed, composition, 3.3k ohms, 5%, 1/4 w	81349	RC07GF332J	4700-0409-00	PAFZZN
R6	RESISTOR, Fixed, composition, 1k ohms, 5%, 1/4 w	81349	RC07GF102J	4700-0397-00	PAFZZN
R7	Same as R1				
R8	Not used				

Fig. & ref no.	Description	Mfr code	Mfr part no.	Halcyon part no.	SMR code
Fig. 6-19	(Continued)				
R9	RESISTOR, Fixed, composition, 330 ohms, 5%, 1/4 w	81349	RC07GF331J	4700-0385-00	PAFZZN
S1	SWITCH, Slide, subminiature, spdt	79727	GS111	5100-0040-00	PAFZZN
XIC1	SOCKET, Plug-in electronic components, 16 contacts	91506	216-AG39D	2101-0000-02	PAFZZN
XIC2	Same as XIC1				
XIC3 thru XIC9	SOCKET, Plug-in electronic components, 14 contacts	91506	214-AG39D	2101-0000-01	PAFZZN
XIC10	Same as XIC1				
XIC11	Same as XIC3				
XIC12	Same as XIC3				
XIC13	Same as XIC1				
XIC14 thru XIC16	Same as XIC3				
XIC17 thru XIC19	Same as XIC1				
XIC20 thru XIC26	Same as XIC3				

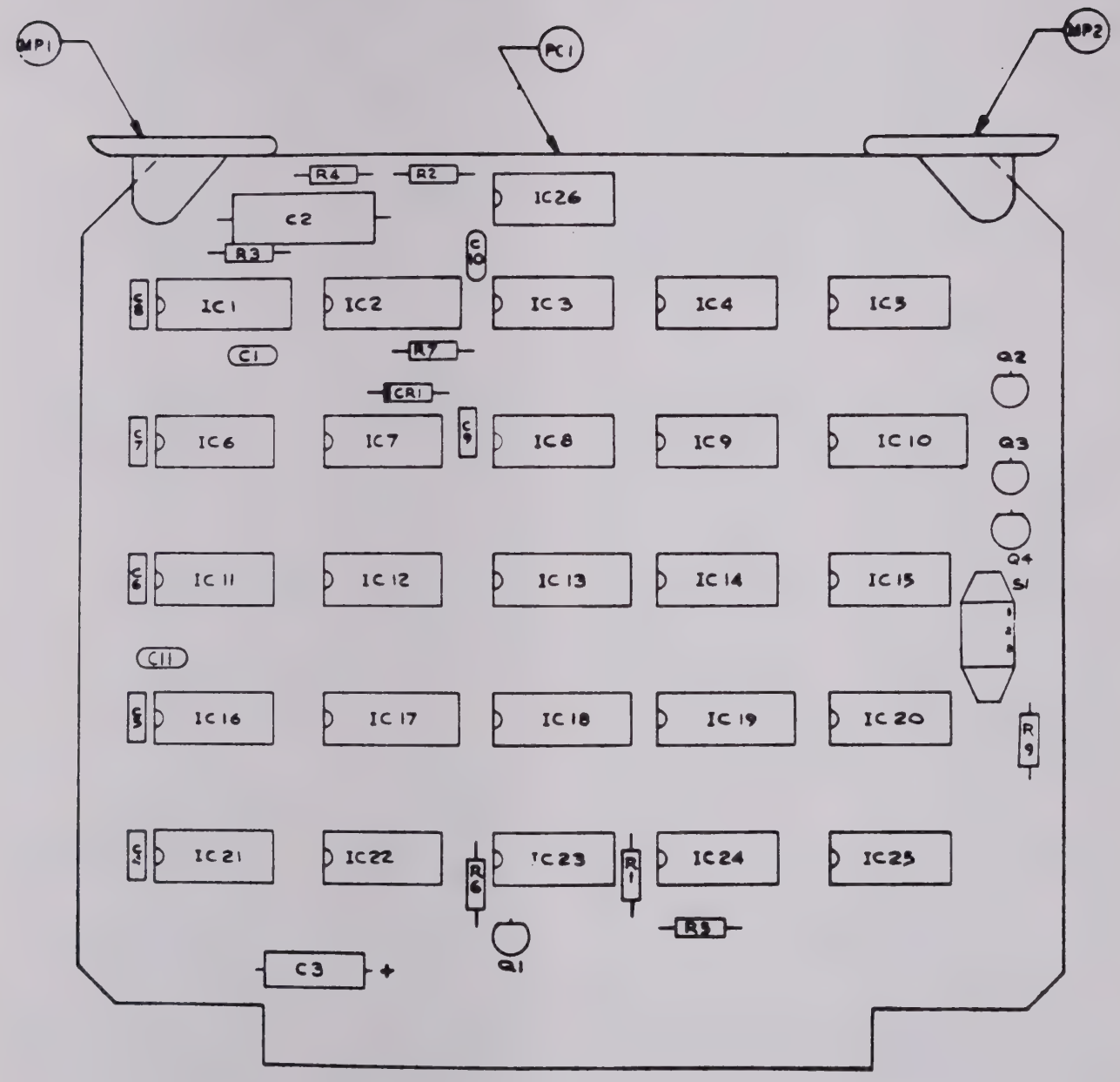

Figure 6-19. Data and Display Control Circuit Card Assembly 1A9

Fig. & ref no.	Description	Mfr code	Mfr part no.	Halcyon part no.	SMR code
Fig. 6-20	MODULATOR CIRCUIT CARD ASSY (See fig. 6-2, ref no. A10, for nha)	51701		8000-1012-00	PAFFP
C1	CAPACITOR, Fixed, electrolytic, 10 uf, -10 +50%, 35 vdcw (Manufactured by Elna America, Inc., 153 E. Savarona Way, Carson City, California 90746)	NONE	35TL10UF	1504-0052-00	PAFZZN
C2	CAPACITOR, Fixed, plastic, 0.033 uf, 1%, 200 vdcw	27556	BA2C333F	1502-0019-00	PAFZZN
C3	CAPACITOR, Fixed, plastic, 0.1 uf, 1%, 200 vdcw	27556	BA2C104F	1502-0025-00	PAFZZN
C4	CAPACITOR, Fixed, plastic, 0.4 uf, 2%, 200 vdcw	27556	BA2C404G	1502-0300-11	PAFZZN
C5	CAPACITOR, Fixed, plastic, 0.01 uf, 1%, 200 vdcw	27556	BA2C103F	1502-0013-00	PAFZZN
C6	CAPACITOR, Fixed, electrolytic, 100 uf, -0 +100%, 25 vdcw	24138	TAD100TJ25A	1504-0044-00	PAFZZN
C7	Same as C4				
C8	Same as C3				
C9	Same as C3				
C10	CAPACITOR, Fixed, mica, 150 pf, 5%, 500 vdcw	00853	D155C151JP	1500-0081-00	PAFZZN
C11	CAPACITOR, Fixed, mica, 0.01 uf, 1%, 100 vdcw	09023	CD30F103F100	1505-0003-00	PAFZZN
C12	Same as C11				
C13	CAPACITOR, Fixed, plastic, 0.5 uF, 1%, 200 vdcw	27556	BA2C504F	1502-0047-00	PAFZZN
C14	Same as C13				
C15	Same as C1				
C16	Same as C13				
C17	Same as C13				
C18 thru C20	Same as C1				
C21	Same as C13				
C22	Same as C13				
C23	Same as C11				
C24	Same as C11				
C25	Same as C13				
C26	Same as C13				
E1	TERMINAL, Stud	88245	2010-B	2103-0004-00	
E2	Same as E1				
IC1	INTEGRATED CIRCUIT	04713	MC1458CP1	3131-0005-00	PAFZZN
IC2	INTEGRATED CIRCUIT	34335	AM26L0259A	3130-2602-01	PAFZZN
IC3	Same as IC1				
IC4	INTEGRATED CIRCUIT	01295	SN72301AP	3131-0001-01	PAFZZN
IC5	INTEGRATED CIRCUIT	32293	IH5018	3132-0004-03	PAFZZN
IC6	Same as IC1				
IC7	Same as IC1				
IC8	INTEGRATED CIRCUIT	32293	IH5010	3132-0004-01	PAFZZN
IC9	INTEGRATED CIRCUIT	01295	SN74L00N	3130-0500-00	PAFZZN
IC10	INTEGRATED CIRCUIT	32293	ICL8048CPE	3132-0009-00	PAFZZN
IC11	Same as IC1				
IC12	Same as IC5				
IC13	Same as IC9				
IC14	Same as IC1				
IC15	Same as IC5				
IC16	INTEGRATED CIRCUIT	01295	TL082P	3131-0008-00	PAFZZN
IC17	Same as IC1				
IC18	Same as IC1				
IC19	Same as IC18				
IC20	Same as IC9				

Fig. & ref no.	Description	Mfr code	Mfr part no.	Halcyon part no.	SMR code
Fig. 6-20	(Continued)				
IC21	INTEGRATED CIRCUIT	04713	MC1495L	3131-0006-00	PAFZZN
MP1	EXTRACTOR, Electrical card	18677	S-203	1401-0011-00	PAFZZN
MP2	Same as MP1				
PC1	PRINTED WIRING BOARD	51701		1700-1012-00	XAFZZ
R1	RESISTOR, Variable, 5k ohms, 20%	73138	72XWR5K	4750-0009-00	PAFZZN
R2	RESISTOR, Variable, 50k ohms, 20%	73138	72XWR50K	4750-0013-00	PAFZZN
R3	RESISTOR, Variable, 10k ohms, 20%	73138	72XWR10K	4750-0010-00	PAFZZN
R4	Same as R2				
R5	Same as R1				
R6	RESISTOR, Variable, 20k ohms, 20%	73138	72XWR20K	4750-0011-00	PAFZZN
R7	RESISTOR, Variable, 2k ohms, 10%	71450	190PC202A	4750-0028-00	PAFZZN
R8	Same as R6				
R9 thru R11	Same as R3				
R12	Same as R1				
R13	RESISTOR, Fixed, composition, 33k ohms, 5%, 1/4 w	81349	RC07GF333J	4700-0433-00	PAFZZN
R14	Same as R13				
R15	RESISTOR, Fixed, film, 301K ohms, 1%, 1/8 w	16299	NA55301K1%	4703-0431-00	PAFZZN
R16	Same as R15				
R17	RESISTOR, Fixed, film, 23.7k ohms, 1%, 1/8 w	16299	NA5523.7K1%	4703-0325-00	PAFZZN
R18	RESISTOR, Fixed, film, 7.5k ohms, 1%, 1/8 w	16299	NA557.5K1%	4703-0277-00	PAFZZN
R19	RESISTOR, Fixed, film, 124k ohms, 1%, 1/8 w	16299	NA55124K1%	4703-0394-00	PAFZZN
R20	RESISTOR, Fixed, film, 37.4k ohms, 1%, 1/8 w	16299	NA5537.4K1%	4703-0344-00	PAFZZN
R21	RESISTOR, Fixed, film, 10k ohms, 1%, 1/8 w	16299	NA5510K1%	4703-0289-00	PAFZZN
R22	RESISTOR, Fixed, film, 4.99k ohms, 1%, 1/8 w	16299	NA554.99K1%	4703-0260-00	PAFZZN
R23	RESISTOR, Fixed, film, 36.5k ohms, 1%, 1/8 w	16299	NA5536.5K1%	4703-0343-00	PAFZZN
R24	RESISTOR, Fixed, film, 15k ohms, 1%, 1/8 w	16299	NA5515K1%	4703-0306-00	PAFZZN
R25	THERMISTOR, Fixed, 1k ohms, 1%	94322	Q81 EL2B	5300-0193-00	PAFZZN
R26	RESISTOR, Fixed, film, 95.3k ohms, 1%, 1/8 w	16299	NA5595.3K1%	4703-0383-00	PAFZZN
R27	Same as R21				
R28	RESISTOR, Fixed, film, 42.2k ohms, 1%, 1/8 w	16299	NA5542.2K1%	4703-0349-00	PAFZZN
R29	Same as R21				
R30	Same as R21				
R31	RESISTOR, Fixed, film, 84.5k ohms, 1%, 1/8 w	16299	NA5584.5K1%	4703-0378-00	PAFZZN
R32	RESISTOR, Fixed, film, 1.33k ohms, 1%, 1/8 w	16299	NA551.33K1%	4703-0205-00	PAFZZN
R33	Same as R23				
R34	Same as R15				
R35	RESISTOR, Fixed, film, 19.6k ohms, 1%, 1/8 w	16299	NA5519.6K1%	4703-0317-00	PAFZZN
R36	Same as R26				
R37	Same as R15				
R38	RESISTOR, Fixed, film, 22.1k ohms, 1%, 1/8 w	16299	NA5522.1K1%	4703-0322-00	PAFZZN
R39	RESISTOR, Fixed, film, 11k ohms, 1%, 1/8 w	16299	NA5511K1%	4703-0293-00	PAFZZN
R40	Same as R38				
R41	RESISTOR, Fixed, film, 221k ohms, 1%, 1/8 w	16299	NA55221K1%	4703-0418-00	PAFZZN
R42	RESISTOR, Fixed, film, 110k ohms, 1%, 1/8 w	16299	NA55110K1%	4703-0389-00	PAFZZN
R43	Same as R41				
R44	Same as R39				
R45	RESISTOR, Fixed, film, 24.9k ohms, 1%, 1/8 w	16299	NA5524.9K1%	4703-0327-00	PAFZZN
R46	RESISTOR, Fixed, film, 95.3k ohms, 1%, 1/8 w (Select at test, nominal value shown)	16299	NA5595.3K1%	4703-0095-00	PAFZZN
R47	Same as R21				

Fig. & ref no.	Description	Mfr code	Mfr part no.	Halcyon part no.	SMR code
Fig. 6-20	(Continued)				
R48	Same as R21				
R49	RESISTOR, Fixed, film, 21k ohms, 1%, 1/8 w	16299	NA5521K1%	4703-0320-00	PAFZZN
R50	RESISTOR, Fixed, film, 24.3k ohms, 1%, 1/8 w	16299	NA5524.3K1%	4703-0326-00	PAFZZN
R51	RESISTOR, Fixed, film, 1k ohms, 1%, 1/8 w	16299	NA551K1%	4703-0193-00	PAFZZN
R52 thru R55	Same as R21				
R56	RESISTOR, Fixed, film, 2.87k ohms, 1%, 1/8 w	16299	NA552.87K1%	4703-0237-00	PAFZZN
R57 thru R59	Same as R21				
R60	Same as R31				
R61	RESISTOR, Fixed, film, 1 megohms, 1%, 1/4 w	16299	NA601M1%	4704-0481-00	PAFZZN
R62	RESISTOR, Fixed, film, 66.5k ohms, 1%, 1/8 w	16299	NA5566.5K1%	4703-0368-00	PAFZZN
R63	Same as R49				
R64	RESISTOR, Fixed, film, 825k ohms, 1%, 1/4 w	16299	NA60825K1%	4704-0473-00	PAFZZN
R65	RESISTOR, Fixed, film, 2 megohms, 1%, 1/4 w	16299	NA602M1%	4704-0510-00	PAFZZN
R66	RESISTOR, Fixed, film, 1.69 megohms, 1%, 1/4 w	16299	NA601.69M1%	4704-0503-00	PAFZZN
R67	RESISTOR, Fixed, film, 1.37k ohms, 1%, 1/8 w	16299	NA551.37K1%	4703-0206-00	PAFZZN
R68	RESISTOR, Fixed, film, 56.2k ohms, 1%, 1/8 w	16299	NA5556.2K1%	4703-0361-00	PAFZZN
R69	RESISTOR, Fixed, film, 133k ohms, 1%, 1/8 w	16299	NA55133K1%	4703-0397-00	PAFZZN
R70	Same as R42				
R71	Same as R62				
R72	Same as R42				
R73	RESISTOR, Fixed, film, 4.75k ohms, 1%, 1/8 w	16299	NA554.75K1%	4703-0258-00	PAFZZN
R74	Same as R32				
R75	Same as R69				
R76	Same as R56				
R77 thru R80	Same as R21				
R81	RESISTOR, Fixed, film, 287k ohms, 1%, 1/8 w	16299	NA55287K1%	4703-0429-00	PAFZZN
R82	RESISTOR, Fixed, film, 100k ohms, 1%, 1/8 w	16299	NA55100K1%	4703-0385-00	PAFZZN
R83	Same as R24				
R84	RESISTOR, Fixed, film, 1.87k ohms, 1%, 1/8 w	16299	NA551.87K1%	4703-0219-00	PAFZZN
R85	Same as R73				
R86	RESISTOR, Fixed, film, 6.81k ohms, 1%, 1/8 w	16299	NA556.81K1%	4703-0273-00	PAFZZN
R87	RESISTOR, Fixed, composition, 220 ohms, 5%, 1/4 w	81349	RC07GF221J	4700-0381-00	PAFZZN
R88	RESISTOR, Fixed, composition, 22k ohms, 5%, 1/4 w	81349	RC07GF223J	4700-0429-00	PAFZZN
R89	Same as R21				
R90	RESISTOR, Fixed, film, 46.4k ohms, 1%, 1/8 w	16299	NA5546.4K1%	4703-0353-00	PAFZZN
R91	Same as R90				
R92	Same as R21				
R93	Same as R81				
R94	Samee as R23				
R95	Same as R82				
R96	Same as R82				
R97	RESISTOR, Fixed, film, 4.02k ohms, 1%, 1/8 w	16299	NA554.02K1%	4703-0251-00	PAFZZN
R98	RESISTOR, Fixed, film, 8.25k ohms, 1%, 1/8 w	16299	NA558.25K1%	4703-0281-00	PAFZZN
R99	RESISTOR, Fixed, film, 12.1k ohms, 1%, 1/8 w	16299	NA5512.1K1%	4703-0297-00	PAFZZN
R100	Same as R98				
R101	Same as R87				

Fig. & ref no.	Description	Mfr code	Mfr part no.	Halcyon part no.	SMR code
Fig. 6-20	(Continued)				
R102	Same as R98				
R103	Same as R98				
R104 thru R109	RESISTOR, Fixed, composition, 22k ohms, 5%, 1/4 w	81349	RC07GF223J	4700-0429-00	PAFZZN
R110	Same as R87				
R111	Same as R87				
R112	RESISTOR, Fixed, film, 221 ohms, 1%, 1/8 w	16299	NA55221R1%	4703-0130-00	PAFZZN
R113	Same as R112				
R114	RESISTOR, Fixed, composition, 470k ohms, 5%, 1/4 w	81349	RC07GF474J	4700-0461-00	PAFZZN
R115 thru R120	Same as R88				
R121	Same as R1				
R122	Same as R7				
R123	Same as R21				
R124	RESISTOR, Fixed, composition, 2.2k ohms, 5%, 1/4 w	81349	RC07GF222J	4700-0405-00	PAFZZN
TP1	JACK, Tip, black	74970	105-0753-001	2100-0003-00	PAFZZN
TP2	JACK, Tip, green	74970	105-0754-001	2100-0004-00	PAFZZN
VR1	SEMICONDUCTOR DEVICE, Diode	81349	1N751A	4802-0751-00	PAFZZN
VR2	SEMICONDUCTOR DEVICE, Diode	04713	1N943A	4802-0943-00	PAFZZN
VR3	Same as VR2				
XIC1	SOCKET, Plug-in electronic components, 8 contacts	91506	208-AG39D	2101-0000-00	PAFZZN
XIC2	SOCKET, Plug-in electronic components, 16 contacts	91506	216-AG39D	2101-0000-02	PAFZZN
XIC3 thru XIC8	Same as XIC1				
XIC9	SOCKET, Plug-in electronic components, 14 contacts	91506	214-AG39D	2101-0000-01	PAFZZN
XIC10	Same as XIC2				
XIC11	Same as XIC1				
XIC12	Same as XIC1				
XIC13	Same as XIC9				
XIC14 thru XIC19	Same as XIC1				
XIC20	Same as XIC9				
XIC21	Same as XIC9				

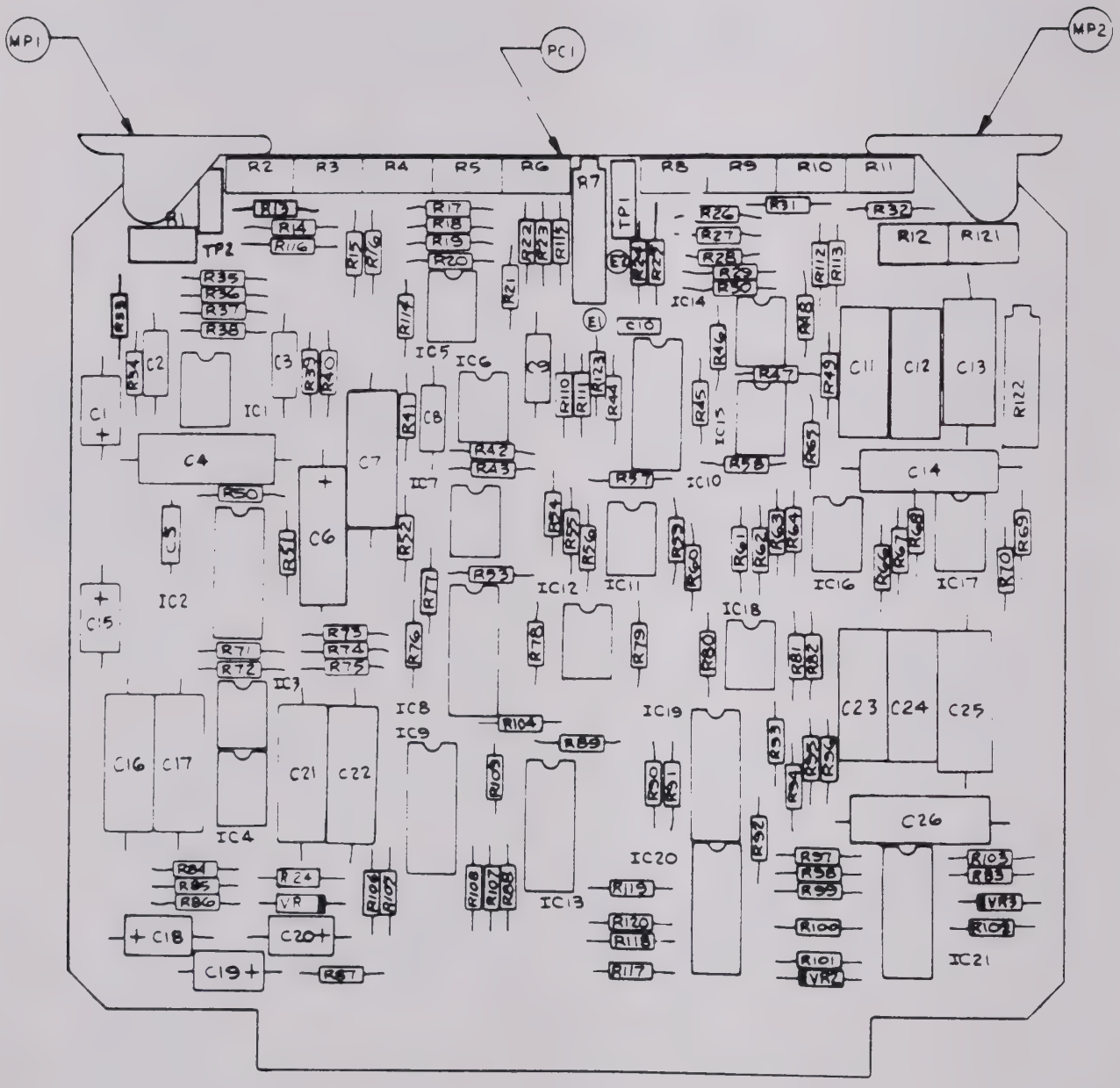

Figure 6-20. Modulator Circuit Card Assembly 1A10

Fig. & ref no.	Description	Mfr code	Mfr part no.	Halcyon part no.	SMR code
Fig. 6-21	SWEEP AND VCO CIRCUIT CARD ASSY (See fig. 6-2, ref no. A11, for nha)	51701		8000-1019-00	PAFFFP
C1	CAPACITOR, Fixed, electrolytic, 50 uF, -10 +100%, 15 vdcw	90201	MTA50E15	1505-0006-00	PAFZZN
C2	CAPACITOR, Fixed, mica, 27 pF, 5%, 500 vdcw	00853	D155C270JP	1500-0062-00	PAFZZN
C3	CAPACITOR, Fixed, ceramic, 0.1 uF, 10%, 100 vdcw	81349	CK06BX104K	1501-0074-00	PAFZZN
C4 thru C6	CAPACITOR, Fixed, electrolytic, 10 uF, -10 +50%, 35 vdcw (Manufactured by Elna America, Inc., 153 E. Savarona Way, Carson City, California 90746)	NONE	35TL10UF	1504-0052-00	PAFZZN
C7	CAPACITOR, Fixed, electrolytic, 150 uF, 10%, 15 vdcw	56289	150D157X9015S2	1503-0135-00	PAFZZN
C8	Same as C3				
C9	Same as C4				
C10	CAPACITOR, Fixed, ceramic, 0.01 uF, 10%, 200 vdcw	81349	CK06BX103K	1501-0062-00	PAFZZN
C11	Same as C4				
C12	CAPACITOR, Fixed, electrolytic, 22 uF, 10%, 15 vdcw	56289	150D226X9015B2	1503-0125-00	PAFZZN
C13	Not used				
C14	CAPACITOR, Fixed, plastic, 0.033 uF, 1%, 200 vdcw	27556	BA2C333F	1502-0019-00	PAFZZN
C15	Same as C3				
C16	Same as C3				
C17	Not used				
C18	Not used				
C19	CAPACITOR, Fixed, mica, 390 pF, 5%, 500 vdcw	00853	D155C391JP	1500-0145-00	PAFZZN
CR1 thru CR9	SEMICONDUCTOR DEVICE, Diode	81349	1N4148	4802-4148-00	PAFZZN
CR10	Not used				
CR11	Not used				
CR12	Same as CR1				
E1 thru E3	TERMINAL, Stud	88245	2010-B	2103-0004-00	
MP1	EXTRACTOR, Electrical card	18677	S-203	1401-0011-00	PAFZZN
MP2	Same as MP1				
PC1	PRINTED WIRING BOARD	51701		1700-1019-00	XAFZZ
Q1	TRANSISTOR	27014	2N3563	4800-3563-00	PAFZZN
Q2	Same as Q1				
Q3	TRANSISTOR	27014	2N3906	4800-3906-00	PAFZZN
Q4	TRANSISTOR	27014	2N3904	4800-3904-00	PAFZZN
Q5	TRANSISTOR	04713	2N4392	4800-4392-00	PAFZZN
Q6	Same as Q4				
Q7	TRANSISTOR	04713	2N5459	4800-5459-00	PAFZZN
Q8	Same as Q7				
Q9	Same as Q3				
Q10	Same as Q4				
R1	RESISTOR, Variable, 2k ohms, 20%	73138	72XWR2K	4750-0008-00	PAFZZN
R2	RESISTOR, Variable, 20k ohms, 10%	71450	190PC203A	4750-0031-00	PAFZZN
R3 thru R5	RESISTOR, Variable, 5k ohms, 10%	71450	190PC502A	4750-0029-00	PAFZZN
R6	RESISTOR, Variable, 20k ohms, 20%	73138	72XWR20K	4750-0011-00	PAFZZN
R7	RESISTOR, Fixed, film, 2k ohms, 1%, 1/8 w	16299	NA552K1%	4703-0222-00	PAFZZN
R8	RESISTOR, Variable, 10k ohms, 20%	73138	72XWR10K	4750-0010-00	PAFZZN
R9	RESISTOR, Fixed, composition, 2.2k ohms, 5%, 1/4 w	81349	RC07GF222J	4700-0405-00	PAFZZN
R10	RESISTOR, Variable, 500 ohms, 20%	73138	72XWR500	4750-0006-00	PAFZZN
R11	RESISTOR, Fixed, composition, 4.7k ohms, 5%, 1/4 w	81349	RC07GF472J	4700-0413-00	PAFZZN

ig. & ef no.	Description	Mfr code	Mfr part no.	Halcyon part no.	SMR code
ig 6-21	(Continued)				
R12	Same as R8				
R13	RESISTOR. Fixed, composition, 2.7 megohms, 5%, 1/4 w	81349	RC07GF275J	4700-0479-00	PAFZZN
R14	RESISTOR Variable, 500 ohms, 10%	71450	190PC501A	4750-0026-00	PAFZZN
R15	Same as R2				
R16	RESISTOR Variable, 3k ohms, 20%	73138	72XWR1K	4750-0007-00	PAFZZN
R17	Same as R9				
R18	RESISTOR. Fixed, film, 4.99k ohms, 1%, 1/8 w	16299	NA554.99K1%	4703-0260-00	PAFZZN
R19	RESISTOR. Fixed, film, 3.65k ohms, 1%, 1/8 w	16299	NA553.65K1%	4703-0247-00	PAFZZN
R20	RESISTOR. Fixed, film, 10k ohms, 1%, 1/8 w	16299	NA5510K1%	4703-0289-00	PAFZZN
R21	RESISTOR. Fixed, composition, 1.3k ohms, 5%, 1/4 w	81349	RC07GF132J	4700-0400-00	PAFZZN
R22	RESISTOR. Fixed, composition, 100k ohms, 5%, 1/4 w	81349	RC07GF104J	4700-0445-00	PAFZZN
R23	RESISTOR. Fixed, film, 24.9k ohms, 1%, 1/8 w	16299	NA5524.9K1%	4703-0327-00	PAFZZN
R24	Same as R23				
R25	RESISTOR. Fixed, film, 3.4k ohms, 1%, 1/8 w	16299	NA553.4K1%	4703-0244-00	PAFZZN
R26	RESISTOR. Fixed, film, 6.04k ohms, 1%, 1/8 w	16299	NA556.04K1%	4703-0268-00	PAFZZN
R27	RESISTOR. Fixed, film, 5.36k ohms, 1%, 1/8 w	16299	NA555.36K1%	4703-0263-00	PAFZZN
R28	RESISTOR. Fixed, film, 40.2k ohms, 1%, 1/8 w	16299	NA5540.2K1%	4703-0347-00	PAFZZN
R29	RESISTOR. Fixed, film, 49.9k ohms, 1%, 1/8 w	16299	NA5549.9K1%	4703-0356-00	PAFZZN
R30	RESISTOR. Fixed, film, 137 ohms, 1%, 1/8 w	16299	NA55137R1%	4703-0110-00	PAFZZN
R31	RESISTOR. Fixed, film, 1k ohms, 1%, 1/8 w	16299	NA551K1%	4703-0193-00	PAFZZN
R32	Same as R31				
R33	Same as R28				
R34	Same as R29				
R35	Same as R30				
R36	Same as R2				
R37	Same as R22				
R38	RESISTOR. Fixed, film, 3.32k ohms, 1%, 1/8 w	16299	NA553.32K1%	4703-0243-00	PAFZZN
R39	RESISTOR. Fixed, composition, 10k ohms, 5%, 1/4 w	81349	RC07GF103J	4700-0421-00	PAFZZN
R40	RESISTOR. Fixed, film, 20k ohms, 1%, 1/8 w	16299	NA5520K1%	4703-0318-00	PAFZZN
R41	Same as R23				
R42	RESISTOR. Fixed, composition, 390k ohms, 5%, 1/4 w	81349	RC07GF394J	4700-0459-00	PAFZZN
R43	Same as R20				
R44	Same as R9				
R45	RESISTOR. Fixed, composition, 3.9k ohms, 5%, 1/4 w	81349	RC07GF392J	4700-0411-00	PAFZZN
R46	RESISTOR. Fixed, composition, 1k ohms, 5%, 1/4 w	81349	RC07GF102J	4700-0397-00	PAFZZN
R47	Same as R39				
R48	RESISTOR. Fixed, film, 9.53k ohms, 1%, 1/8 w	16299	NA559.53K1%	4703-0287-00	PAFZZN
R49	RESISTOR. Fixed, film, 1.87k ohms, 1%, 1/8 w	16299	NA551.87K1%	4703-0219-00	PAFZZN
R50	RESISTOR. Fixed, film, 332 ohms, 1%, 1/8 w	16299	NA55332R1%	4703-0147-00	PAFZZN
R51	RESISTOR. Fixed, film, 16.2k ohms, 1%, 1/8 w	16299	NA5516.2K1%	4703-0309-00	PAFZZN
R52	RESISTOR. Fixed, film, 19.6k ohms, 1%, 1/8 w	16299	NA5519.6K1%	4703-0317-00	PAFZZN
R53	RESISTOR. Fixed, film, 4.32k ohms, 1%, 1/8 w	16299	NA554.32K1%	4703-0254-00	PAFZZN
R54	RESISTOR. Fixed, film, 909 ohms, 1%, 1/8 w	16299	NA55909R1%	4703-0189-00	PAFZZN
R55	RESISTOR. Fixed, film, 4.12k ohms, 1%, 1/8 w	16299	NA554.12K1%	4703-0252-00	PAFZZN
R56	RESISTOR. Fixed, composition, 20k ohms, 5%, 1/4 w	81349	RC07GF203J	4700-0428-00	PAFZZN
R57	Same as R56				
R58	RESISTOR. Fixed, film, 392 ohms, 1%, 1/8 w	16299	NA55392R1%	4703-0154-00	PAFZZN
R59	RESISTOR. Fixed, film, 301 ohms, 1%, 1/8 w	16299	NA55301R1%	4703-0143-00	PAFZZN
R60	Same as R31				
R61	Same as R18				
R62	RESISTOR. Fixed, composition, 100 ohms, 5%, 1/4 w	81349	RC07GF101J	4700-0373-00	PAFZZN
R63	Same as R20				

Fig. & ref no.	Description	Mfr code	Mfr part no.	Halcyon part no.	SMR code
Fig 6-21	(Continued)				
R64	Same as R20				
R65	Same as R31				
R66	RESISTOR, Fixed, film, 221k ohms, 1%, 1/8 w	16299	NA55221K1%	4703-0418-00	PAFZZN
R67	Same as R20				
R68	RESISTOR, Fixed, composition, 22k ohms, 5%, 1/4 w	81349	RC07GF223J	4700-0429-00	PAFZZN
R69	Same as R68				
R70	RESISTOR, Fixed, composition, 6.8k ohms, 5%, 1/4 w	81349	RC07GF682J	4700-0417-00	PAFZZN
R71	Same as R39				
R72	Same as R68				
R73	RESISTOR, Fixed, film, 3.83k ohms, 1%, 1/8 w	16299	NA553.83K1%	4703-0249-00	PAFZZN
R74	RESISTOR, Fixed, film, 150 ohms, 1%, 1/2 w	16299	NA65150R1%	4705-0114-00	PAFZZN
R75	RESISTOR, Fixed, film, 825 ohms, 1%, 1/8 w	16299	NA55825R1%	4703-0185-00	PAFZZN
R76	Same as R58				
R77	RESISTOR, Fixed, film, 475 ohms, 1%, 1/8 w	16299	NA55475R1%	4703-0162-00	PAFZZN
R78	Same as R31				
R79	Same as R20				
R80	Same as R20				
R81	Same as R18				
R82	Same as R20				
R83	Same as R62				
R84	Same as R9				
R85	Same as R68				
R86	Same as R62				
R87	Same as R20				
R88	Same as R20				
R89	RESISTOR, Fixed, film, 1.18k ohms, 1%, 1/8 w	16299	NA551.18K1%	4703-0200-00	PAFZZN
R90	RESISTOR, Fixed, composition, 390 ohms, 5%, 1/4 w	81349	RC07GF391J	4700-0387-00	PAFZZN
R91 thru R93	Same as R68				
R94	Same as R31				
R95	RESISTOR, Fixed, film, 14k ohms, 1%, 1/8 w	16299	NA5514K1%	4703-0303-00	PAFZZN
R96	Same as R59				
R97	Same as R75				
R98	Same as R50				
R99	Same as R18				
R100	Same as R18				
R101	Same as R77				
R102	Same as R53				
R103	Same as R9				
R104	Same as R48				
R105	RESISTOR, Fixed, composition, 150k ohms, 5%, 1/4 w	81349	RC07GF154J	4700-0449-00	PAFZZN
R106	RESISTOR, Fixed, composition, 1.2k ohms, 5%, 1/4 w	81349	RC07GF122J	4700-0399-00	PAFZZN
R107	Same as R20				
R108	Same as R20				
R109	Same as R74				
R110	Same as R20				
R111	Same as R20				
R112	Same as R18				
R113	RESISTOR, Fixed, film, 4.02k ohms, 1%, 1/8 w	16299	NA554.02K1%	4703-0251-00	PAFZZN
R114	Same as R68				
R115	Same as R20				

Fig. & ref no.	Description	Mfr code	Mfr part no.	Halcyon part no.	SMR code
Fig 6-21	(Continued)				
R116	RESISTOR, Fixed, film, 13.7k ohms, 1%, 1/8 w	16299	NA5513.7K1%	4703-0302-00	PAFZZN
R117	Same as R20				
R118	RESISTOR, Fixed, composition, 270k ohms, 5%, 1/4 w	81349	RC07GF274J	4700-0455-00	PAFZZN
R119	Same as R16				
R120	RESISTOR, Fixed, composition, 1.8k ohms, 5%, 1/4 w	81349	RC07GF182J	4700-0403-00	PAFZZN
R121	Same as R120				
R122	RESISTOR, Fixed, film, 7.68k ohms, 1%, 1/8 w	16299	NA557.68K1%	4703-0278-00	PAFZZN
R123	Same as R20				
R124	RESISTOR, Variable, 2 megohms, 20%	73138	72XWR2M	4750-0019-00	PAFZZN
TP1	JACK, Tip, black	74970	105-0753-001	2100-0003-00	PAFZZN
U1	INTEGRATED CIRCUIT	04713	MC1458CP1	3131-0005-00	PAFZZN
U2	INTEGRATED CIRCUIT	32293	IH5018	3132-0004-03	PAFZZN
U3	INTEGRATED CIRCUIT	04713	MC14049CP	3130-4049-00	PAFZZN
U4	INTEGRATED CIRCUIT	01295	SN72301AP	3131-0001-01	PAFZZN
U5	Same as U1				
U6	Same as U1				
U7	INTEGRATED CIRCUIT	32293	IH5014	3132-0004-02	PAFZZN
U8	Same as U1				
U9	Same as U1				
U10	INTEGRATED CIRCUIT	04713	MC14528CP	3130-4528-00	PAFZZN
U11	Same as U1				
U12	Same as U1				
U13	INTEGRATED CIRCUIT	32293	ICL8038BCPD	3132-0003-01	PAFZZN
U14 thru U16	Same as U1				
U17	INTEGRATED CIRCUIT	02735	CA3039	3132-0002-00	PAFZZN
U18	Same as U17				
U19	Same as U1				
U20	Same as U1				
VR1	SEMICONDUCTOR DEVICE, Diode	81349	1N755A	4802-0755-00	PAFZZN
VR2	Same as VR1				
VR3	SEMICONDUCTOR DEVICE, Diode	04713	1N825A	4802-0825-00	PAFZZN
VR4	SEMICONDUCTOR DEVICE, Diode	81349	1N759A	4802-0759-00	PAFZZN
VR5	Same as VR4				
XU1	SOCKET, Plug-in electronic components, 8 contacts	91506	208-AG39D	2101-0000-00	PAFZZN
XU2	Same as XU1				
XU3	SOCKET, Plug-in electronic components, 16 contacts	91506	216-AG39D	2101-0000-02	PAFZZN
XU4 thru XU6	Same as XU1				
XU7	SOCKET, Plug-in electronic components, 14 contacts	91506	214-AG39D	2101-0000-01	PAFZZN
XU8	Same as XU1				
XU9	Same as XU1				
XU10	Same as XU3				
XU11	Same as XU1				
XU12	Same as XU1				
XU13	Same as XU7				
XU14 thru XU16	Same as XU1				
XU17	Not used				

Fig. & ref no.	Description	Mfr code	Mfr part no.	Halcyon part no.	SMR code
Fig. 6-21	(Continued)				
XU18	Not used				
XU19	Same as XU1				
XU20	Same as XU1				

Fig. & ref no.	Description	Mfr code	Mfr part no.	Halcyon part no.	SMR code
Fig. 6-21	(Continued)				
R116	RESISTOR, Fixed, film, 13.7k ohms, 1%, 1/8 w	16299	NA5513.7K1%	4703-0302-00	PAFZZN
R117	Same as R20				
R118	RESISTOR, Fixed, composition, 270k ohms, 5%, 1/4 w	81349	RC07GF274J	4700-0455-00	PAFZZN
R119	Same as R16				
R120	RESISTOR, Fixed, composition, 1.8k ohms, 5%, 1/4 w	81349	RC07GF182J	4700-0403-00	PAFZZN
R121	Same as R120				
R122	RESISTOR, Fixed, film, 7.68k ohms, 1%, 1/8 w	16299	NA557.68K1%	4703-0278-00	PAFZZN
R123	Same as R20				
R124	RESISTOR, Variable, 2 megohms, 20%	73138	72XWR2M	4750-0019-00	PAFZZN
TP1	JACK, Tip, black	74970	105-0753-001	2100-0003-00	PAFZZN
U1	INTEGRATED CIRCUIT	04713	MC1458CP1	3131-0005-00	PAFZZN
U2	INTEGRATED CIRCUIT	32293	IH5018	3132-0004-03	PAFZZN
U3	INTEGRATED CIRCUIT	04713	MC14049CP	3130-4049-00	PAFZZN
U4	INTEGRATED CIRCUIT	01295	SN72301AP	3131-0001-01	PAFZZN
U5	Same as U1				
U6	Same as U1				
U7	INTEGRATED CIRCUIT	32293	IH5014	3132-0004-02	PAFZZN
U8	Same as U1				
U9	Same as U1				
U10	INTEGRATED CIRCUIT	04713	MC14528CP	3130-4528-00	PAFZZN
U11	Same as U1				
U12	Same as U1				
U13	INTEGRATED CIRCUIT	32293	ICL8038BCPD	3132-0003-01	PAFZZN
U14 thru U16	Same as U1				
U17	INTEGRATED CIRCUIT	02735	CA3039	3132-0002-00	PAFZZN
U18	Same as U17				
U19	Same as U1				
U20	Same as U1				
VR1	SEMICONDUCTOR DEVICE, Diode	81349	1N755A	4802-0755-00	PAFZZN
VR2	Same as VR1				
VR3	SEMICONDUCTOR DEVICE, Diode	04713	1N825A	4802-0825-00	PAFZZN
VR4	SEMICONDUCTOR DEVICE, Diode	81349	1N759A	4802-0759-00	PAFZZN
VR5	Same as VR4				
XU1	SOCKET, Plug-in electronic components, 8 contacts	91506	208-AG39D	2101-0000-00	PAFZZN
XU2	Same as XU1				
XU3	SOCKET, Plug-in electronic components, 16 contacts	91506	216-AG39D	2101-0000-02	PAFZZN
XU4 thru XU6	Same as XU1				
XU7	SOCKET, Plug-in electronic components, 14 contacts	91506	214-AG39D	2101-0000-01	PAFZZN
XU8	Same as XU1				
XU9	Same as XU1				
XU10	Same as XU3				
XU11	Same as XU1				
XU12	Same as XU1				
XU13	Same as XU7				
XU14 thru XU16	Same as XU1				
XU17	Not used				

Fig. & ref no.	Description	Mfr code	Mfr part no.	Halcyon part no.	SMR code
Fig. 6-21	(Continued)				
XU18	Not used				
XU19	Same as XU1				
XU20	Same as XU1				

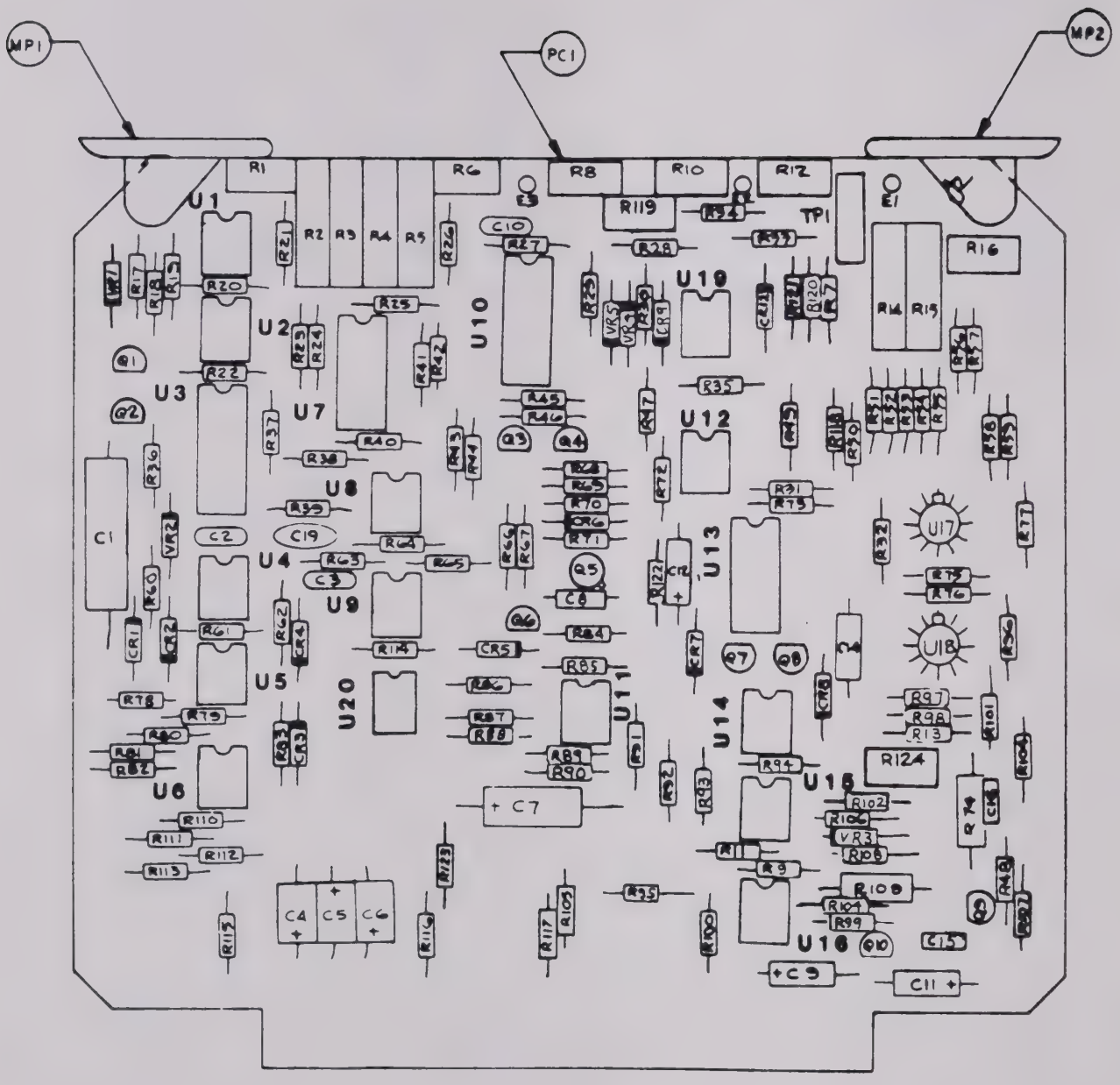

Figure 6-21. Sweep and VCO Circuit Card Assembly 1A11

Fig. & ref no.	Description	Mfr code	Mfr part no.	Halcyon part no.	SMR code
Fig. 6-22	INTEGRATION AND HITS PROCESS CIRCUIT CARD ASSY (See fig. 6-2, ref no. A12, for nha)	51701		8000-1038-00	PAFFP
C1	CAPACITOR, Fixed, electrolytic, 10 uF, 10%, 20 vdcw	56289	150D106X9020B2	1503-0181-00	PAFZZN
C2	Same as C1				
C3	CAPACITOR, Fixed, plastic, 0.1 uF, 1%, 200 vdcw	27556	BA2C104F	1502-0025-00	PAFZZN
C4	CAPACITOR, Fixed, mica, 0.001 uF, 5%, 500 vdcw	00853	D155C102JP	1500-0156-00	PAFZZN
C5	CAPACITOR, Fixed, ceramic, 0.1 uF, 10%, 100 vdcw	81349	CK06BX104K	1501-0074-00	PAFZZN
C6	Same as C5				
C7	Same as C4				
C8	Same as C4				
C9	Same as C5				
C10 thru C12	CAPACITOR, Fixed, electrolytic, 10 uF, 20%, 15 vdcw	56289	151D116X0015X2	1505-0007-00	PAFZZN
C13	CAPACITOR, Fixed, mica, 470 pF, 5%, 500 vdcw	00853	D155C471JP	1500-0147-00	PAFZZN
C14 thru C16	Same as C10				
C17	Same as C3				
C18	Same as C13				
C19	Same as C3				
C20	Same as C13				
C21	Same as C1				
C22	CAPACITOR, Fixed, electrolytic, 22 uF, 10%, 15 vdcw	56289	150D226X9015B2	1503-0125-00	PAFZZN
IC1	INTEGRATED CIRCUIT	32293	IH5018	3132-0004-03	PAFZZN
IC2	INTEGRATED CIRCUIT	04713	MC1458CP1	3131-0005-00	PAFZZN
IC3	INTEGRATED CIRCUIT	01295	SN72301AP	3131-0001-01	PAFZZN
IC4	Same as IC3				
IC5	INTEGRATED CIRCUIT	04713	MC14538B	3130-4538-00	PAFZZN
IC6	INTEGRATED CIRCUIT	04713	MC14001CP	3130-4001-00	PAFZZN
IC7	Same as IC5				
IC8	Same as IC5				
IC9	INTEGRATED CIRCUIT	01295	SN74L00N	3130-0500-00	PAFZZN
IC10	INTEGRATED CIRCUIT	04713	MC14049CP	3130-4049-00	PAFZZN
IC11	Same as IC5				
IC12	INTEGRATED CIRCUIT	04713	MC14027CP	3130-4027-00	PAFZZN
IC13	Same as IC6				
IC14	INTEGRATED CIRCUIT	04713	MC14011CP	3130-4011-00	PAFZZN
IC15	Same as IC9				
IC16	Same as IC5				
IC17	Same as IC5				
IC18	Same as IC10				
IC19	Same as IC12				
IC20	INTEGRATED CIRCUIT	50088	MK5009N	3130-5009-00	PAFZZN
IC21	Same as IC20				
IC22	INTEGRATED CIRCUIT	04713	MC14518CP	3130-4518-00	PAFZZN
IC23	Same as IC14				
IC24	Same as IC6				
IC25	Same as IC10				
IC26	Same as IC9				
IC27	INTEGRATED CIRCUIT	01295	SN74L42N	3130-0542-00	PAFZZN
MP1	EXTRACTOR, Electrical card	18677	S-203	1401-0011-00	PAFZZN
MP2	Same as MP1				
PC1	PRINTED WIRING BOARD	51701		1700-1038-00	XAFZZ

Fig. & ref no.	Description	Mfr code	Mfr part no.	Halcyon part no.	SMR code
Fig. 6-22	(Continued)				
R1 thru R3	RESISTOR, Variable, 20k ohms, 20%	73138	72XWR20K	4750-0011-00	PAFZZN
R4 thru R9	RESISTOR, Variable, 5k ohms, 20%	73138	72XWR5K	4750-0009-00	PAFZZN
R10	RESISTOR, Fixed, composition, 100k ohms, 5%, 1/4 w	81349	RC07GF104J	4700-0445-00	PAFZZN
R11	RESISTOR, Fixed, film, 10k ohms, 1%, 1/8 w	16299	NA5510K1%	4703-0289-00	PAFZZN
R12	RESISTOR, Fixed, film, 4.64k ohms, 1%, 1/8 w	16299	NA554.64K1%	4703-0257-00	PAFZZN
R13	RESISTOR, Fixed, film, 16.2k ohms, 1%, 1/8 w	16299	NA5516.2K1%	4703-0309-00	PAFZZN
R14	RESISTOR, Fixed, film, 100k ohms, 1%, 1/8 w	16299	NA55100K1%	4703-0385-00	PAFZZN
R15	Same as R14				
R16	RESISTOR, Fixed, composition, 150k ohms, 5%, 1/4 w	81349	RC07GF154J	4700-0449-00	PAFZZN
R17	Same as R16				
R18	RESISTOR, Fixed, film, 3.16k ohms, 1%, 1/8 w	16299	NA553.16K1%	4703-0241-00	PAFZZN
R19	RESISTOR, Fixed, film, 26.1k ohms, 1%, 1/8 w	16299	NA5526.1K1%	4703-0329-00	PAFZZN
R20	RESISTOR, Fixed, film, 12.7k ohms, 1%, 1/8 w	16299	NA5512.7K1%	4703-0299-00	PAFZZN
R21	Same as R11				
R22	RESISTOR, Fixed, film, 9.53k ohms, 1%, 1/8 w	16299	NA559.53K1%	4703-0287-00	PAFZZN
R23	Same as R11				
R24	RESISTOR, Fixed, composition, 10k ohms, 5%, 1/4 w	81349	RC07GF103J	4700-0421-00	PAFZZN
R25	RESISTOR, Fixed, film, 17.8k ohms, 1%, 1/8 w	16299	NA5517.8K1%	4703-0313-00	PAFZZN
R26	Same as R24				
R27	RESISTOR, Fixed, film, 11.8k ohms, 1%, 1/8 w	16299	NA5511.8K1%	4703-0296-00	PAFZZN
R28	Same as R20				
R29	Same as R16				
R30	Same as R14				
R31	Same as R20				
R32	Same as R20				
R33	Same as R10				
R34	Same as R20				
R35	Same as R20				
R36	RESISTOR, Fixed, film, 30.9k ohms, 1%, 1/8 w	16299	NA5530.9K1%	4703-0336-00	PAFZZN
R37	Same as R36				
R38	Same as R10				
R39	Same as R10				
R40	RESISTOR, Fixed, composition, 2 megohms, 5%, 1/4 w	81349	RC07GF205J	4700-0476-00	PAFZZN
R41	RESISTOR, Fixed, composition, 2.7 megohms, 5%, 1/4 w	81349	RC07GF275J	4700-0479-00	PAFZZN
R42	Same as R10				
R43	RESISTOR, Fixed, composition, 100 ohms, 5%, 1/4 w	81349	RC07GF101J	4700-0373-00	PAFZZN
R44	Same as R10				
R45	RESISTOR, Fixed, composition, 22k ohms, 5%, 1/4 w	81349	RC07GF223J	4700-0429-00	PAFZZN
R46	Same as R10				
R47	RESISTOR, Fixed, film, 34.8k ohms, 1%, 1/8 w	16299	NA5534.8K1%	4703-0341-00	PAFZZN
R48	RESISTOR, Fixed, composition, 1.5 megohms, 5%, 1/4 w	81349	RC07GF155J	4700-0473-00	PAFZZN
R49	Same as R48				
VR1	SEMICONDUCTOR DEVICE, Diode	81349	1N751A	4802-0751-00	PAFZZN
VR2	Same as VR1				
VR3	SEMICONDUCTOR DEVICE, Diode	81349	1N758A	4802-0758-00	PAFZZN
XIC1 thru XIC4	SOCKET, Plug-in electronic components, 8 contacts	91506	208-AG39D	2101-0000-00	PAFZZN

Fig. & ref no.	Description	Mfr code	Mfr part no.	Halcyon part no.	SMR code
Fig. 6-22	(Continued)				
XIC5	SOCKET, Plug-in electronic components, 16 contacts	91506	216-AG39D	2101-0000-02	PAFZZN
XIC6	SOCKET, Plug-in electronic components, 14 contacts	91506	214-AG39D	2101-0000-01	PAFZZN
XIC7	Same as XIC5				
XIC8	Same as XIC5				
XIC9	Same as XIC6				
XIC10 thru XIC12	Same as XIC5				
XIC13 thru XIC15	Same as XIC6				
XIC16 thru XIC22	Same as XIC5				
XIC23	Same as XIC6				
XIC24	Same as XIC6				
XIC25	Same as XIC5				
XIC26	Same as XIC6				
XIC27	Same as XIC5				
Y1	CRYSTAL UNIT, Quartz, 1.0035 MHz, 0.005%	51701		2300-0003-00	PAFZZN

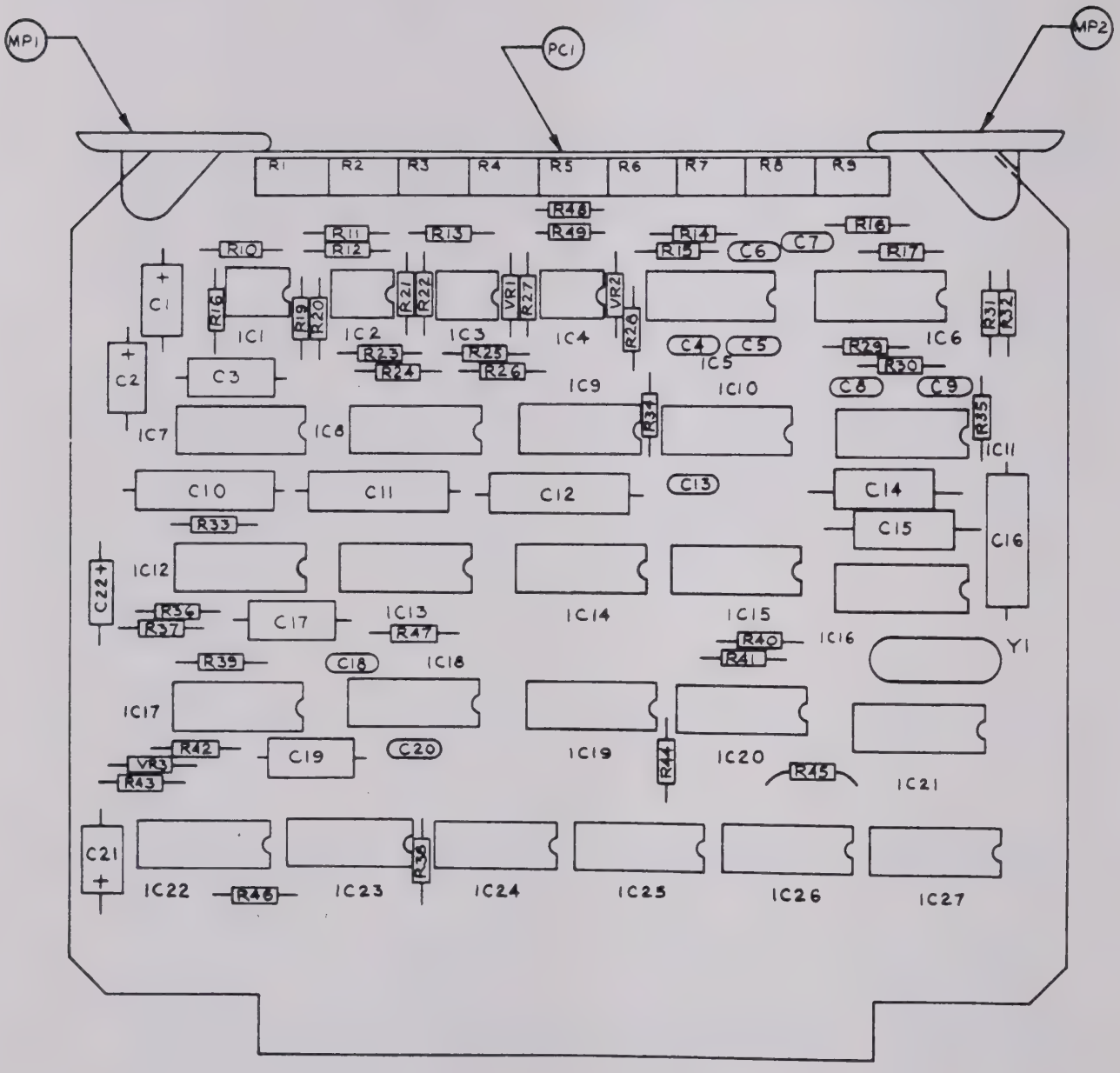

Figure 6-22. Integration and Hits Process Circuit Card Assembly 1A12

Fig. & ref no.	Description	Mfr code	Mfr part no.	Halcyon part no.	SMR code
Fig. 6-23	AUTORANGING AND TLP CIRCUIT CARD ASSY (See fig. 6-2, ref no. A13, for nha)	51701		8000-1039-00	PAFFFP
C1	CAPACITOR, Fixed, mica, 18 pF, 5%, 500 vdcw	00853	D155C180JP	1500-0058-00	PAFZZN
C2	CAPACITOR, Fixed, mica, 10 pF, 5%, 500 vdcw	00853	D155C100JP	1500-0055-00	PAFZZN
C3 thru C5	CAPACITOR, Fixed, electrolytic, 10 uF, -10 +50%, 35 vdcw (Manufactured by Elna America, Inc., 153 E. Savarona Way, Carson City, California 90746)	NONE	35TL10UF	1504-0052-00	PAFZZN
C6	CAPACITOR, Fixed, electrolytic, 100 uF, 10%, 20 vdcw	56289	150D107X9020S2	1503-0193-00	PAFZZN
C7	CAPACITOR, Fixed, ceramic, 0.01 uF, 10%, 200 vdcw	81349	CK06BX103K	1501-0062-00	PAFZZN
CR1	SEMICONDUCTOR DEVICE, Diode	81349	1N4148	4802-4148-00	PAFZZN
IC1	INTEGRATED CIRCUIT	04713	MC1458CP1	3131-0005-00	PAFZZN
IC2	INTEGRATED CIRCUIT	32293	IH5018	3132-0004-03	PAFZZN
IC3	Same as IC1				
IC4	INTEGRATED CIRCUIT	01295	SN72301AP	3131-0001-01	PAFZZN
IC5	Same as IC4				
IC6	Same as IC2				
IC7	INTEGRATED CIRCUIT	04713	MC14518CP	3130-4518-00	PAFZZN
IC8	INTEGRATED CIRCUIT	01295	SN74L73N	3130-0573-00	PAFZZN
IC9	INTEGRATED CIRCUIT	04713	MC14049CP	3130-4049-00	PAFZZN
IC10	INTEGRATED CIRCUIT	01295	SN74L90N	3130-0590-00	PAFZZN
IC11	INTEGRATED CIRCUIT	04713	MC14011CP	3130-4011-00	PAFZZN
IC12	Same as IC11				
IC13	INTEGRATED CIRCUIT	04713	MC14001CP	3130-4001-00	PAFZZN
IC14	Same as IC11				
IC15	Same as IC11				
IC16	Same as IC13				
IC17	INTEGRATED CIRCUIT	01295	SN74L00N	3130-0500-00	PAFZZN
MP1	EXTRACTOR, Electrical card	18677	S-203	1401-0011-00	PAFZZN
MP2	Same as MP1				
PC1	PRINTED WIRING BOARD	51701		1700-1039-00	XAFZZ
Q1 thru Q3	TRANSISTOR	27014	2N3906	4800-3906-00	PAFZZN
R1	RESISTOR, Fixed, film, 10.2k ohms, 1%, 1/8 w	16299	NA5510.2K1%	4703-0290-00	PAFZZN
R2	RESISTOR, Fixed, film, 4.02k ohms, 1%, 1/8 w	16299	NA554.02K1%	4703-0251-00	PAFZZN
R3	RESISTOR, Fixed, film, 5.11k ohms, 1%, 1/8 w	16299	NA555.11K1%	4703-0261-00	PAFZZN
R4	RESISTOR, Fixed, film, 6.49k ohms, 1%, 1/8 w	16299	NA556.49K1%	4703-0271-00	PAFZZN
R5	RESISTOR, Fixed, film, 8.06k ohms, 1%, 1/8 w	16299	NA558.06K1%	4703-0280-00	PAFZZN
R6	RESISTOR, Fixed, film, 4.53k ohms, 1%, 1/8 w	16299	NA554.53K1%	4703-0256-00	PAFZZN
R7	RESISTOR, Fixed, film, 3.65k ohms, 1%, 1/8 w	16299	NA553.65K1%	4703-0247-00	PAFZZN
R8	RESISTOR, Fixed, film, 9.09k ohms, 1%, 1/8 w	16299	NA559.09K1%	4703-0285-00	PAFZZN
R9	RESISTOR, Fixed, film, 7.15k ohms, 1%, 1/8 w	16299	NA557.15K1%	4703-0275-00	PAFZZN
R10	RESISTOR, Fixed, film, 5.76k ohms, 1%, 1/8 w	16299	NA555.76K1%	4703-0266-00	PAFZZN
R11	RESISTOR, Fixed, composition, 33k ohms, 5%, 1/4 w	81349	RC07GF333J	4700-0433-00	PAFZZN
R12	RESISTOR, Fixed, film, 1.37k ohms, 1%, 1/8 w	16299	NA551.37K1%	4703-0206-00	PAFZZN
R13	RESISTOR, Fixed, film 432 ohms, 1%, 1/8 w	16299	NA55432R1%	4703-0158-00	PAFZZN
R14	RESISTOR, Fixed, film, 137 ohms, 1%, 1/8 w	16299	NA55137R1%	4703-0110-00	PAFZZN
R15	RESISTOR, Fixed, film, 63.4 ohms, 1%, 1/8 w	16299	NA5563.4R1%	4703-0078-00	PAFZZN
R16	RESISTOR, Fixed, film, 3.83k ohms, 1%, 1/8 w	16299	NA553.83K1%	4703-0249-00	PAFZZN
R17	RESISTOR, Fixed, composition, 22k ohms, 5%, 1/4 w	81349	RC07GF223J	4700-0429-00	PAFZZN
R18	Same as R17				
R19	RESISTOR, Fixed, composition, 100k ohms, 5%, 1/4 w	81349	RC07GF104J	4700-0445-00	PAFZZN
R20	Same as R19				
R21	RESISTOR, Fixed, film, 2k ohms, 1%, 1/8 w	16299	NA552K1%	4703-0222-00	PAFZZN
R22	RESISTOR, Fixed, composition, 2.2k ohms, 5%, 1/4 w	81349	RC07GF222J	4700-0405-00	PAFZZN

Fig. & ref no.	Description	Mfr code	Mfr part no.	Halcyon part no.	SMR code
Fig. 6-23	(Continued)				
R23	Same as R1				
R24	Same as R21				
R25	RESISTOR, Fixed, film, 1k ohms, 1%, 1/8 w	16299	NA551K1%	4703-0193-00	PAFZZN
R26	RESISTOR, Fixed, film, 10k ohms, 1%, 1/8 w	16299	NA5510K1%	4703-0289-00	PAFZZN
R27	RESISTOR, Fixed, Composition, 120k ohms, 5%, 1/4 w	81349	RC07GF124J	4700-0447-00	PAFZZN
R28	RESISTOR, Fixed, film, 95.3k ohms, 1%, 1/8 w	16299	NA5595.3K1%	4703-0383-00	PAFZZN
R29	Same as R25				
R30	Same as R26				
R31	Same as R19				
R32	Same as R19				
R33	Same as R25				
R34	RESISTOR, Fixed, composition, 10k ohms, 5%, 1/4 w	81349	RC07GF103J	4700-0421-00	PAFZZN
R35	RESISTOR, Fixed, composition, 2.7k ohms, 5%, 1/4 w	81349	RC07GF272J	4700-0407-00	PAFZZN
R36	RESISTOR, Fixed, composition, 180 ohms, 5%, 1/4 w	81349	RC07GF181J	4700-0379-00	PAFZZN
R37	Same as R34				
R38	Same as R35				
R39	Same as R36				
R40	Same as R34				
R41	Same as R35				
R42	Same as R36				
R43	Same as R19				
R44	Same as R19				
R45	Same as R34				
R46	RESISTOR, Variable, 1k ohms, 10%	71450	190PC102A	4750-0027-00	PAFZZN
S1	SWITCH ASSY, Thumbwheel, 2 stations	23880	2X2250-2000	5100-0013-00	PAFZZN
VR1	SEMICONDUCTOR DEVICE, Diode	81349	1N751A	4802-0751-00	PAFZZN
XIC1 thru XIC6	SOCKET, Plug-in electronic components, 8 contacts	91506	208-AG39D	2101-0000-00	PAFZZN
XIC7	SOCKET, Plug-in electronic components, 16 contacts	91506	216-AG39D	2101-0000-02	PAFZZN
XIC8	SOCKET, Plug-in electronic components, 14 contacts	91506	214-AG39D	2101-0000-01	PAFZZN
XIC9	Same as XIC7				
XIC10 thru XIC16	Same as XIC8				

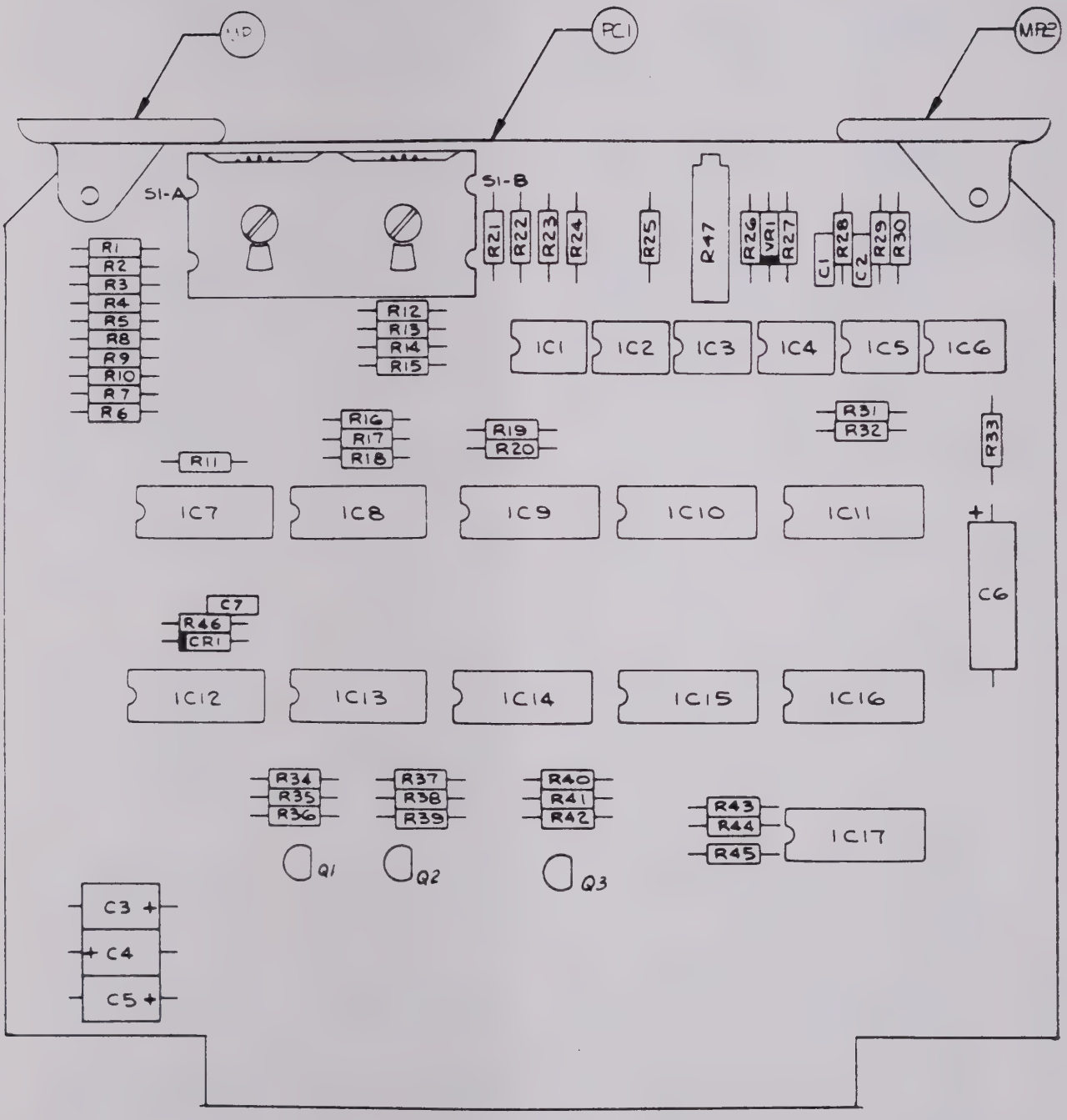

Figure 6-23. Autoranging and TLP Circuit Card Assembly 1A13

Fig. & ref no.	Description	Mfr code	Mfr part no.	Halcyon part no.	SMR code
Fig. 6-24	FADE OUT CIRCUIT CARD ASSY (See fig. 6-2, ref no. A14, for nha)	51701		8000-0001-13	PAFFFP
C1	CAPACITOR, Fixed, electrolytic, 10 uF, -10 +50% 35 vdcw (Manufactured by Elna America, Inc., 153 E. Savarona Way, Carson City, California 90746)	NONE	35TL10UF	1504-0052-00	PAFZZN
C2	Same as C1				
C3	CAPACITOR, Fixed, electrolytic, 100 uF, 10%, 20 vdcw	56289	150D107X9020S2	1503-0193-00	PAFZZN
C4	CAPACITOR, Fixed, ceramic, 0.01 uF, 10%, 200 vdcw	81349	CK06BX103K	1501-0062-00	PAFZZN
C5	Same as C4				
C6	CAPACITOR, Fixed, ceramic, 0.1 uF, 10%, 100 vdcw	81349	CK06BX104K	1501-0074-00	PAFZZN
C7	Same as C4				
C8	Same as C4				
C9	CAPACITOR, Fixed, mica, 3000 pF, 1%, 500 vdcw	00853	D195C302FO	1500-5209-00	PAFZZN
C10	CAPACITOR, Fixed, mica, 1500 pF, 5%, 300 vdcw	00853	D153C152JP	1500-0201-00	PAFZZN
C11	CAPACITOR, Fixed, electrolytic, 22 uF, 10%, 15 vdcw	56289	150D226X9015B2	1503-0125-00	PAFZZN
CR1	SEMICONDUCTOR DEVICE, Diode	81349	1N4148	4802-4148-00	PAFZZN
CR2	Same as CR1				
IC1	INTEGRATED CIRCUIT	04713	MC1458CP1	3131-0005-00	PAFZZN
IC2	Same as IC1				
IC3	INTEGRATED CIRCUIT	01295	SN72301AL	3131-0001-00	PAFZZN
IC4	INTEGRATED CIRCUIT	04713	MC14001CP	3130-4001-00	PAFZZN
IC5 thru IC7	Same as IC1				
IC8 thru IC10	INTEGRATED CIRCUIT	32293	IH5018	3132-0004-03	PAFZZN
IC11	Same as IC1				
MP1	EXTRACTOR, Electrical card	18677	S-203	1401-0011-00	PAFZZN
MP2	Same as MP1				
PC1	PRINTED WIRING BOARD	51701		1700-0001-13	XAFZZ
R1	RESISTOR, Fixed, film, 4.99k ohms, 1%, 1/8 w	16299	NA554.99K1%	4703-0260-00	PAFZZN
R2	RESISTOR, Fixed, film, 10k ohms, 1%, 1/8 w	16299	NA5510K1%	4703-0289-00	PAFZZN
R3	Same as R2				
R4	RESISTOR, Fixed, composition, 100 ohms, 5%, 1/4 w	81349	RC07GF101J	4700-0373-00	PAFZZN
R5	Same as R2				
R6	Same as R2				
R7	RESISTOR, Fixed, film, 78.7k ohms, 1%, 1/8 w	16299	NA5578.7K1%	4703-0375-00	PAFZZN
R8	RESISTOR, Fixed, film, 5.49k ohms, 1%, 1/8 w	16299	NA555.49K1%	4703-0264-00	PAFZZN
R9	RESISTOR, Fixed, film, 6.04k ohms, 1%, 1/8 w	16299	NA556.04K1%	4703-0268-00	PAFZZN
R10	Same as R2				
R11	RESISTOR, Fixed, film, 2.1k ohms, 1%, 1/8 w	16299	NA552.1K1%	4703-0224-00	PAFZZN
R12	Same as R7				
R13	RESISTOR, Fixed, film, 4.32k ohms, 1%, 1/8 w	16299	NA554.32K1%	4703-0254-00	PAFZZN
R14	RESISTOR, Fixed, film, 8.06k ohms, 1%, 1/8 w	16299	NA558.06K1%	4703-0280-00	PAFZZN
R15	Same as R2				
R16	RESISTOR, Fixed, composition, 10k ohms, 5%, 1/4 w	81349	RC07GF103J	4700-0421-00	PAFZZN
R17	RESISTOR, Fixed, film, 3.83k ohms, 1%, 1/8 w	16299	NA553.83K1%	4703-0249-00	PAFZZN
R18	Not used				
R19	RESISTOR, Fixed, composition, 20k ohms, 5%, 1/4 w	81349	RC07GF203J	4700-0428-00	PAFZZN
R20	RESISTOR, Fixed Composition, 2.2k ohms, 5%, 1/4 w	81349	RC07GF222J	4700-0405-00	PAFZZN
R21	RESISTOR, Fixed, composition, 1k ohms, 5%, 1/4 w	81349	RC07GF102J	4700-0397-00	PAFZZN
R22	RESISTOR, Variable, 5k ohms, 10%	71450	190PC502A	4750-0029-00	PAFZZN

Fig. & ref no.	Description	Mfr code	Mfr part no.	Halcyon part no.	SMR code
Fig. 6-24	(Continued)				
R23	RESISTOR, Variable 50k ohms, 10%	71450	190PC503A	4750-0032-00	PAFZZN
R24	RESISTOR, Fixed, film, 100k ohms, 1%, 1/8 w	16299	NA55100K1%	4703-0385-00	PAFZZN
R25	RESISTOR, Fixed, film, 18.2k ohms, 1%, 1/8w	16299	NA5518.2K1%	4703-0314-00	PAFZZN
R26 thru R31	Same as R2				
R32	RESISTOR, Fixed, film, 16.9k ohms, 1%, 1/8 w	16299	NA5516.9K1%	4703-0311-00	PAFZZN
R33	RESISTOR, Fixed, film, 6.81k ohms, 1%, 1/8 w	16299	NA556.81K1%	4703-0273-00	PAFZZN
R34	Same as R23				
R35	RESISTOR, Fixed, film, 200k ohms, 1%, 1/8 w	16299	NA55200K1%	4703-0414-00	PAFZZN
R36	RESISTOR, Fixed, film, 24.3k ohms, 1%, 1/8 w	16299	NA5524.3K1%	4703-0326-00	PAFZZN
R37	Same as R22				
R38	RESISTOR, Fixed, film, 10.7k ohms, 1%, 1/8 w	16299	NA5510.7K1%	4703-0292-00	PAFZZN
R39 thru R42	Same as R2				
R43	RESISTOR, Fixed, film, 7.5k ohms, 1%, 1/8 w	16299	NA557.5K1%	4703-0277-00	PAFZZN
R44	Same as R43				
VR1	SEMICONDUCTOR DEVICE, Diode	81349	1N751A	4802-0751-00	PAFZZN
XIC1 thru XIC3	SOCKET, Plug-in electronic components, 8 contacts	91506	208-AG39D	2101-0000-00	PAFZZN
XIC4	SOCKET, Plug-in electronic components, 14 contacts	91506	214-AG39D	2101-0000-01	PAFZZN
XIC5 thru XIC11	Same as XIC1				

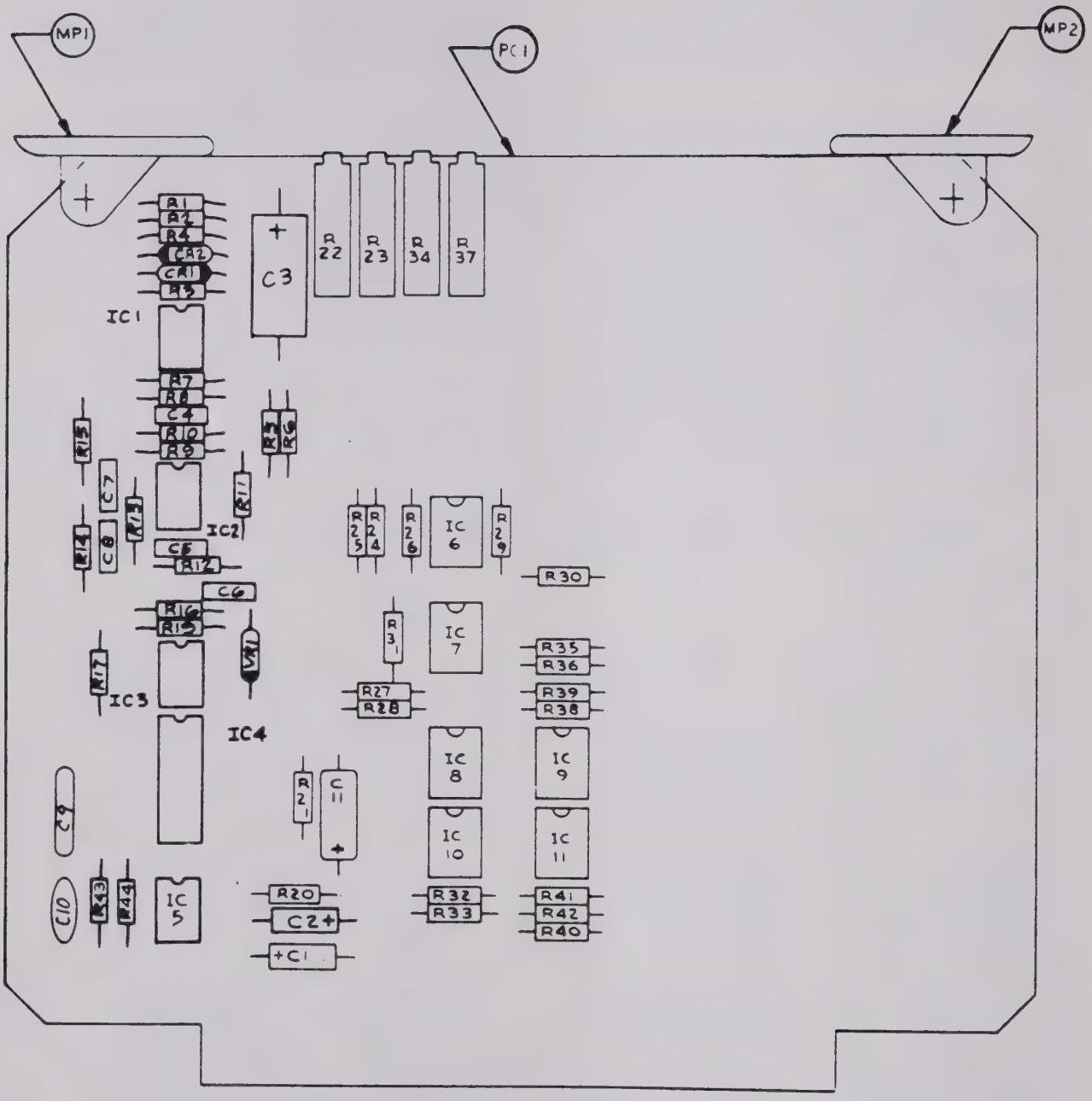

Figure 6-24. Fade Out Circuit Card Assembly 1A14

Fig. & ref no.	Description	Mfr code	Mfr part no.	Halcyon part no.	SMR code
Fig 6-25	DIGITAL EVENT BUFFERS CIRCUIT CARD ASSY (Used on Model 520B2-07) (See fig. 6-2, ref no. A15, for nha)	51701		8000-0003-91	
C1 thru C3	CAPACITOR, Fixed, plastic, 10 uF, 10%, 20 vdcw	56289	150D106X9020B2	1503-0181-00	PAFZZN
IC1	INTEGRATED CIRCUIT	04713	MC1458CP1	3131-0005-00	PAFZZN
IC2	INTEGRATED CIRCUIT	04713	MC14518CP	3130-4518-00	PAFZZN
IC3	INTEGRATED CIRCUIT	04713	MC14049CP	3130-4049-00	PAFZZN
MP1	EXTRACTOR, Electrical card	18677	S-203	1401-0011-00	PAFZZN
MP2	Same as MP1				
PC1	PRINTED WIRING BOARD	51701		1700-0003-91	XAFZZ
XIC1	SOCKET, Plug-in electronic components, 8 contacts	91506	208-AG39D	2101-0000-00	XAFZZ
XIC2	SOCKET, Plug-in electronic components, 16 contacts	91506	216-AG39D	2101-0000-02	PAFZZN
XIC3	Same as XIC2				

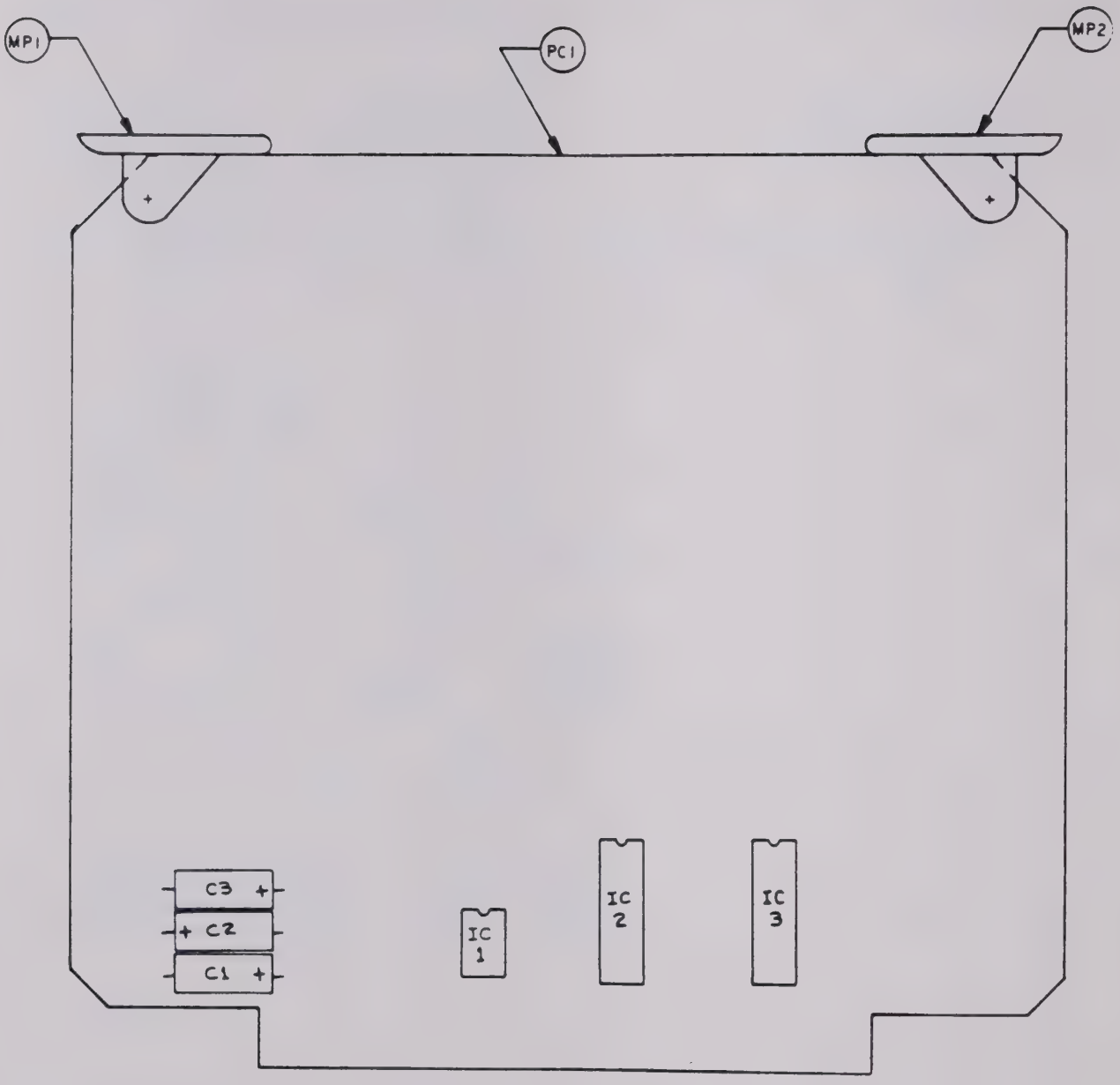

Figure 6-25. Digital Event Buffers Circuit Card Assembly 1A15
(Used on Model 520B2-07)

Fig. & ref no.	Description	Mfr code	Mfr part no.	Halcyon part no.	SMR code
Fig. 6-26	P/AR GENERATOR AND RECEIVER CIRCUIT CARD ASSY (Used on Model 520B2-17) (See fig. 6-2, ref no. A15, for nha)	51701		8000-0003-76	PAFFFP
C1 thru C8	CAPACITOR, Fixed, electrolytic, 10 uF, 10%, 20 vdcw	56289	150D106X9020B2	1503-0181-00	PAFZZN
C9	CAPACITOR, Fixed, plastic, 1 uF, 1%, 200 vdcw	27556	BA2C105F	1502-0037-00	PAFZZN
C10	CAPACITOR, Fixed, plastic, 0.25 uF, 1%, 200 vdcw	27556	BA2C254F	1502-0046-00	PAFZZN
C11	Same as C9				
C12	CAPACITOR, Fixed, plastic, 0.22 uF, 1%, 200 vdcw	27556	BA2C224F	1502-0029-00	PAFZZN
C13	CAPACITOR, Fixed, ceramic, 0.1 uF, 10%, 100 vdcw	81349	CK06BX104K	1501-0074-00	PAFZZN
C14 thru C17	CAPACITOR, Fixed, mica, 0.001 uF, 1%, 100 vdcw	14655	CD15FA102F03	1505-0008-00	PAFZZN
C18	CAPACITOR, Fixed, mica, 20 pF, 5%, 500 vdcw	00853	D155C200JP	1500-0059-00	PAFZZN
C19	Same as C1				
C20 thru C22	CAPACITOR, Fixed, plastic, 0.01 uF, 1%, 200 vdcw	27556	BA2C103F	1502-0013-00	PAFZZN
C23	CAPACITOR, Fixed, mica, 100 pF, 5%, 500 vdcw	00853	D155C101JP	1500-0077-00	PAFZZN
C24	Same as C10				
CR1 thru CR8	SEMICONDUCTOR DEVICE, Diode	81349	1N4148	4802-4148-00	PAFZZN
IC1 thru IC3	INTEGRATED CIRCUIT	04713	MC1458CP1	3131-0005-00	PAFZZN
IC4	INTEGRATED CIRCUIT	01295	TL082P	3131-0008-00	PAFZZN
IC5	Same as IC4				
IC6	INTEGRATED CIRCUIT	01295	SN72302L	3131-0002-00	PAFZZN
IC7	Same as IC1				
IC8	INTEGRATED CIRCUIT	01295	SN72301AP	3131-0001-01	PAFZZN
IC9	INTEGRATED CIRCUIT	32293	IH5018	3132-0004-03	PAFZZN
IC10	Same as IC1				
IC11	Same as IC1				
IC12	INTEGRATED CIRCUIT	04713	MC14518CP	3130-4518-00	PAFZZN
IC13	INTEGRATED CIRCUIT	04713	MC14049CP	3130-4049-00	PAFZZN
IC14	Same as IC1				
IC15	INTEGRATED CIRCUIT	04713	MC1408L-8	3130-1408-00	PAFZZN
IC16	INTEGRATED CIRCUIT	04713	68308	3135-0000-01	PAFZZN
IC17	INTEGRATED CIRCUIT	04713	MC14520CP	3130-4520-00	PAFZZN
IC18	Same as IC17				
IC19	Same as IC1				
IC20	Same as IC9				
IC21	INTEGRATED CIRCUIT	04713	MC14011CP	3130-4011-00	PAFZZN
IC22	INTEGRATED CIRCUIT	04713	MC14001CP	3130-4001-00	PAFZZN
IC23	Same as IC21				
MP1	EXTRACTOR, Electrical card	18677	S-203	1401-0011-00	PAFZZN
MP2	Same as MP1				
PC1	PRINTED WIRING BOARD	51701		1700-0003-76	XAFZZ
Q1	TRANSISTOR	27014	2N3906	4800-3906-00	PAFZZN
Q2	TRANSISTOR	27014	2N3904	4800-3904-00	PAFZZN
Q3	Same as Q1				

Fig. & ref no.	Description	Mfr code	Mfr part no.	Halcyon part no.	SMR code
Fig. 6-26	(Continued)				
Q4	Same as Q2				
Q5	TRANSISTOR	04713	2N4392	4800-4392-00	PAFZZN
R1	RESISTOR, Variable, 10k ohms, 10%	71450	190PC103A	4750-0030-00	PAFZZN
R2	RESISTOR, Variable, 1k ohms, 10%	71450	190PC102A	4750-0027-00	PAFZZN
R3	RESISTOR, Fixed, film, 2.1k ohms, 1%, 1/8 w	16299	NA552.1K1%	4703-0224-00	PAFZZN
R4	RESISTOR, Fixed, film, 42.2k ohms, 1%, 1/8 w	16299	NA5542.2K1%	4703-0349-00	PAFZZN
R5	RESISTOR, Fixed, film, 100k ohms, 1%, 1/8 w	16299	NA55100K1%	4703-0385-00	PAFZZN
R6	Same as R4				
R7	RESISTOR, Fixed, film, 10k ohms, 1%, 1/8 w	16299	NA5510K1%	4703-0289-00	PAFZZN
R8	Same as R7				
R9	RESISTOR, Fixed, film, 4.99k ohms, 1%, 1/8 w	16299	NA554.99K1%	4703-0260-00	PAFZZN
R10	Same as R7				
R11	Same as R7				
R12	Same as R9				
R13	RESISTOR, Fixed, film, 11k ohms, 1%, 1/8 w	16299	NA5511K1%	4703-0293-00	PAFZZN
R14	RESISTOR, Fixed, film, 2.61k ohms, 1%, 1/8 w	16299	NA552.61K1%	4703-0233-00	PAFZZN
R15	RESISTOR, Fixed, film, 21.5k ohms, 1%, 1/8 w	16299	NA5521.5K1%	4703-0321-00	PAFZZN
R16	Same as R7				
R17	RESISTOR, Fixed, film, 75k ohms, 1%, 1/8 w	16299	NA5575K1%	4703-0373-00	PAFZZN
R18	RESISTOR, Fixed, film, 71.5k ohms, 1%, 1/8 w	16299	NA5571.5K1%	4703-0371-00	PAFZZN
R19	RESISTOR, Fixed, composition, 1k ohms, 5%, 1/4 w	81349	RC07GF102J	4700-0397-00	PAFZZN
R20	RESISTOR, Fixed, composition, 10k ohms, 5%, 1/4 w	81349	RC07GF103J	4700-0421-00	PAFZZN
R21	RESISTOR, Fixed, composition, 100 ohms, 5%, 1/4 w	81349	RC07GF101J	4700-0373-00	PAFZZN
R22	Same as R7				
R23	Same as R21				
R24	RESISTOR, Fixed, composition, 220 ohms, 5%, 1/4 w	81349	RC07GF221J	4700-0381-00	PAFZZN
R25	RESISTOR, Fixed, composition, 100k ohms, 5%, 1/4 w	81349	RC07GF104J	4700-0445-00	PAFZZN
R26	Same as R7				
R27	RESISTOR, Fixed, film, 4.32k ohms, 1%, 1/8 w	16299	NA554.32K1%	4703-0254-00	PAFZZN
R28	RESISTOR, Fixed, film, 1.5 megohms, 1%, 1/4 w	16299	NA601.5M1%	4704-0498-00	PAFZZN
R29	Same as R28				
R30	RESISTOR, Fixed, film, 750k ohms, 1%, 1/4 w	16299	NA60750K1%	4704-0469-00	PAFZZN
R31	RESISTOR, Fixed, film, 20.5k ohms, 1%, 1/8 w	16299	NA5520.5K1%	4703-0319-00	PAFZZN
R32	RESISTOR, Fixed, film, 5.76k ohms, 1%, 1/8 w	16299	NA555.76K1%	4703-0266-00	PAFZZN
R33	Same as R18				
R34	Same as R21				
R35	Same as R7				
R36	Same as R7				
R37	RESISTOR, Fixed, composition, 27k ohms, 5%, 1/4 w	81349	RC07GF273J	4700-0431-00	PAFZZN
R38	Same as R19				
R39	RESISTOR, Fixed, composition, 3.9k ohms, 5%, 1/4 w	81349	RC07GF392J	4700-0411-00	PAFZZN
R40	RESISTOR, Fixed, composition, 22k ohms, 5%, 1/4 w	81349	RC07GF223J	4700-0429-00	PAFZZN
R41	Same as R40				
R42	RESISTOR, Fixed, composition, 6.8k ohms, 5%, 1/4 w	81349	RC07GF682J	4700-0417-00	PAFZZN
R43	RESISTOR, Fixed, film, 243k ohms, 1%, 1/8 w	16299	NA55243K1%	4703-0422-00	PAFZZN
R44	RESISTOR, Fixed, film, 34.8k ohms, 1%, 1/8 w	16299	NA5534.8K1%	4703-0341-00	PAFZZN
R45	RESISTOR, Fixed, film, 487k ohms, 1%, 1/8 w	16299	NA55487K1%	4703-0451-00	PAFZZN
R46	Same as R43				
R47	Same as R44				
R48	Same as R45				
R49 thru R51	Same as R7				

Fig. & ref no.	Description	Mfr code	Mfr part no.	Halcyon part no.	SMR code
Fig. 6-26	(Continued)				
R52	RESISTOR, Fixed, composition, 2.7 megohms, 5%, 1/4 w	81349	RC07GF275J	4700-0479-00	PAFZZN
R53	Same as R20				
R54 thru R60	Not used				
R61	RESISTOR, Fixed, film, 3.48k ohms, 1%, 1/8 w	16299	NA553.48K1%	4703-0245-00	PAFZZN
R62 thru R64	RESISTOR, Fixed, film, 1k ohms, 1%, 1/8 w	16299	NA551K1%	4703-0193-00	PAFZZN
R65	RESISTOR, Fixed, film, 4.87k ohms, 1%, 1/8 w	16299	NA554.87K1%	4703-0259-00	PAFZZN
R66	RESISTOR, Fixed, film, 681 ohms, 1%, 1/8 w	16299	NA55681R1%	4703-0177-00	PAFZZN
R67	Same as R61				
R68	RESISTOR, Fixed, film, 4.12k ohms, 1%, 1/8 w	16299	NA554.12K1%	4703-0252-00	PAFZZN
R69	RESISTOR, Fixed, film, 4.64k ohms, 1%, 1/8 w	16299	NA554.64K1%	4703-0257-00	PAFZZN
R70	RESISTOR, Fixed, film, 1.33k ohms, 1%, 1/8 w	16299	NA551.33K1%	4703-0205-00	PAFZZN
R71	Same as R7				
R72	RESISTOR, Fixed, film, 6.34k ohms, 1%, 1/8 w	16299	NA556.34K1%	4703-0270-00	PAFZZN
R73 thru R75	Same as R7				
R76	LIGHT EMITTING DIODE	03911	CLM8000	3700-0007-00	PAFZZN
R77	Same as R28				
R78	Same as R28				
R79	Same as R30				
RP1	RESISTOR NETWORK	73138	784-1-R10K	4710-0018-50	PAFZZN
TP1	JACK, Tip, violet	74970	105-0762-001	2100-0009-00	PAFZZN
TP2	JACK, Tip, yellow	74970	105-0757-001	2100-0006-00	PAFZZN
VR1	SEMICONDUCTOR DEVICE, Diode	81349	1N751A	4802-0751-00	PAFZZN
XIC1 thru XIC5	SOCKET, Plug-in electronic components, 8 contacts	91506	208-AG39D	2101-0000-00	PAFZZN
XIC6	Not used				
XIC7	Same as XIC1				
XIC8	Not used				
XIC9 thru XIC11	Same as XIC1				
XIC12	SOCKET, Plug-in electronic components, 16 contacts	91506	216-AG39D	2101-0000-02	PAFZZN
XIC13	Same as XIC12				
XIC14	Same as XIC1				
XIC15	Same as XIC12				
XIC16	SOCKET, Plug-in electronic components, 24 contacts	91506	224-AG39D	2101-0000-06	PAFZZN
XIC17	Same as XIC12				
XIC18	Same as XIC12				
XIC19	Same as XIC1				
XIC20	Same as XIC1				
XIC21 thru XIC23	SOCKET, Plug-in electronic components, 14 contacts	91506	214-AG39D	2101-0000-01	PAFZZN
Y1	CRYSTAL UNIT, Quartz, 1.024 MHz, 0.005%	51701		2300-0006-00	PAFZZN
1	STRAP, Tiedown, electrical components	06383	SST1M	6002-0120-00	

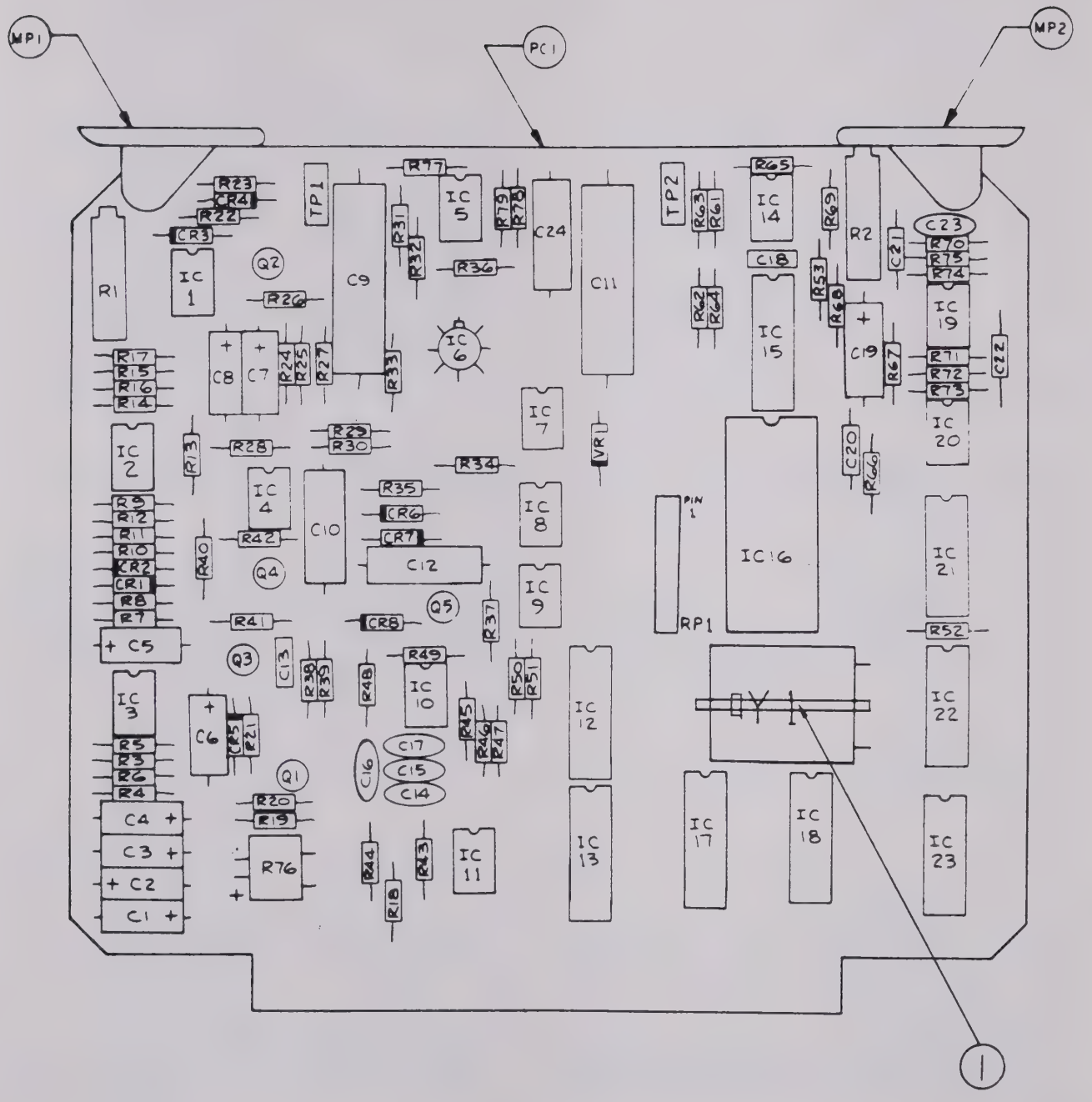

Figure 6-26. P/AR Generator and Receiver Circuit Card Assembly 1A15 (Used on Model 520B2-17)

Fig. & ref no.	Description	Mfr code	Mfr part no.	Halcyon part no.	SMR code
Fig. 6-27	MODEL 500B MAINFRAME (See fig. 6-1, ref no. 2, for nha)	51701		9000-1020-00	XBFFF
A1	REAR PANEL ASSY (See fig. 6-28 for breakdown)	51701		8200-1027-00	AFFFZ
A2	ENCLOSURE ASSY (See fig. 6-32 for breakdown)	51701		8500-0001-12	AFFFZ
A3	CRT POWER SUPPLY CIRCUIT CARD ASSY (See fig. 6-33 for breakdown)	51701		8000-0034-00	PAFFFP
A4	CRT DEFLECTION CIRCUIT CARD ASSY (See fig. 6-34 for breakdown)	51701		8000-1011-00	PAFDDT
A5	RANDOM ACCESS MEMORY CIRCUIT CARD ASSY (See fig. 6-35 for breakdown)	51701		8000-1098-00	PAFFFP
DS1 thru DS4	LAMP, Glow, 0.026 amp	76854	100057018	2400-0102-18	PAFZZN
MP1	CONNECTOR BODY, Plug, electrical, 2 contacts	27264	09-50-3021	2101-0017-02	PAFZZN
MP2	RAIL, Right side	51701		2500-0500-03	XBFZZ
MP3	RAIL, Left enclosure	51701		2500-1025-00	XBFZZ
MP4	BRACKET, PCB mounting	51701		2500-0500-11	XBFZZ
MP5	GRATICULE, CRT	51701		2500-1014-00	XBFZZ
MP6	BEZEL, CRT	51701		2500-1015-00	XBFZZ
MP7	SHIELD, CRT	51701		2500-1013-00	XBFZZ
MP8 thru MP13	HOLDER, Electrical card	23880	1450F	1401-0002-00	XBFZZ
MP14 thru MP19	HOLDER, Electrical card	23880	1650F	1401-0003-00	XBFZZ
MP20	KNOB	49956	70-2WD-2G	2401-0054-06	PAFZZN
MP21	Same as MP20				
MP22 thru MP24	KNOB	49956	50-2-1G	2401-0054-01	PAFZZN
MP25	COLOR ENHANCER, Graticule	51701		2500-1047-00	XBFZZ
MP26	PANEL, Front	51701		2500-1024-01	XBFZZ
MP27	CONTACT, Electrical	27264	08-50-0106	2101-0017-30	PAFZZN
MP28	Same as MP27				
MP29	COVER, Dust	51701		2500-0001-18	XBFZZ
T1	TRANSFORMER, Power, step-down	51701		5600-0003-01	PAFZZN
V1	TUBE, Cathode ray	73445	D14-251GM	5700-0002-01	PAFZZN
1	TAPE, Teflon, pressure sensitive adhesive, (Four pieces, each 1/2 in. wide by 1 in. lg) (Manufactured by CHR Industries, Inc., 407 East St., New Haven, Connecticut 06509)	NONE	POLYCOHR 630		
2	TAPE, Foam rubber, pressure sensitive adhesive, 3/4 in. wide by 1/4 in. thk, length as required	53800	74623.	6002-0095-00	
3	SCREW, Machine, no. 6-32, 1/4 in. lg, pan hd, slot dr, steel, cd pl	96906	MS35223-26	2800-0143-00	XBFZZ
4	WASHER, Lock, split-ring, no. 6, steel, cd pl	96906	MS35338-41	2800-0043-00	XBFZZ
5	NUT, Plain, assembled washer, no. 6-32, steel, cd pl	78189	510-061810-01	2800-0023-00	XBFZZ
6	SCREW, Machine, no. 4-40, 7/16 in. lg, pan hd, slot dr, steel, cd pl	96906	MS35223-16	2800-0126-00	XBFZZ
7	NUT, Plain, hexagon, no. 4-40, steel, cd pl	96906	MS35649-242	2800-0012-00	XBFZZ
8	WASHER, Lock, internal-tooth, no. 4, cres	96906	MS35333-70	2800-0072-00	XBFZZ
9	SCREW, Machine, no. 6-32, 5/16 in. lg, fillister hd, slot dr, steel, cd pl	COML		2801-0005-04	XBFZZ
10	SCREW, Machine, no. 6-32, 1/2 in. lg, pan hd, slot dr, cd pl	96906	MS35223-30	2800-0147-00	XBFZZ

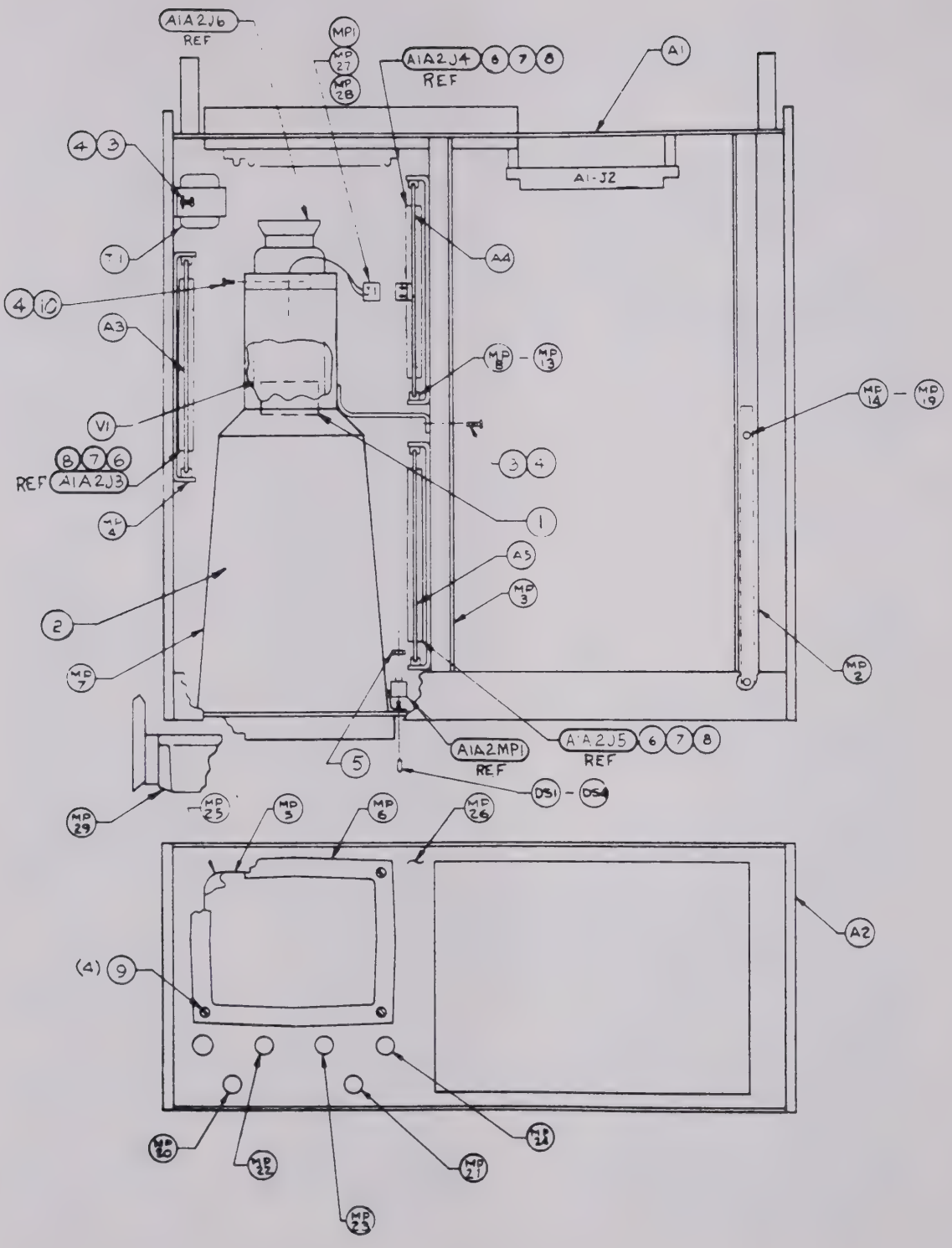

Figure 6-27. Model 500B Mainframe

Fig. & ref no.	Description	Mfr code	Mfr part no.	Halcyon part no.	SMR code
Fig. 6-28	REAR PANEL ASSY (See fig. 6-27, ref no. A1, for nha)	51701		8200-1027-00	AFFFZ
A1	POWER SUPPLY ASSY (See fig. 6-29 for breakdown)	51701		8800-0091-00	PAFFFP
A2	WIRING HARNESS (See fig. 6-31 for breakdown)	51701		6010-1030-00	AFFFZ
F1	FUSE, Cartridge, 1 amp, 250 v	75915	A13AG1	5101-0037-00	PAFZZN
FL1	FILTER, AC line, 115/230 vac	77342	5004-6607	2700-0001-00	PAFZZN
J1	POST, Binding, electrical, red	83330	1517-102	2100-0025-00	PAFZZN
J2	POST, Binding, electrical, black	83330	1517-103	2100-0023-00	PAFZZN
J3	Same as J1				
J4	Same as J2				
MP1	PANEL, Rear chassis	51701		2500-1023-00	AFFFZ
MP2	HANDLE	98376	B25778D24-2	1400-0002-01	XBFZZ
MP3	Same as MP2				
MP4	BRACKET, Heat sink	51701		2500-1010-01	XBFZZ
MP5	Same as MP4				
MP6	THUMBSCREW, 5/16-24	51701		2500-0033-02	XBFZZ
MP7	RING, Retaining	79136	5555-31	2801-0003-00	PAFZZN
MP8	SPACER, Sleeve	83330	8505	2800-6158-00	PAFZZN
MP9	Same as MP8				
MP10 thru MP12	JUMPER, Terminal board	71785	140J-1	2100-0054-00	PAFZZN
MP13	WASHER, Spring tension, 0.328 in. ID, 0.682 in. OD, 0.010 thk, beryllium copper	86928	5806-19-1	2801-0001-00	XBFZZ
MP14	WASHER, Flat, 0.331 in. ID, 0.513 in. OD, 0.016 in. thk, cres	86928	5702-124-16	2801-0002-00	PAFZZN
MP15	GUARD, Heat sink	51701		2500-1068-02	XBFZZ
TB1	TERMINAL BOARD	71785	10-164	2100-0040-00	XBFZZ
XF1	FUSEHOLDER	75915	342014AL	5101-0101-00	PAFZZN
1	Not used				
2	SCREW, Machine, no. 4-40, 1-3/8 in. lg, pan hd, slot dr, steel, cd pl	96906	MS35223-23	2800-0133-00	XBFZZ
3	SCREW, Machine, no. 6-32, 7/16 in. lg, pan hd, slot dr, steel, cd pl	96906	MS35223-29	2800-0146-00	XBFZZ
4	SCREW, Tapping, thread forming, no. 8-18, 3/8 in. lg, 82 deg flat hd, cross-recessed dr, steel, cd pl	96906	MS24615-24	2800-0221-02	XBFZZ
5	SCREW, Machine, no. 8-32, 5/16 in. lg, pan hd, slot dr, steel, cd pl	96906	MS35223-42	2800-0164-00	XBFZZ
6	NUT, Plain, hexagon, no. 4-40, steel, cd pl	96906	MS35649-242	2800-0012-00	XBFZZ
7	SCREW, Machine, no. 4-40, 5/16 in. lg, pan hd, slot dr, steel, cd pl	96906	MS35223-14	2800-0124-00	XBFZZ
8	NUT, Plain, assembled washer, no. 6-32, steel, cd pl	78189	510-061810-01	2800-0023-00	XBFZZ
9	WASHER, Lock, split-ring, no. 6, steel, cd pl	96906	MS35338-41	2800-0043-00	XBFZZ
10	SCREW, Machine, no. 6-32, 3/8 in. lg, pan hd, slot dr, steel, cd pl	96906	MS35223-28	2800-0145-00	XBFZZ
11	WASHER, Flat, 0.125 in. ID, 0.250 in. OD, 0.022 in. thk, steel cd pl	96906	MS27183-3	2800-0032-00	XBFZZ
12	WASHER, Lock, internal-tooth, no. 4, cres	96906	MS35333-70	2800-0072-00	XBFZZ

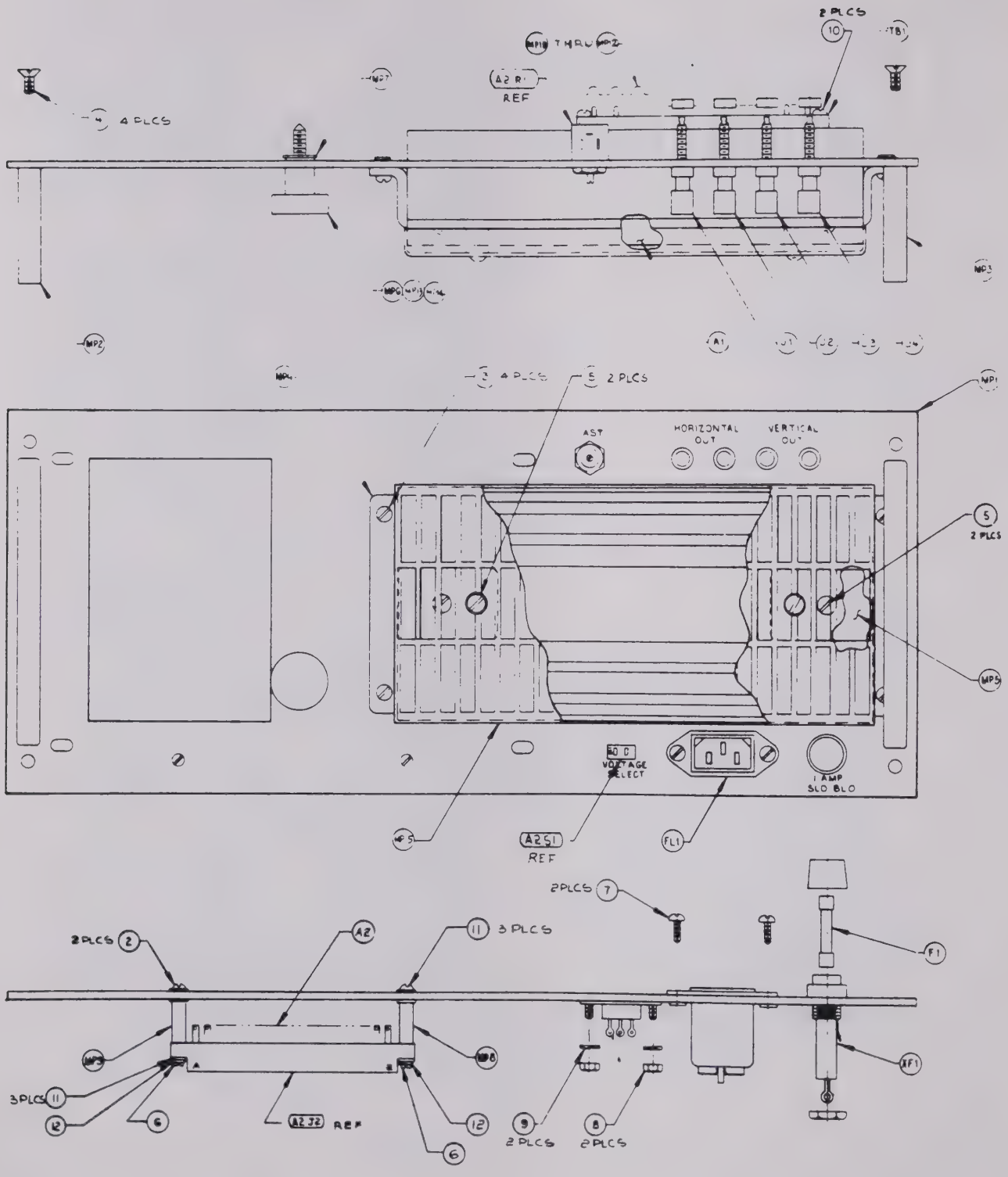

Figure 6-28. Rear Panel Assembly 2A1

Fig. & ref no.	Description	Mfr code	Mfr part no.	Halcyon part no.	SMR code
Fig. 6-29	POWER SUPPLY ASSY (See fig. 6-28, ref no. A1, for nha)	51701		8800-0091-00	PAFFFP
A1	POWER SUPPLY CIRCUIT CARD ASSY (See fig. 6-30 for breakdown)	51701		8000-0091-06	PAFFFP
IC1	INTEGRATED CIRCUIT	04713	MC7805CP	3131-0101-00	PAFZZN
IC2	Same as IC1				
J1	TERMINAL BOARD	71785	10-160B-L	2100-0069-00	
MP1	COVER	51701		2500-0091-01	
MP2	BRACKET, Mounting plate	51701		2500-0091-02	
MP3	BRACKET, Cover mounting	51701		2500-0091-03	XBFZZ
MP4	Same as MP3				
MP5	HEAT SINK, Power supply	51701		2500-0091-04	XBFZZ
MP6	PLATE	51701		2500-0091-05	
MP7	SPACER, Sleeve	83330	8480	2800-7101-00	
MP8	Same as MP7				
MP9	SPACER, Sleeve	83330	8501	2800-7122-00	
MP10 thru MP13	SPACER, Sleeve	83330	8521	2800-7142-00	
MP14	Not used				
MP15 thru MP17	INSULATOR, Plate	55285	7403-09FR-54	2800-8098-01	
Q1 thru Q3	Not used				
Q4	TRANSISTOR	01295	TIP32	4801-0032-00	PAFZZN
T1	TRANSFORMER, Power, step-down	51701		5600-0010-00	PAFZZN
1	WASHER, Flat, 0.125 in. ID, 0.250 in. OD, 0.022 in. thk, steel, cd pl	96906	MS27183-3	2800-0032-00	XBFZZ
2	WASHER, Lock, split-ring, no. 4, steel, cd pl	96906	MS35338-40	2800-0042-00	XBFZZ
3	SCREW, Machine, no. 4-40, 1/4 in. lg, pan hd, slot dr, steel, cd sl	96906	MS35223-13	2800-0123-00	XBFZZ
4	SCREW, Machine, no. 4-40, 7/16 in. lg, pan hd, slot dr, steel, cd pl	96906	MS35223-16	2800-0126-00	XBFZZ
5	SCREW, Machine, no. 4-40, 5/8 in. lg, pan hd, slot dr, steel, cd pl	96906	MS35223-18	2800-0129-00	XBFZZ
6	SCREW, Machine, no. 8-32, 1-1/2 in. lg, pan hd, slot dr, steel, cd pl	96906	MS35223-51	2800-0174-00	XBFZZ
7	INSULATOR, Washer, 0.115 in. ID, 0.250 in. OD, 0.063 in. thk, fibre	83330	2161	2800-1022-00	XBFZZ
8	INSULATOR, Washer, 0.169 in. ID, 0.375 in. OD, 0.063 in. thk, fibre	83330	2163	2800-1025-00	XBFZZ
9 thru 11	Not used				
12	TERMINAL, Lug	83330	1412-4	2802-0009-00	
13	GROMMET, Rubber	83330	91120	2802-0111-00	
14	WASHER, Lock, split-ring, no. 8, steel, cd pl	96906	MS35338-42	2800-0044-00	XBFZZ
15	INSULATOR, Plate	55285	7403-09FR-54	2800-8098-01	XBFZZ

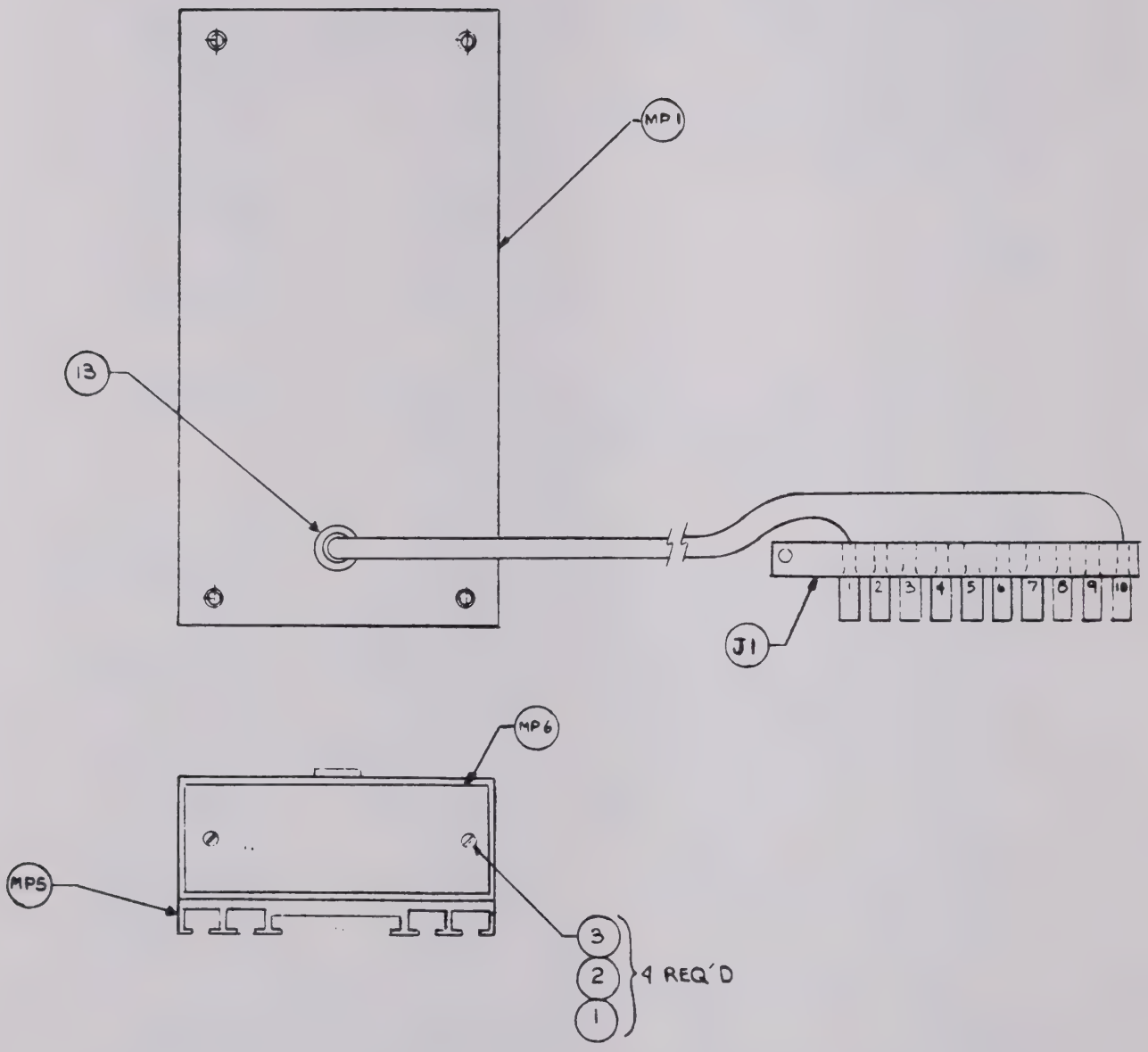

Figure 6-29. Power Supply Assembly 2A1A1 (Sheet 1 of 2)

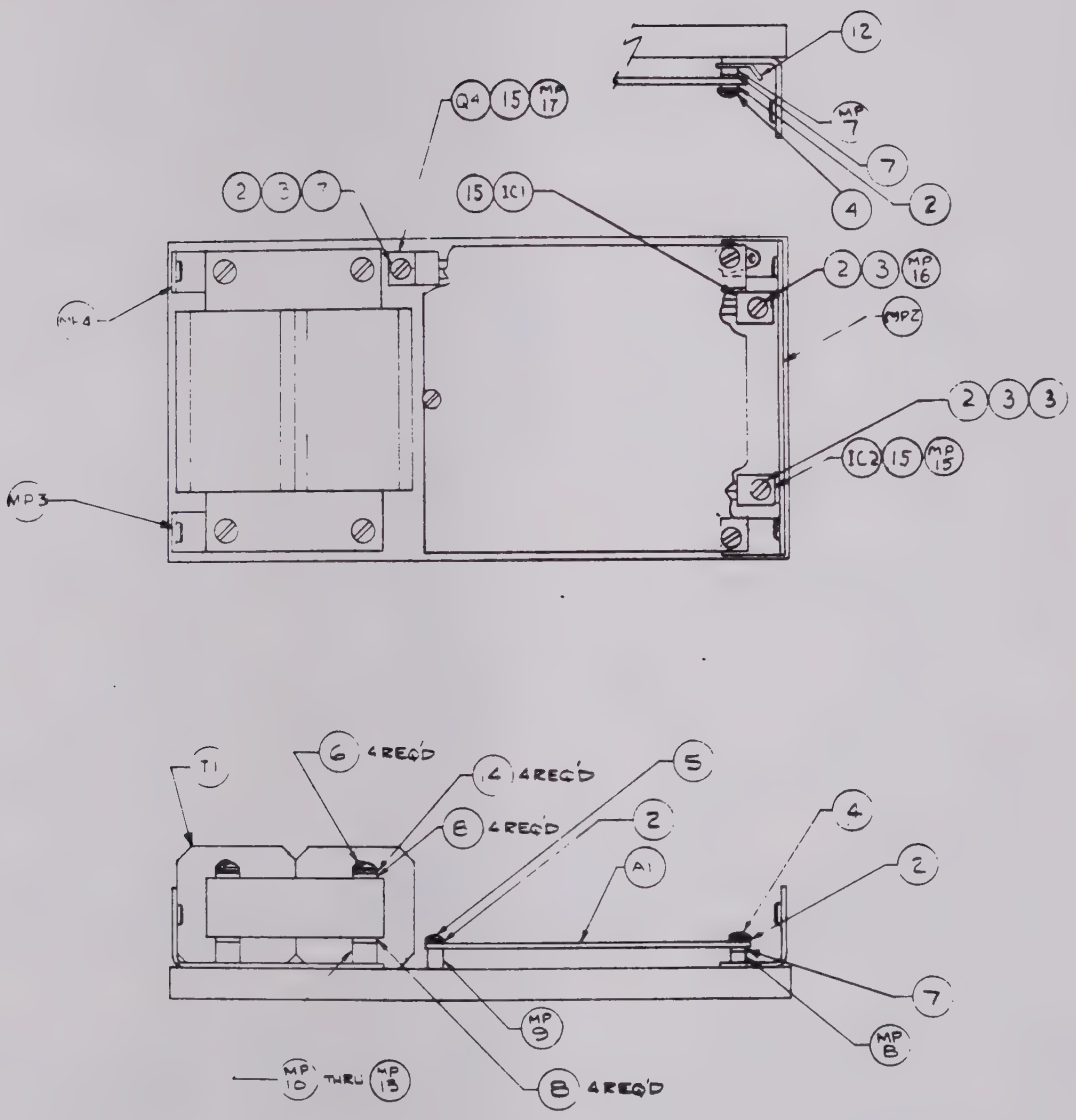

Figure 6-29. Power Supply Assembly 2A1A1 (Sheet 2 of 2)

Fig. & ref no.	Description	Mfr code	Mfr part no.	Halcyon part no.	SMR code
Fig. 6-30	POWER SUPPLY CIRCUIT CARD ASSY (See fig. 6-29, ref no. A1, for nha)	51701		8000-0091-06	PAFFP
C1	CAPACITOR, Fixed electrolytic, 1000 uF, -10 +75%, 25 vdcw	56289	39D108G025GL4	1504-0250-00	PAFZZN
C2	CAPACITOR, Fixed, ceramic, 0.1 uF, 10%, 100 vdcw	81349	CK06BX104K	1501-0074-00	PAFZZN
C3	CAPACITOR, Fixed, electrolytic, 47 uF, 10%, 20 vdcw	56289	150D476X9020R2	1503-0189-00	PAFZZN
C4	CAPACITOR, Fixed, electrolytic, 2200 uF, -10 +75%, 25 vdcw	56289	39D228G025HP4	1504-0255-00	PAFZZN
C5	Same as C2				
C6	Same as C3				
C7	CAPACITOR, Fixed, electrolytic, 4000 uF, -10 +75%, 15 vdcw	56289	39D408G015JL4	1504-0233-00	PAFZZN
C8	Same as C3				
C9	CAPACITOR, Fixed, electrolytic, 10 uF, -10 +50%, 35 vdcw (Manufactured by Elna America, Inc., 153 E. Savarona Way, Carson City, California 90746)	NONE	35TL10UF	1504-0052-00	PAFZZN
CR1 thru CR4	Not used				
CR5	SEMICONDUCTOR DEVICE, Diode	81349	1N4148	4802-4148-00	PAFZZN
CR6	Not used				
CR7	Same as CR5				
DQ1 thru DQ3	RECTIFIER, Bridge	83003	VH148	4803-0006-02	PAFZZN
F1 thru F21	TERMINAL, Stud	88245	2010-B	2103-0004-00	
IC3	INTEGRATED CIRCUIT	27014	LM309H	3131-0100-00	PAFZZN
PC1	PRINTED WIRING BOARD	51701		1700-0091-06	XAFZZ
Q1	TRANSISTOR	27014	2N3906	4800-3906-00	PAFZZN
Q2	Same as Q1				
Q3	TRANSISTOR	27014	2N4354	4800-4354-00	PAFZZN
R1	RESISTOR, Fixed, film, 499 ohms, 1%, 1/8 w	16299	NA55499R1%	4703-0164-00	PAFZZN
R2	RESISTOR, Variable, 200 ohms, 10%	71450	190PC201A	4750-0025-00	PAFZZN
R3	RESISTOR, Fixed, film, 909 ohms, 1%, 1/8 w	16299	NA55909R1%	4703-0189-00	PAFZZN
R4	Same as R1				
R5	Same as R2				
R6	Same as R3				
R7	RESISTOR, Fixed, composition, 56 ohms, 5%, 1/4 w	81349	RC07GF560J	4700-0367-00	PAFZZN
R8	RESISTOR, Fixed, wire wound, 0.22 ohm, 5%, 2 w	75042	BWH-0.22-5%	4707-1505-08	PAFZZN
R9	RESISTOR, Fixed, composition, 1k ohms, 5%, 1/4 w	81349	RC07GF102J	4700-0397-00	PAFZZN
R10	RESISTOR, Fixed, composition, 100 ohms, 5%, 1/4 w	81349	RC07GF101J	4700-0373-00	PAFZZN
SCR1	SEMICONDUCTOR DEVICE, Controlled rectifier	81483	IR106A1	4801-0021-00	PAFZZN
VR1 thru VR5	Not used				
VR6	SEMICONDUCTOR DEVICE, Diode	81349	1N753A	4802-0753-00	PAFZZN
1	STRAP, Tiedown, electrical components	06383	SST1M	6002-0120-00	

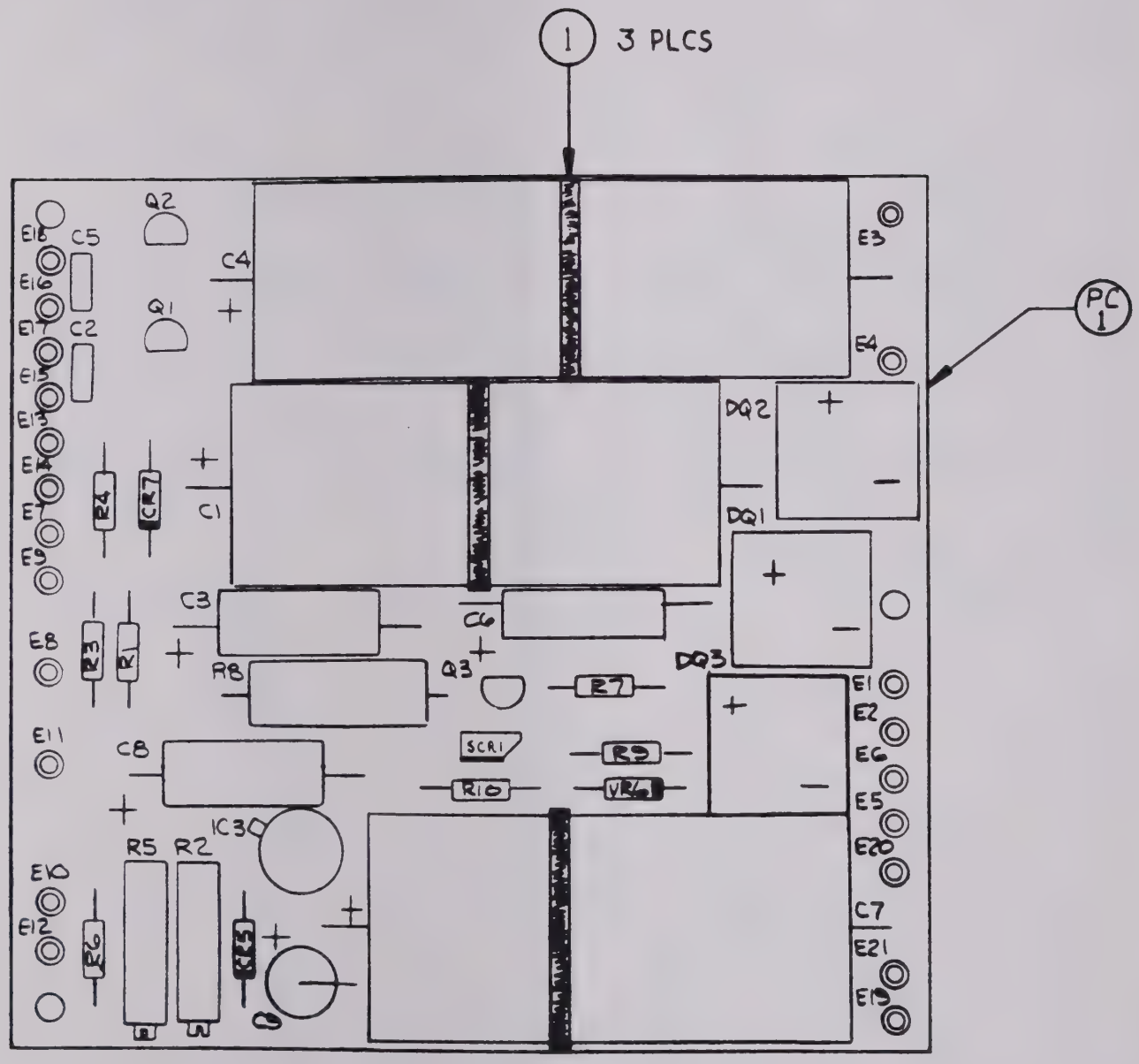

Figure 6-30. Power Supply Circuit Card Assembly 2A1A1A1

Fig. & ref no.	Description	Mfr code	Mfr part no.	Halcyon part no.	SMR code
Fig 6-31	WIRING HARNESS (See fig. 6-28, ref no. A2, for nha)	51701		6010-1030-00	AFFFZ
C1	CAPACITOR, Fixed, electrolytic, 100 ufd, -0 +100%, 50 vdcw	24318	TAD1001L50H	1504-0073-00	PAFZZN
FS1	FANNING STRIP	71785	10-160B-L	2100-0069-00	
J1	Not used				
J2 thru J5	CONNECTOR, Receptacle, electrical, 44 contacts	02660	225-22221-101	2100-0115-00	PAFZZN
J6	SOCKET, Plug-in electronic components, 14 contacts	73445	55566	2101-0025-00	PAFZZN
MP1	LENS, Light dispersion	51701		2500-1045-00	PAFZZN
MP2	TERMINAL, Lug	98410	A-538-06	2100-0506-00	
MP3	Same as MP2				
R1	RESISTOR, Variable, 250k ohms, 10%, 2 w	01121	70B1N040L254W	4751-0016-00	PAFZZN
R2	RESISTOR, Variable, 500 ohms, 20%, 1/2 w	01121	WA2G056501A	4751-0046-01	PAFZZN
R3	RESISTOR, Variable, 250k ohms, 10%, 3/8 w	71450	6P1046-7147HV300	4751-0501-00	PAFZZN
R4	RESISTOR, Variable, 1 megohm, 10%, 3/8 w	71450	6P1047-7147HV300	4751-0504-00	PAFZZN
R5	RESISTOR, Fixed, composition, 10k ohms, 5%, 1/4 w	81349	RC07GF103J	4700-0421-00	PAFZZN
R6	RESISTOR, Fixed, composition, 20k ohms, 5%, 1/4 w	81349	RC07GF203J	4700-0428-00	PAFZZN
R7	RESISTOR, Fixed, composition, 39k ohms, 5%, 1/4 w	81349	RC07GF393J	4700-0435-00	PAFZZN
S1	SWITCH, Slide, dpdt, 3 amps ac, 0.5 amp dc, 125 v	82389	46256LFR	5100-0033-00	PAFZZN
S2	Not used				
S3	SWITCH, Rotary, 1 pole, 3 positions	71590	SA-201-4A	5100-0304-01	PAFZZN
S4	SWITCH, Rotary, 4 pole, 6 positions	71590	SA-211-4A	5100-0304-02	PAFZZN
XDS1 thru XDS4	LAMPHOLDER	76854	99-33080	2400-0150-00	PAFZZN
1	STRAP, Tiedown, electrical components	06383	SST1M	6002-0120-00	
2	TERMINAL, Lug	26132	SF2562S	2802-0051-00	XBFZZ

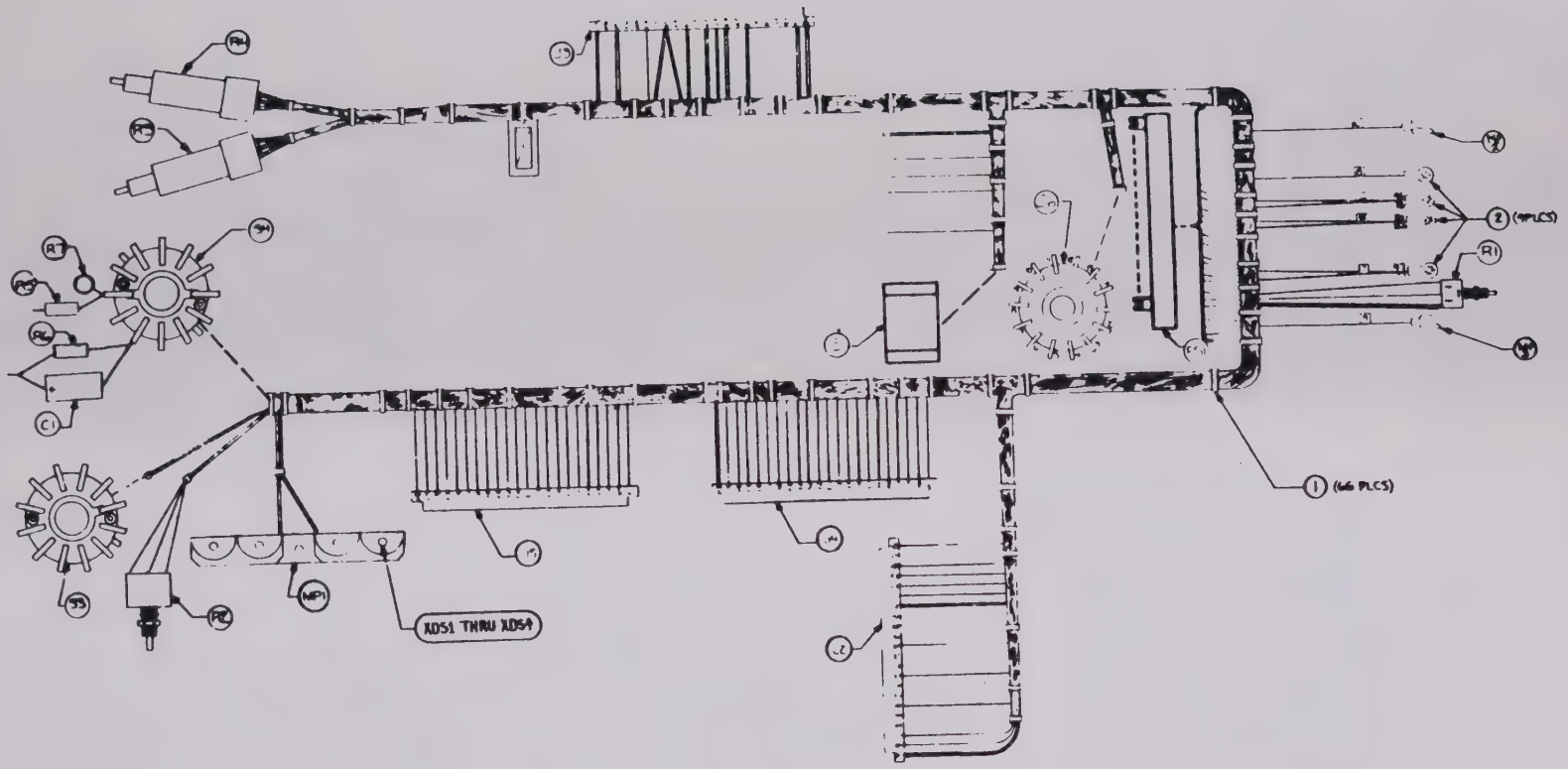

Figure 6-31. Wiring Harness 2A1A2

Fig. & ref no.	Description	Mfr code	Mfr part no.	Halcyon part no.	SMR code
Fig. 6-32	ENCLOSURE ASSY (See fig. 6-27, ref no. A2, for nha)	51701		8500-0001-12	AFFFZ
MP1	PLATE ASSY, Right side	98376	B43222-2	1400-0001-09	
MP2	PLATE ASSY, Left side	98376	B43222-1	1400-0001-10	
MP3	EXTRUSION, Transverse	98376	B30728B2-1	1400-0001-03	
MP4	Same as MP3				
MP5	COVER, Top (Supplied with attaching hardware)	98376	B30728C3	1400-0001-04	
MP6	COVER, Bottom (Supplied with attaching hardware)	98376	B30728C4	1400-0001-05	
MP7	STAND, Tilt (Supplied with attaching hardware)	98376	B30728B5-1	1400-0001-06	
MP8	EXTRUSION, Rack mounting	51701		2500-0001-14	
MP9	Same as MP8				
MP10	KEEPER, Dust cover latch	51701		1400-0101-02	
MP11	Same as MP10				
1	RIVET, Blind, 1/8 in. dia, 21/64 in. lg, 100 deg flat hd, aluminum alloy	61957	AB43BS	2800-5105-02	
2	SCREW, Tapping, thread forming, no. 8-18, 7/8 in. lg, pan hd, cross-recessed dr, cres, passivated	96906	MS24622-33	2800-0219-05	

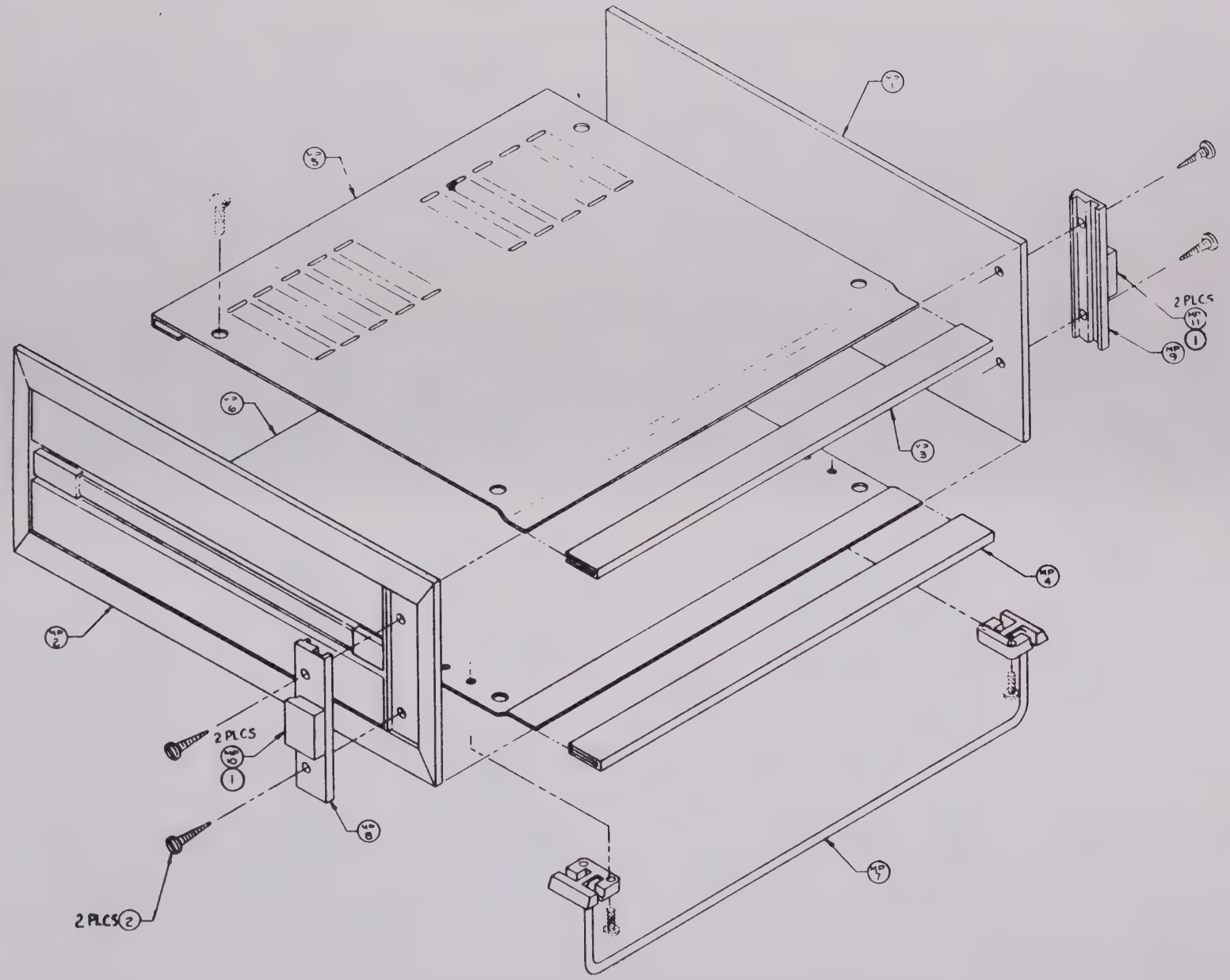

Figure 6-32. Enclosure Assembly 2A2

Fig. & ref no.	Description	Mfr code	Mfr part no.	Halcyon part no.	SMR code
Fig. 6-33	CRT POWER SUPPLY CIRCUIT CARD ASSY (See fig. 6-27, ref no. A3, for nha)	51701		8000-0034-00	PAFFFP
C1	CAPACITOR, Fixed, electrolytic, 100 uF, -0 +100%, 25 vdcw	24138	TAD100TJ25A	1504-0044-00	PAFZZN
C2	CAPACITOR, Fixed, ceramic, 0.1 uF, 10%, 100 vdcw	81349	CK06BX104K	1501-0074-00	PAFZZN
C3	CAPACITOR, Fixed, mica, 560 pF, 5%, 500 vdcw	00853	D155C561JP	1500-0150-00	PAFZZN
C4	Same as C3				
C5	Same as C1				
C6	Same as C2				
C7	CAPACITOR, Fixed, ceramic, 0.1 uF, 20%, 500 vdcw	56289	5GA-P10	1501-0581-00	PAFZZN
C8	CAPACITOR, Fixed, plastic, 0.02 uF, 10%, 1600 vdcw	56289	16PS-S20	1505-0001-00	PAFZZN
C9	CAPACITOR, Fixed, ceramic, 0.005 uF, 20%, 3000 vdcw	71590	DD30-502	1501-0658-00	PAFZZN
C10	Same as C9				
C11	CAPACITOR, Fixed, electrolytic, 4.7 uF, -10 +75%, 350 vdcw (Manufactured by Elna America, Inc., 153 E. Savarona Way, Carson City, California 90746)	NONE	350TH4.7UI	1504-0129-01	PAFZZN
C12	Same as C9				
C13	CAPACITOR, Fixed, ceramic, 0.01 uF, 10%, 200 vdcw	81349	CK06BX103K	1501-0062-00	PAFZZN
C14	CAPACITOR, Fixed, plastic, 0.1 uF, 10%, 400 vdcw	56289	160P10494	1505-0002-00	PAFZZN
C15	Same as C9				
C16	Same as C9				
CR1	SEMICONDUCTOR DEVICE, Diode	01295	1N456A	4802-0456-00	PAFZZN
CR2 thru CR5	SEMICONDUCTOR DEVICE, Diode	03508	GEA114C	4803-0001-00	PAFZZN
CR6 thru CR8	SEMICONDUCTOR DEVICE, Diode	14099	1N4257	4802-4257-00	PAFZZN
CR9	Same as CR2				
CR10	SEMICONDUCTOR DEVICE, Diode	81349	1N753A	4802-0753-00	PAFZZN
L1	COIL, Radio frequency, 10 uH, 10%	71895	1025-44	1800-0025-00	PAFZZN
L2	Same as L1				
L3	COIL, Radio frequency, 1000 uH, 5%	99800	2500-28	1800-0126-00	PAFZZN
MP1	EXTRACTOR, Electrical card	18677	S-203	1401-0011-00	PAFZZN
MP2	Same as MP1				
PC1	PRINTED WIRING BOARD	51701		1700-0034-00	XAFZZ
Q1	TRANSISTOR	04713	2N4237	4800-4237-00	PAFZZN
Q2	Same as Q1				
R1	RESISTOR, Fixed, composition, 2.2k ohms, 5%, 1/4 w	81349	RC07GF222J	4700-0405-00	PAFZZN
R2	RESISTOR, Fixed, composition, 220 ohms, 5%, 1/4 w	81349	RC07GF221J	4700-0381-00	PAFZZN
R3	Same as R2				
R4	RESISTOR, Fixed, composition, 270k ohms, 5%, 1/4w	81349	RC07GF274J	4700-0455-00	PAFZZN
R5 thru R7	RESISTOR, Fixed, composition, 47k ohms, 5%, 1/4 w	81349	RC07GF473J	4700-0437-00	PAFZZN
R8	RESISTOR, Fixed, composition, 390k ohms, 5%, 1/4 w	81349	RC07GF394J	4700-0459-00	PAFZZN
R9	RESISTOR, Fixed, composition, 1 megohm, 5% 1/2 w	81349	RC20GF105J	4700-0769-00	PAFZZN
R10	RESISTOR, Fixed, composition, 330k ohms, 5%, 1/4 w	81349	RC07GF334J	4700-0457-00	PAFZZN
R11	Same as R9				
R12	RESISTOR, Fixed, composition, 100k ohms, 5%, 1/4 w	81349	RC07GF104J	4700-0445-00	PAFZZN
T1	TRANSFORMER, Inverter	15253	1255301	5600-0002-00	PAFZZN

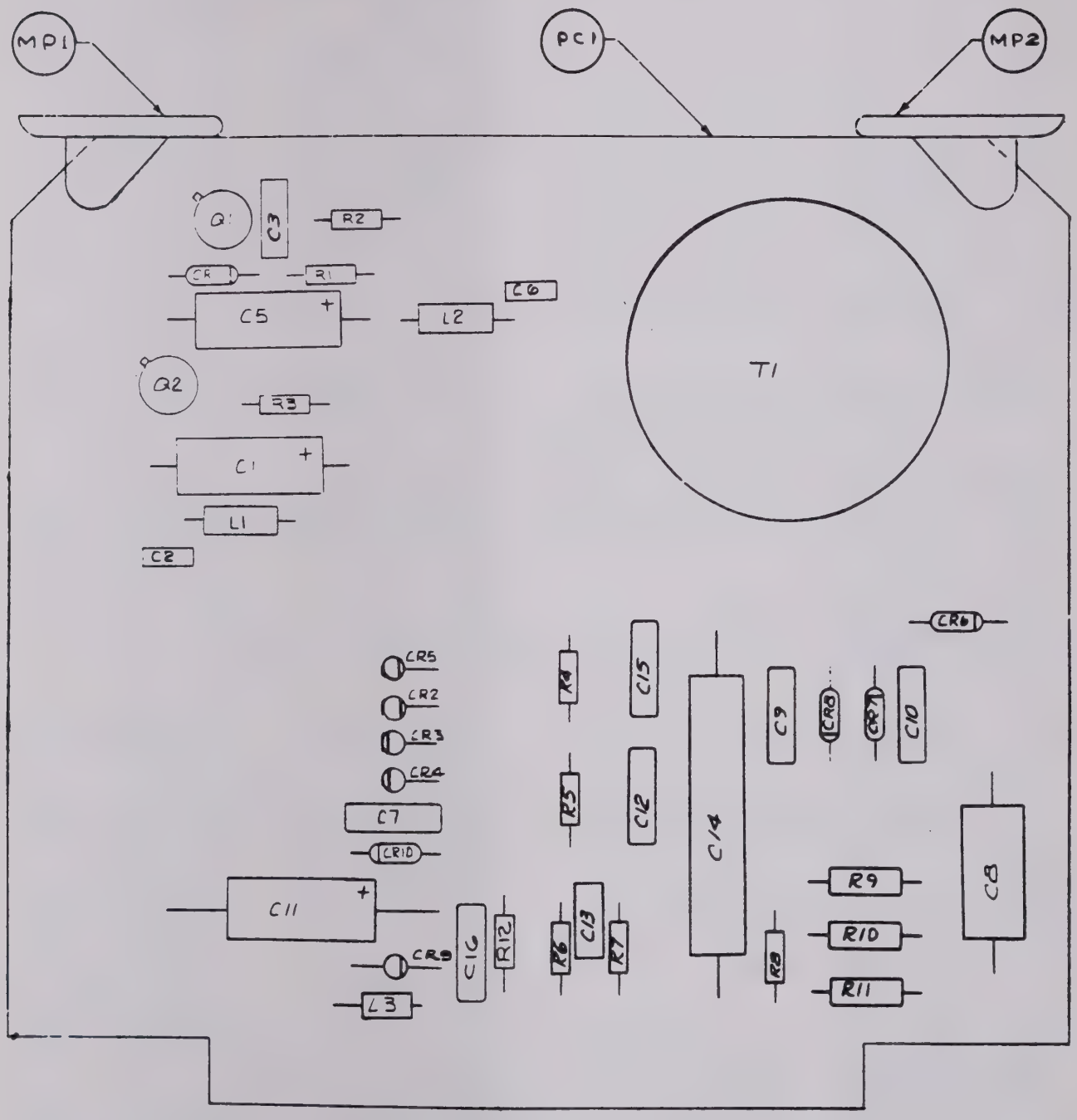

Figure 6-33. CRT Power Supply Circuit Card Assembly 2A3

Fig. & ref no.	Description	Mfr code	Mfr part no.	Halcyon part no.	SMR code
Fig. 6-34	CRT DEFLECTION CIRCUIT CARD ASSY (See fig. 6-27, ref no. A4, for nha)	51701		8000-1011-00	PAFDDT
C1 thru C3	CAPACITOR, Fixed, electrolytic, 10 uF, -10 +50%, 35 vdcw (Manufactured by Elna America, Inc., 153 E. Savarona Way, Carson City, California 90746)	NONE	35TL10UF	1504-0052-00	PAFZZN
C4	CAPACITOR, Fixed, mica, 100 pF, 5%, 500 vdcw	00853	D155C101JP	1500-0077-00	PAFZZN
C5	Same as C4				
C6	CAPACITOR, Fixed, mica, 56 pF, 5%, 500 vdcw	00853	D155C560JP	1500-0071-00	PAFZZN
C7	CAPACITOR, Fixed, ceramic, 0.1 uF, 20%, 500 vdcw	56289	5GA-P10	1501-0581-00	PAFZZN
C8	Same as C7				
C9	CAPACITOR, Fixed, mica, 270 pF, 5%, 500 vdcw	00853	D155C271JP	1500-0141-00	PAFZZN
C10	Same as C6				
C11	Same as C7				
C12	Same as C6				
C13 thru C15	CAPACITOR, Fixed, ceramic, 0.1 uF, 10%, 100 vdcw	81349	CK06BX104K	1501-0074-00	PAFZZN
C16	CAPACITOR, Fixed, electrolytic, 4.7 uF, -10 +75%, 350 vdcw (Manufactured by Elna America, Inc., 153 E. Savarona Way, Carson City, California 90746)	NONE	350TH4.7UF	1504-0129-01	PAFZZN
C17	Same as C16				
C18	CAPACITOR, Fixed, ceramic, 0.01 uF, 10%, 200 vdcw	81349	CK06BX103K	1501-0062-00	PAFZZN
C19	CAPACITOR, Fixed, mica, 27 pF, 5%, 500 vdcw	00853	D155C270JP	1500-0062-00	PAFZZN
C20	Same as C19				
C21	Same as C18				
C22	Same as C18				
C23	Same as C6				
C24	Same as C19				
C25	Same as C19				
C26	Same as C13				
C27	Not used				
C28	CAPACITOR, Fixed, mica, 1200 pF, 5%, 300 vdcw	00853	D153C122JP	1500-0199-00	PAFZZN
CR1 thru CR8	SEMICONDUCTOR DEVICE, Diode	81349	1N4148	4802-4148-00	PAFZZN
J1	CONNECTOR, Receptacle, electrical, 2 contacts	27264	09-65-1021	2101-0014-02	PAFZZN
L1 thru L6	COIL, Radio frequency, 1000 uH, 5%	99800	2500-28	1800-0126-00	PAFZZN
MP1	EXTRACTOR, Electrical card	18677	S-203	1401-0011-00	PAFZZN
MP2	Same as MP1				
PC1	PRINTED WIRING BOARD	51701		1700-1011-00	XAFZZ
Q1	TRANSISTOR	07263	2N5833	4800-5833-00	PAFZZN
Q2	Same as Q1				
Q3	TRANSISTOR	27014	2N3568	4800-3568-00	PAFZZN
Q4	Same as Q1				
Q5	Same as Q1				
Q6	Same as Q3				
Q7	TRANSISTOR	27014	2N3906	4800-3906-00	PAFZZN
Q8	Same as Q1				
R1	RESISTOR, Variable, 5k ohms, 20%	73138	72XWR5K	4750-0009-00	PAFZZN
R2	Same as R1				
R3	RESISTOR, Variable, 2k ohms, 20%	73138	72XWR2K	4750-0008-00	PAFZZN

Fig. & ref no.	Description	Mfr code	Mfr part no.	Halcyon part no.	SMR code
Fig. 6-34	(Continued)				
R4	Same as R1				
R5	Same as R1				
R6	RESISTOR, Variable, 1k ohms, 20%	73138	72XWR1K	4750-0007-00	PAFZZN
R7	Same as R6				
R8	RESISTOR, Fixed, film, 200k ohms, 1%, 1/8 w	16299	NA55200K1%	4703-0414-00	PAFZZN
R9	Same as R8				
R10	RESISTOR, Fixed, film, 4.99k ohms, 1%, 1/8 w	16299	NA554.99K1%	4703-0260-00	PAFZZN
R11	RESISTOR, Fixed, film, 1k ohms, 1%, 1/8 w	16299	NA551K1%	4703-0193-00	PAFZZN
R12	RESISTOR, Fixed, film, 499 ohms, 1%, 1/8 w	16299	NA55499R1%	4703-0164-00	PAFZZN
R13	RESISTOR, Fixed, film, 255 ohms, 1%, 1/8 w	16299	NA55255R1%	4703-0136-00	PAFZZN
R14	Same as R11				
R15	RESISTOR, Fixed, film, 7.5k ohms, 1%, 1/8 w	16299	NA557.5K1%	4703-0277-00	PAFZZN
R16 thru R18	RESISTOR, Fixed, composition, 4.7k ohms, 5%, 1/4 w	81349	RC07GF472J	4700-0413-00	PAFZZN
R19	RESISTOR, Fixed, film, 2k ohms, 1% 1/8 w	16299	NA552K1%	4703-0222-00	PAFZZN
R20	RESISTOR, Fixed, film, 15k ohms, 1%, 1/8 w	16299	NA5515K1%	4703-0306-00	PAFZZN
R21	RESISTOR, Fixed, film, 12.1k ohms, 1%, 1/8 w	16299	NA5512.1K1%	4703-0297-00	PAFZZN
R22	Same as R19				
R23	RESISTOR, Fixed, film, 7.68k ohms, 1%, 1/8 w	16299	NA557.68K1%	4703-0278-00	PAFZZN
R24	RESISTOR, Fixed, film, 7.32k ohms, 1%, 1/8 w	16299	NA557.32K1%	4703-0276-00	PAFZZN
R25	Same as R23				
R26	RESISTOR, Fixed, film, 2.49k ohms, 1%, 1/8 w	16299	NA552.49K1%	4703-0231-00	PAFZZN
R27	Same as R20				
R28	Same as R10				
R29	Same as R11				
R30	RESISTOR, Fixed, composition, 5.6k ohms, 5%, 1/4 w	81349	RC07GF562J	4700-0415-00	PAFZZN
R31	RESISTOR, Fixed, composition, 390k ohms, 5%, 1/4 w	81349	RC07GF394J	4700-0459-00	PAFZZN
R32	RESISTOR, Fixed, composition, 39k ohms, 5%, 1/4 w	81349	RC32GF393J	4700-1035-00	PAFZZN
R33	Same as R32				
R34	Same as R31				
R35	Same as R16				
R36	Same as R16				
R37	RESISTOR, Fixed, composition, 680 ohms, 5%, 1/4 w	81349	RC07GF681J	4700-0393-00	PAFZZN
R38	RESISTOR, Fixed, composition, 2.2k ohms, 5%, 1/4 w	81349	RC07GF222J	4700-0405-00	PAFZZN
R39	Same as R30				
R40	Same as R30				
R41	RESISTOR, Fixed, composition, 120k ohms, 5%, 1/4 w	81349	RC07GF124J	4700-0447-00	PAFZZN
R42	Same as R32				
R43	Same as R32				
R44	Same as R41				
R45	Same as R16				
R46	Same as R37				
R47	Same as R38				
R48	Same as R30				
R49	RESISTOR, Fixed, composition, 10k ohms, 5%, 1/2 w	81349	RC20GF103J	4700-0721-00	PAFZZN
R50	RESISTOR, Fixed, composition, 10k ohms, 5%, 1/4 w	81349	RC07GF103J	4700-0421-00	PAFZZN
R51	RESISTOR, Fixed, composition, 3k ohms, 5%, 1/4 w	81349	RC07GF302J	4700-0408-00	PAFZZN
R52	Same as R32				
R53	RESISTOR, Fixed, film, 4.02k ohms, 1%, 1/8 w	16299	NA554.02K1%	4703-0251-00	PAFZZN
R54	RESISTOR, Fixed, film, 16.2k ohms, 1%, 1/8 w	16299	NA5516.2K1%	4703-0309-00	PAFZZN
R55	RESISTOR, Fixed, film, 750k ohms, 1%, 1/4 w	16299	NA60750K1%	4704-0469-00	PAFZZN
R56	RESISTOR, Fixed, composition, 100k ohms, 5%, 1/4 w	81349	RC07GF104J	4700-0445-00	PAFZZN

Fig. & ref no.	Description	Mfr code	Mfr part no.	Halcyon part no.	SMR code
Fig. 6-34	(Continued)				
R57	RESISTOR, Fixed, composition, 12k ohms, 5%, 1/4 w	81349	RC07GF123J	4700-0423-00	PAFZZN
U1	INTEGRATED CIRCUIT	04713	MC14549CP	3130-4549-00	PAFZZN
U2	INTEGRATED CIRCUIT	04713	MC14042CP	3130-4042-00	PAFZZN
U3	INTEGRATED CIRCUIT	04713	MC14502CP	3130-4502-00	PAFZZN
U4	INTEGRATED CIRCUIT	04713	MC14049CP	3130-4049-00	PAFZZN
U5	Same as U2				
U6	INTEGRATED CIRCUIT	04713	MC1408L-8	3130-1408-00	PAFZZN
U7	INTEGRATED CIRCUIT	04713	MC14528CP	3130-4528-00	PAFZZN
U8	Same as U6				
U9	Same as U2				
U10	Same as U3				
U11	Same as U4				
U12	Same as U2				
U13	INTEGRATED CIRCUIT	01295	SN72301AL	3131-0001-00	PAFZZN
U14	Same as U13				
U15	INTEGRATED CIRCUIT	04713	MC14011CP	3130-4011-00	PAFZZN
U16	Same as U13				
U17	Same as U2				
U18	Same as U3				
U19	Same as U4				
U20	Same as U2				
U21	Same as U6				
U22	INTEGRATED CIRCUIT	01295	SN72306L	3131-0003-00	PAFZZN
U23	INTEGRATED CIRCUIT	04713	MC14027CP	3130-4027-00	PAFZZN
U24	Same as U13				
U25	INTEGRATED CIRCUIT	32293	IH5018	3132-0004-03	PAFZZN
U26	Same as U2				
U27	Same as U3				
U28	Same as U4				
U29	Same as U2				
U30	Same as U13				
VR1	SEMICONDUCTOR DEVICE, Diode	81349	1N751A	4802-0751-00	PAFZZN
XU1 thru XU12	SOCKET, Plug-in electronic components, 16 contacts	91506	216-AG39D	2101-0000-02	PAFZZN
XU13	SOCKET, Plug-in electronic components, 8 contacts	91506	208-AG39D	2101-0000-00	PAFZZN
XU14	Same as XU13				
XU15	SOCKET, Plug-in electronic components, 14 contacts	91506	214-AG39D	2101-0000-01	PAFZZN
XU16	Same as XU13				
XU17 thru XU21	Same as XU1				
XU22	Not used				
XU23	Same as XU1				
XU24	Same as XU13				
XU25	Same as XU13				
XU26 thru XU29	Same as XU1				
XU30	Same as XU13				

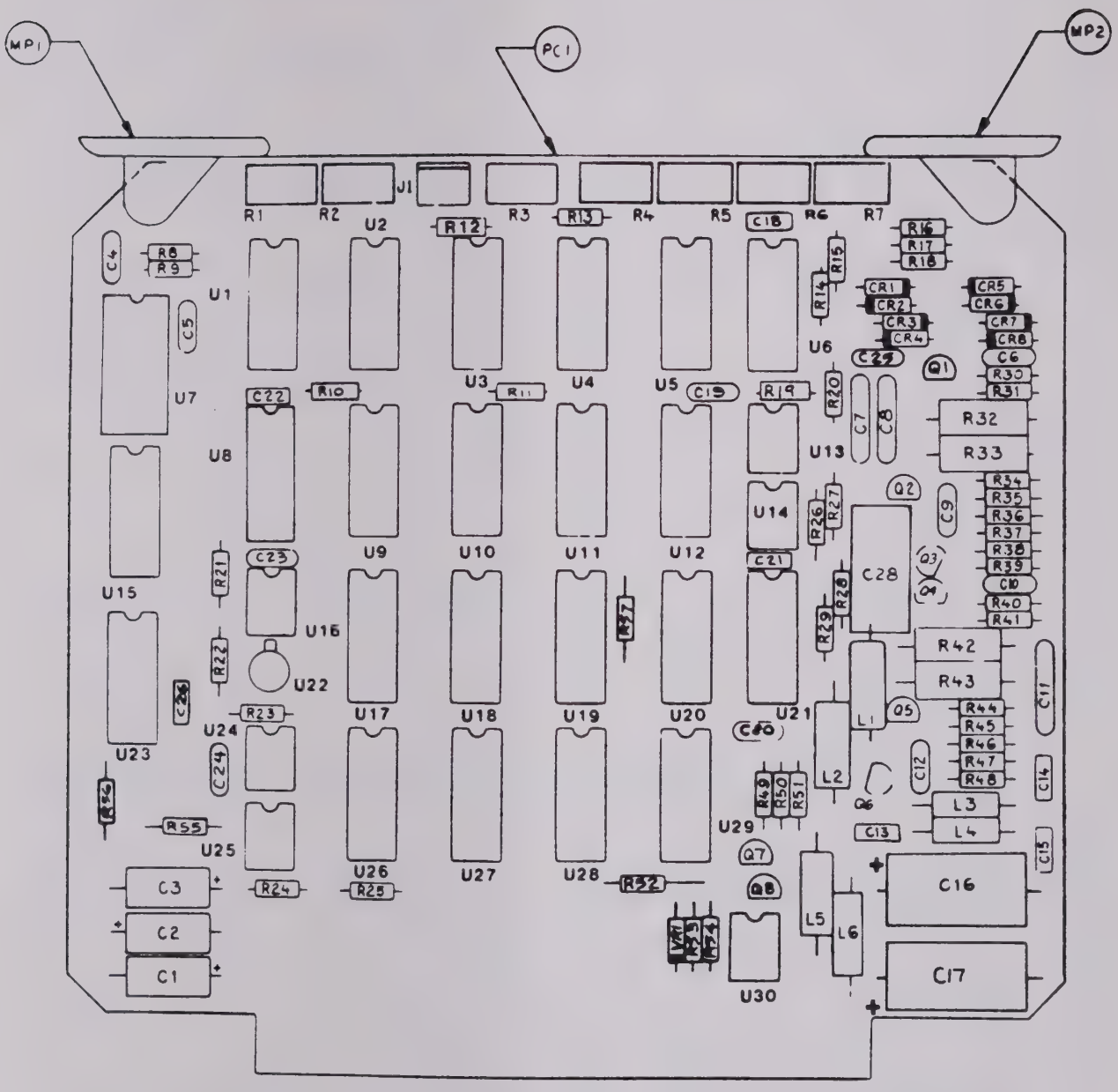

Figure 6-34. CRT Deflection Circuit Card Assembly 2A4

Fig. & ref no.	Description	Mfr code	Mfr part no.	Halcyon part no.	SMR code
Fig. 6-35	RANDOM ACCESS MEMORY CIRCUIT CARD ASSY (See fig. 6-27, ref no. A5, for nha)	51701		8000-1098-00	PAFFP
C1	CAPACITOR, Fixed, plastic, 10 uF, 10%, 20 vdcw	56289	150D106X9020B2	1503-0181-00	PAFZZN
C2 thru C6	CAPACITOR, Fixed, ceramic, 0.01 uF, 10%, 200 vdcw	81349	CK06BX103K	1501-0062-00	PAFZZN
IC1	INTEGRATED CIRCUIT	04713	MC14027CP	3130-4027-00	PAFZZN
IC2	INTEGRATED CIRCUIT	04713	MC14001CP	3130-4001-00	PAFZZN
IC3	INTEGRATED CIRCUIT	04713	MC14502CP	3130-4502-00	PAFZZN
IC4	Same as IC3				
IC5	Same as IC1				
IC6	INTEGRATED CIRCUIT	04713	MC14011CP	3130-4011-00	PAFZZN
IC7	INTEGRATED CIRCUIT	04713	MC14516CP	3130-4516-00	PAFZZN
IC8	Same as IC7				
IC9	INTEGRATED CIRCUIT	34335	AM9112CPC	3130-2112-02	PAFZZN
IC10	Same as IC2				
IC11	INTEGRATED CIRCUIT	04713	MC14049CP	3130-4049-00	PAFZZN
IC12	Same as IC6				
IC13	Same as IC9				
IC14	Same as IC6				
IC15	Same as IC11				
IC16	Same as IC2				
IC17	Same as IC6				
IC18	Same as IC9				
IC19	INTEGRATED CIRCUIT	04713	MC14028CP	3130-4028-00	PAFZZN
IC20	INTEGRATED CIRCUIT	04713	MC14518CP	3130-4518-00	PAFZZN
IC21	Same as IC6				
IC22	Same as IC20				
IC23	Same as IC9				
MP1	EXTRACTOR, Electrical card	18677	S-203	1401-0011-00	PAFZZN
MP2	Same as MP1				
PC1	PRINTED WIRING BOARD	51701		1700-1098-00	XAFZZ
R1	RESISTOR, Fixed, composition, 2.7 megohms, 5% 1/4 w	81349	RC07GF275J	4700-0479-00	PAFZZN
R2 thru R26	RESISTOR, Fixed, composition, 20k ohms, 5%, 1/4 w	81349	RC07GF203J	4700-0428-00	PAFZZN
XIC1	SOCKET, Plug-in electronic components, 16 contacts	91506	216-AG39D	2101-0000-02	PAFZZN
XIC2	SOCKET, Plug-in electronic components, 14 contacts	91506	214-AG39D	2101-0000-01	PAFZZN
XIC3 thru XIC5	Same as XIC1				
XIC6	Same as XIC2				
XIC7 thru XIC9	Same as XIC1				
XIC10	Same as XIC2				
XIC11	Same as XIC1				
XIC12	Same as XIC2				
XIC13	Same as XIC1				
XIC14	Same as XIC2				
XIC15	Same as XIC1				
XIC16	Same as XIC2				
XIC17	Same as XIC2				

Fig. & ref no.	Description	Mfr code	Mfr part no.	Halcyon part no.	SMR code
Fig. 6-35	(Continued)				
XIC18 thru XIC20	Same as XIC1				
XIC21	Same as XIC2				
XIC22	Same as XIC1				
XIC23	Same as XIC1				
Y1	CRYSTAL UNIT, Quartz, 1 MHz, 0.005%	51701		2300-0001-00	PAFZZN

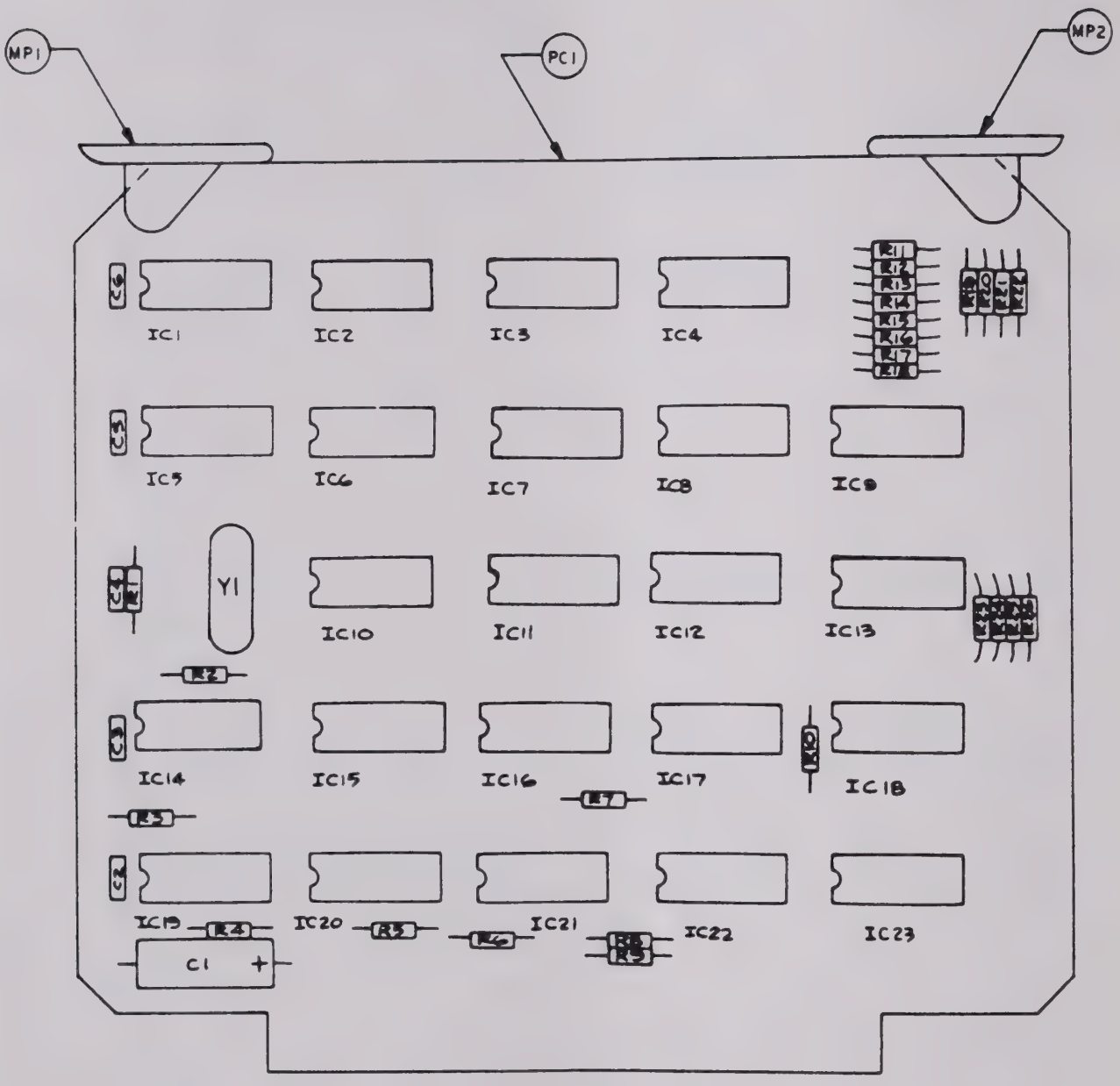

Figure 6-35. Random Access Memory Circuit Card Assembly 2A5

☆U.S. GOVERNMENT PRINTING OFFICE: 1982-569-062/74

GLOSSARY

dBm0	Decibels referenced to TLP
dBrn	Decibels of noise referenced to -90 dBm (90 dB below 1 milliwatt)
dBrn0	Decibels of noise referenced to TLP
dBrnc	Decibels of noise referenced to -90 dBm on C-message weighted line
Dropout	Short interruption of service lasting 4 milliseconds or more
Gain hit	Gain perturbation which exceeds an established gain threshold for more than 4 milliseconds
Hit	Perturbation in gain or phase which exceeds an established threshold for more than 4 milliseconds
Phase hit	Phase shift which exceeds an established threshold for more than 4 milliseconds
P/AR	Peak-to-average ratio of test signal
TLP	Transmission level point - a reference level numerically equal to the level of a standard milliwatt tone at that point on the line

ADDENDUM

BILLS OF MATERIAL AD-2-5

520B2-07/17 Nonlinear Distortion Measurement
Operation Procedures AD-6-7
(Pages 3-33 - 3-34 of old manual)

520B2 Plug-In Calibration.
1019-00PCB in slot 1A11 . . . . . AD-8-9
(Pages 5-18 - 5-19 of old manual)

FO-27. Model 520B3 PCB Assembly
Sweep and VCO Board. (Part of 520B3-17)
Schematic Diagram (1 of 2) AD-10

FO-27. Model 520B3 PCB Assembly
Sweep and VCO Board. (Part of 520B3-17)
Schematic Diagram (2 of 2) AD-11

FO-28. Model 520B3 Sweep and VCO Board.
(Part of 520B3-17) Schematic Diagram (1 of 3) AD-12

FO-28. Model 520B3 Sweep and VCO Board.
(Part of 520B3-17) Schematic Diagram (2 of 3) AD-13

FO-28. Model 520B3 Sweep and VCO Board.
(Part of 520B3-17) Schematic Diagram (3 of 3) AD-14

PRINTED 23-Oct-85 02:05 PM * * * HALCYON, INC. * * * EML VERSION 18-Nov-83 PAGE 1

EFFECTIVITY DATE: ALL

S I N G L E L E V E L B I L L S O F M A T E R I A L

PARENT PART: 8000-0521-15 PCB ASSY - SWEEP & VCO 52083 UM: EA PROD CODE: CF ECN: 2189 ASSEMBLY QTY: 1
ERC: D1 SRCE CODE: A TYPE: 1 ABC: B PLAN CODE: P DATE: 09-Apr-85

ITEM NO	COMPONENT PART NUMBER	E &	DESCRIPTION / REMARKS	PR CD	COMM CODE	S C	T Y	S P	A B	P L	UM	EXTENDED QTY PER	START DATE	START S/N	CLOSE DATE	CLOSE S/N	OPR SEQ	LT OFF	STORES ACCOUNT
005	1401-0011-00	+	EJECTOR-PCB MP1,2	ZZ		P	1		A	P	EA	2	09-Dec-83				10	0	CENTRAL
010	1500-0138-00	+	C-FXD MICA 220PF 5% 500V C20,21,80,90,140	ZZ		P	1		C	P	EA	5	18-Nov-83				10	0	CENTRAL
015	1500-5216-00	+	C-FXD MICA 5600PF 1% 300V C134	ZZ		P	1		B	P	EA	1	18-Nov-83				10	0	CENTRAL
020	1501-0078-00		C-FXD CER .22UF 10% 50V .2 SP C61	ZZ		P	1		B	P	EA	1	25-Oct-83				10	0	CENTRAL
025	1501-0082-00		C-FXD CER .47UF 10% 50V .2 SP C31	ZZ		P	1		B	P	EA	1	25-Oct-83				10	0	CENTRAL
027	1501-0090-04	+	C-FXD CER .022UF 20% 50V .1 SP C30,120	ZZ		P	1		C	P	EA	2	14-Dec-83				10	0	CENTRAL
030	1501-0090-09	+	C-FXD CER .1UF -20+80% 50V .1 SP C4-9,11-17,60,131,161,163,170,172	ZZ		P	1		C	P	EA	19	14-Dec-83				10	0	CENTRAL
035	1504-0654-00	+	C-FXD AL 47UF -10+50% 25V RADIAL C1,2,3,70,100,101,132,160,162,171,173	GZ		P	1		B	P	EA	11	09-Jan-84				10	0	CENTRAL
055	1505-0006-00		C-FXD AL NON-POLAR 50UF 20% 15V C10	CF		P	1		A	P	EA	1	18-Oct-83				10	0	CENTRAL
057	1700-0521-15	X D	PCB FAB - SWEEP & VCO -52083 PC1	CF		P	1		A	P	EA	1	18-Nov-83				10	0	CENTRAL
058	2100-0001-00	+	CON-TEST POINT PCB WHITE TP1,2,4,5,7,8,10,11	GZ		P	1		B	P	EA	8	09-Jan-84				10	0	CENTRAL
059	2100-0002-00	+	CON-TEST POINT PCB RED TP3,6,9	GZ		P	1		B	P	EA	3	09-Jan-84				10	0	CENTRAL
060	2101-0000-00	+	IC-SOCKET FORMED 8 PIN .3X.1 CTRS SCKT 1,2,3,6,7,9,12,13,16,17	ZZ		P	1		A	P	EA	10	17-Oct-83				10	0	CENTRAL
065	2101-0000-01	+	IC-SOCKET FORMED 14 PIN .3X.1 CTRS SCKT 5,8,11,14,15,18	ZZ		P	1		A	P	EA	6	17-Oct-83				10	0	CENTRAL
070	2101-0000-02	+	IC-SOCKET FORMED 16 PIN .3X.1 CTRS SCKT 4,10	ZZ		P	1		A	P	EA	2	17-Oct-83				10	0	CENTRAL
080	3130-4011-00		IC-4011 QUAD 2 INPUT NAND GATE U8,11	GZ		P	1		B	P	EA	2	17-Oct-83				10	0	CENTRAL
082	3131-0005-00	+	IC-1458 DUAL LINEAR OP AMP U1,2,3,6,7,9,13,16,17	GZ		P	1		B	P	EA	9	12-Jul-84				10	0	CENTRAL
095	3131-0319-00	+	IC-LM319 HIGH SPEED DUAL COMPARATOR U14	ZZ		P	1		B	P	EA	1	17-Oct-83				10	0	CENTRAL
097	3131-0393-00	+	IC-LM393 VOLTAGE COMPARATOR U12	GZ		P	1		B	P	EA	1	12-Jul-84				10	0	CENTRAL
100	3132-0004-02	+	IC-5014 3 CHANNEL ANALOG SWITCH U5	GZ		P	1		B	P	EA	1	17-Oct-83				10	0	CENTRAL
105	3132-0012-03	+	IC-201 QUAD SPST ANALOG SWITCH U4,10	ZZ		P	1		A	P	EA	2	17-Oct-83				10	0	CENTRAL

TO 33D7-38-134-1

EFFECTIVITY DATE: ALL

SINGLE LEVEL BILLS OF MATERIAL

PARENT PART: 8000-0521-15 PCB ASSY - SWEEP & VCO 520B3 UM: EA PROD CODE: CF ECN: 2189 ASSEMBLY QTY: 1
ERC: D1 SRCE CODE: A TYPE: 1 ABC: B PLAN CODE: P DATE: 09-Apr-85

ITEM NO	COMPONENT PART NUMBER	E R	DESCRIPTION REMARKS	PR CD	COMM CODE	S C	T Y	S D	A B	P L	UM	EXTENDED QTY PER	START DATE	S/N	CLOSE DATE	S/N	OPR SEQ	LT OFF	STORES ACCOUNT
110	3132-0035-00		IC-2720 DIP 7-DIODE ARRAY U15,18	GZ		P	1		A	P	EA	2	17-Oct-83				10	0	CENTRAL
115	4700-0437-00	+	R-FXD CC 47K OHM 5% 1/4W R65,81,92,93	ZZ		P	1		C	P	EA	4	14-Mar-85				10	0	CENTRAL
125	4702-0396-00		R-FXD MF 5.11K OHM .1% 1/4W R163,164	GZ		P	1		A	P	EA	2	16-Nov-83				10	0	CENTRAL
130	4703-0110-00	+	R-FXD MF 137 OHM 1% 1/4W R155,187	GZ		P	1		B	P	EA	2	25-Oct-83				10	0	CENTRAL
132	4703-0114-00	+	R-FXD MF 150 OHM 1% 1/4W R14,74,132,154,170, 173,186	JZ		P	1		B	P	EA	7	16-Nov-83				10	0	CENTRAL
135	4703-0117-00	+	R-FXD MF 162 OHM 1% 1/4W R153,185	JZ		P	1		B	P	EA	2	15-Oct-83				10	0	CENTRAL
150	4703-0130-00	+	R-FXD MF 221 OHM 1% 1/4W R152,184	GZ		P	1		B	P	EA	2	25-Oct-83				10	0	CENTRAL
155	4703-0141-00	+	R-FXD MF 287 OHM 1% 1/4W R151,183	JE		P	1		B	P	EA	2	16-Nov-83				10	0	CENTRAL
160	4703-0158-00	+	R-FXD MF 432 OHM 1% 1/4W R156,188	GZ		P	1		B	P	EA	2	25-Oct-83				10	0	CENTRAL
165	4703-0167-00	+	R-FXD MF 536 OHM 1% 1/4W R15,150,182	JZ		P	1		B	P	EA	3	14-Dec-83				10	0	CENTRAL
170	4703-0196-00	+	R-FXD MF 1.07K OHM 1% 1/4W R12,125,161,181	JZ		P	1		B	P	EA	4	12-Jul-84				10	0	CENTRAL
171	4703-0210-00	+	R-FXD MF 1.50K OHM 1% 1/4W R75,133,171,172	GZ		P	1		B	P	EA	4	09-Jan-84				10	0	CENTRAL
172	4703-0222-00	+	R-FXD MF 2.00K OHM 1% 1/4W R10,13,165	ZZ		P	1		B	P	EA	3	07-Mar-85				10	0	CENTRAL
173	4703-0231-00	+	R-FXD MF 2.49K OHM 1% 1/4W R33	GZ		P	1		B	P	EA	1	18-Nov-83				10	0	CENTRAL
175	4703-0242-00	+	R-FXD MF 3.24K OHM 1% 1/4W R180	GZ		P	1		B	P	EA	1	25-Oct-83				10	0	CENTRAL
180	4703-0245-00	+	R-FXD MF 3.48K OHM 1% 1/4W R144	GZ		P	1		B	P	EA	1	18-Nov-83				10	0	CENTRAL
181	4703-0250-00	+	R-FXD MF 3.92K OHM 1% 1/4W R32	GZ		P	1		B	P	EA	1	18-Nov-83				10	0	CENTRAL
182	4703-0253-00	+	R-FXD MF 4.22K OHM 1% 1/4W R124,140,143	JZ		P	1		B	P	EA	3	16-Nov-83				10	0	CENTRAL
185	4703-0259-00	+	R-FXD MF 4.87K OHM 1% 1/4W R20	CF		P	1		B	P	EA	1	09-Jan-84				10	0	CENTRAL
190	4703-0270-00	+	R-FXD MF 6.34K OHM 1% 1/4W R159	GZ		P	1		B	P	EA	1	25-Oct-83				10	0	CENTRAL
195	4703-0280-00	+	R-FXD MF 8.06K OHM 1% 1/4W R142,147	GZ		P	1		B	P	EA	2	16-Nov-83				10	0	CENTRAL
200	4703-0288-00	+	R-FXD MF 9.76K OHM 1% 1/4W R158	GZ		P	1		B	P	EA	1	25-Oct-83				10	0	CENTRAL

PRINTED 23-Oct-85 02:06 PM * * * HALCYON, INC. * * * EML VERSION 18-Nov-83 PAGE 3

EFFECTIVITY DATE: ALL

S I N G L E L E V E L B I L L S O F M A T E R I A L

PARENT PART: 8000-0521-15 PCB ASSY - SWEEP & VCO 520B3 UM: EA PROD CODE: CF ECN: 2189 ASSEMBLY QTY: 1
ERC: D1 SRCE CODE: A TYPE: 1 ABC: B PLAN CODE: P DATE: 09-Apr-85

ITEM NO	COMPONENT PART NUMBER	E R	DESCRIPTION REMARKS	PR CD	COMM CODE	S C	T Y	S F	A B	P L	UM	EXTENDED QTY PER	START DATE	S/N	CLOSE DATE	S/N	OPR SEQ	LT OFF	STORES ACCOUNT
205	4703-0289-00	+	R-FXD MF 10.0K OHM 1% 1/4W R62,70,71,72,73,121, 123,130,131	ZZ		P	1	B	P	EA	9	18-Nov-83				10	0	CENTRAL
210	4703-0303-00	+	R-FXD MF 14.0K OHM 1% 1/4W R120	GZ		P	1	B	P	EA	1	25-Oct-83				10	0	CENTRAL
215	4703-0309-00	+	R-FXD MF 16.2K OHM 1% 1/4W R157	GZ		P	1	B	P	EA	1	25-Oct-83				10	0	CENTRAL
216	4703-0319-00	+	R-FXD MF 20.5K OHM 1% 1/4W R90,160	GZ		P	1	B	P	EA	2	16-Nov-83				10	0	CENTRAL
220	4703-0331-00	+	R-FXD MF 27.4K OHM 1% 1/4W R53	CF		P	1	B	P	EA	1	25-Oct-83				10	0	CENTRAL
225	4703-0334-00	+	R-FXD MF 29.4K OHM 1% 1/4W R91	DE		P	1	B	P	EA	1	25-Oct-83				10	0	CENTRAL
230	4703-0355-00	+	R-FXD MF 48.7K OHM 1% 1/4W R50	GZ		P	1	B	P	EA	1	16-Nov-83				10	0	CENTRAL
235	4703-0388-00	+	R-FXD MF 107K OHM 1% 1/4W R94,126	GZ		P	1	B	P	EA	2	18-Nov-83				10	0	CENTRAL
245	4703-0399-00	+	R-FXD MF 140K OHM 1% 1/4W R80	ZZ		P	1	B	P	EA	1	25-Oct-83				10	0	CENTRAL
255	4703-0409-00	+	R-FXD MF 178K OHM 1% 1/4W R60,61,95	GZ		P	1	B	P	EA	3	16-Nov-83				10	0	CENTRAL
260	4703-0453-00	+	R-FXD MF 511K OHM 1% 1/4W R63	DD		P	1	B	P	EA	1	16-Nov-83				10	0	CENTRAL
262	4703-0465-00	+	R-FXD MF 681K OHM 1% 1/4W R51	DD		P	1	B	P	EA	1	16-Nov-83				10	0	CENTRAL
265	4703-0481-00	+	R-FXD MF 1.00M OHM 1% 1/4W R100	ZZ		P	1	B	P	EA	1	25-Oct-83				10	0	CENTRAL
270	4710-0016-59	+	R-PAK 6 PIN 5 RES 47K OHM 2% RP3	GZ		P	1	A	P	EA	1	09-Jan-84				10	0	CENTRAL
272	4710-0017-59	+	R-PAK 8 PIN 4 RES 47K OHM 2% RP1,2	EE		P	1	A	P	EA	2	16-Nov-83				10	0	CENTRAL
273	4750-0005-00	+	R-VAR PC 1T 200 OHM 20% 1/2W .15SP R4	CG		P	1	B	P	EA	1	09-Jan-84				10	0	CENTRAL
275	4750-0007-00	+	R-VAR PC 1T 1K OHM 20% 1/2W .15SP R1,2	GZ		P	1	B	P	EA	2	09-Jan-84				10	0	CENTRAL
277	4750-0008-00	+	R-VAR PC 1T 2K OHM 20% 1/2W .15SP R6	GZ		P	1	B	P	EA	1	09-Jan-84				10	0	CENTRAL
280	4750-0009-00	+	R-VAR PC 1T 5K OHM 20% 1/2W .15SP R3	GZ		P	1	B	P	EA	1	09-Jan-84				10	0	CENTRAL
300	4750-0013-00	+	R-VAR PC 1T 50K OHM 20% 1/2W .15SP R5,7	GZ		P	1	B	P	EA	2	09-Jan-84				10	0	CENTRAL
315	4800-3904-00	+	TRANSISTOR-2N3904 NPN TO-92 Q2,4	ZZ		P	1	A	P	EA	2	16-Nov-83				10	0	CENTRAL
320	4800-3906-00	+	TRANSISTOR-2N3906 PNP TO-92 Q1,3	ZZ		P	1	A	P	EA	2	16-Nov-83				10	0	CENTRAL

EFFECTIVITY DATE: ALL

S I N G L E L E V E L B I L L S O F M A T E R I A L

PARENT PART: 8000-0521-15 PCB ASSY - SWEEP & VCO 520B3 UM: EA PROD CODE: CF ECN: 2189 ASSEMBLY QTY: 1
ERC: D1 SRCE CODE: A TYPE: 1 ABC: B PLAN CODE: P DATE: 09-Apr-85

ITEM NO	COMPONENT PART NUMBER	E R	DESCRIPTION REMARKS	PR CD	COMM CODE	S C	T Y P	S B	A L	P UM	EXTENDED QTY PER	START DATE	S/N	CLOSE DATE	S/N	OPR SEQ	LT OFF	STORES ACCOUNT
330	4802-0751-00	+	DIODE-1N751A 5.1 V ZENER VR10,11	GZ		P	1	A	P	EA	2	25-Oct-83				10	0	CENTRAL
335	4802-0825-00		DIODE-1N825A 6.2 V ZENER REFERENCE VR160	GZ		P	1	A	P	EA	1	25-Oct-83				10	0	CENTRAL
340	4802-4148-00	+	DIODE-1N4148 200 MA 75 V CR20,21,80	ZZ		P	1	B	P	EA	3	25-Oct-83				10	0	CENTRAL
345	4802-5297-00	+	DIODE-1N5297 CURRENT REGULATING CL 1,2	ZZ		P	1	A	P	EA	2	25-Oct-83				10	0	CENTRAL
360	6000-0700-09	+	WIRE-KYNAR 26 AWG SOLID WHITE	ZZ		X	1	B	P	FT	0.1000	07-Mar-85				10	0	CENTRAL
998	ED-0521-15	D1	ASSY - SWEEP & VCO 520B3 REF	D	*	*	U			EA	0	12-Jul-84				10	0	CENTRAL
999	SD-0521-15	D1	SCHEM SWEEP & VCO BD , 520B3 REF	D	*	*	U			EA	0	18-Oct-83				10	0	CENTRAL

NOTES:

REV D1, ECO 2189, 07 MAR 85

(1) Near-End to Far-End Measurements. (See figure 3-18.) The near-end (transmitting) procedure is as follows:

(a) Verify or perform initial setup procedures (paragraph 3-4). Connect near-end TRANSMIT to far-end RECEIVE.

(b) Use SELECT switches (8) to step mode indicator (9) to NONLINEAR, dB. Verify that 4 TONE P/AR indicator (34) lights.

(c) Notify far-end operator that you are sending the 4-tone test signal at an applied level of -13 dBm0, and to proceed with nonlinear distortion measurements.

(d) When requested by far-end operator, press S/N switch (16) to allow noise contribution to be determined at far end. Readings should be in accordance with parameters of system under test.

(2) Far-End to Near-End Measurements. The procedure for measuring nonlinear distortion is determined by the 520B2 configuration in use. Current models (serial number 2352 and above) employ automatic gain control and are operated as described in (a) below. Earlier models of the 520B2 (serial number 2351 and lower), requiring manual gain control, are operated as described in paragraph (b).

(a) Nonlinear Distortion Measurements, Automatic Gain Control. (See figure 3-18.)

1. Verify or perform initial setup procedures (paragraph 3-4). Connect far-end TRANSMIT to near-end RECEIVE. For 2-wire circuits set TRANSMIT FUNCTION switch (38) to XFR.

2. Use SELECT switches (8) to step mode indicator (9) to AMP RESP, dB. Depress RCV/XMT switch (19) so that receive indicator (21) lights.

3. Request far-end operator to send 4-tone signal at -13 dBm0.

4. Verify that received signal (13) is at approximate expected level. The signal level is automatic-gain-controlled for this test and needs only to be within ±8 dB of the equivalent value of LEVEL IN attenuator setting (1).

5. Use SELECT switches (8) to step mode indicator (9) to NONLINEAR, dB.

6. Set 2nd/3rd order switch (14) to 2nd position.

7. Read and record value indicated on primary display (13). This represents the uncorrected 2nd-order distortion measurement value.

8. Set 2nd/3rd order switch (14) to 3rd position.

9. Read and record value indicated on primary display (13). This represents the uncorrected 3rd-order distortion measurement value.

10. Request far-end operator to switch the transmitter signal mode so as to send the S/N test signal. This will now allow the noise contribution to be determined.

11. Read and record noise value shown on primary display (13). The indicated value may be used to correct the 3rd-order measurement reading obtained in step 9 above. This is typically done only when the uncorrected reading is marginal or slightly below acceptable limits. The correction procedure is as follows:

a. Determine the difference between values obtained in steps 9 and 11.

b. Use the difference value to obtain a correction factor from the graph in figure 3-19.

c. Add the correction factor to the value obtained in step 9.

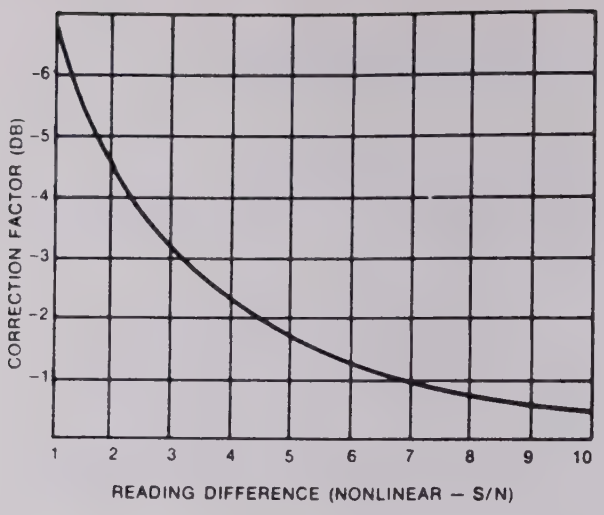

DIFFERENCE (dB)	1	2	3	4 5	6 - 9
CORRECTION (dB)	7	5	3	2	1

Licensed under U.S. Patent # 3 862 380

Figure 3-19. Nonlinear Distortion Correction

The result is the true 3rd-order nonlinear distortion in terms of dB below the transmitted tone level.

12. Correct the 2nd-order distortion value by the same method described above, using the values recorded in step 9.

(b) Nonlinear Distortion Measurements, Manual Gain Control. (See figure 3-20.)

1. Verify or perform initial setup procedures (paragraph 3-4). Connect far-end TRANSMIT to near-end RECEIVE. For 2-wire circuits set TRANSMIT FUNCTION switch (38) to XFR.

2. Use SELECT switches (8) to step mode indicator (9) to NOISE, dBrn0.

3. Request far-end operator to transmit 4-tone signal at an applied level of -13 dBm0.

4. Set C-MSG/3 KHz switch (6) to the 3 KHz (in) position.

5. Remove notch by pressing and holding S/N switch (16) while performing steps 6 and 7.

6. Adjust LEVEL IN attenuator (1) to bring primary display (13) within 1 dB of 90 dBrn0.

7. Adjust DISPLAY OFFSET control (17) to obtain a display toggling between 89 and 90 dBrn0.

8. Perform nonlinear distortion measurements, paragraph 3-5g(2)(a), steps 5 through 12.

NOTE

At completion of measurements, return DISPLAY OFFSET control (17) to CAL position, return LEVEL IN attenuator (1) to expected receive data level position, and return C-MSG/3 KHz switch (6) to C-MSG (out) position.

h. Hit Measurement. Transient impairments, consisting of gain hits, phase hits, dropouts, and three-level impulse noise perturbations are measured using a holding tone applied at the far end of the circuit. The holding tone frequency should be within the range of 995 Hz to 1025 Hz and should be applied at -13 dBm0 data level. The holding tone serves to dynamically load the circuit under test and also functions as a reference level for the hit measurements.

The 520B2 incorporates individual counting registers for each of the hit parameters, including three separate registers for impulse-noise measurements. Counting circuitry is interrelated so as to inhibit all other transient functions for 143 milliseconds plus the duration of a dropout. Similarly, the occurrence of a gain hit or phase hit will inhibit impulse noise-counting circuitry for 143 milliseconds

ADDENDUM

If your unit has a 1019-00PCB please substitute the following adjustments.

c. Model 520B2 Plug-In Calibration.

(1) Depress POWER switch.

(2) Adjust R16 on 1A11 for -6.25 Vdc at E2 on 1A11.

(3) Adjust R119 on 1A11 for +6.25 Vdc at E1 on 1A11.

(4) SELECT DELAY, uS mode and press RCV/XMT switch so that XMT indicator lights.

(5) TUNE transmitter frequency to 1000 Hz.

(6) Elevate circuit card 1A10 by means of board extender.

(7) On that circuit card, temporarily ground pin 4 of IC21 and adjust R10 for ac null at pin Z of edge connector. Remove ground from IC21.

(8) On 1A10, temporarily ground pin 9 of IC21 and adjust R11 for ac null at pin Z of edge connector. Leave ground on pin 9 of IC21.

(9) On 1A10, temporarily ground pin 4 of IC21 and adjust R12 for dc null at pin Z of edge connector.

(10) Remove both grounds from IC21 and reinstall in plug-in interconnect card.

(11) Elevate circuit card 1A11 by means of board extender.

(12) SELECT AMP RESP, dB mode.

(13) On that circuit card, adjust R8 to obtain -2.68 Vdc at pin 1 of IC19.

(14) On same card, adjust R12 to obtain +2.68 Vdc at pin 7 of IC19.

(15) Connect pin 7 of 1A11 to input of distortion analyzer. Adjust R10, R14, and R15 in that order to obtain minimum distortion. Distortion should be less than -46 dB.

(16) TUNE transmitter frequency to 300 Hz and check distortion, then repeat at 3500 Hz. At each frequency, distortion should be less than -46 dB. If it is not, repeat step (15) until distortion is less than -46 dB at 300, 1000, and 3500 Hz.

(17) Disconnect distortion analyzer and reinstall circuit card in plug-in interconnect card.

(18) Terminate transmitter output with 600±1 ohm termination and connect digital voltmeter (DVM) across termination.

(19) TUNE transmitter frequency to 1000 Hz and set R4 on 1A2 to mid-range.

(20) Adjust R121 on 1A10 for DVM reading of 0.77460 Vac.

(21) SELECT GAIN, dB mode.

(22) Adjust R14 on 1A4 for a DVM reading of 0.77460 Vac.

(23) SELECT AMP RESP, dB mode and turn TUNE control fully counterclockwise.

(24) Adjust R6 on 1A11 for indicated frequency of 150 Hz.

(25) Set CONT/SF switch to SF and TUNE transmitter frequency over range of 2000 to 3000 Hz. Frequency should skip a band of 285±35 Hz centered at 2600 Hz (for example, from 2460 to 2740 Hz).

(26) Set CONT/SF switch to CONT and SGL/AUTO/MAN switch to SGL.

(27) Adjust R3 on 1A11 for a high sweep limit of 3400 Hz, and R4 for a low sweep limit of 225 Hz.

(28) Set SGL/AUTO/MAN switch to AUTO and adjust R1 on 1A11 for continuous sweep.

(29) Set SWEEP RATE control fully clockwise and adjust R2 on 1A11 for sweep rate of 1.5 seconds.

(30) Apply 1004±1 Hz tone from signal generator to receiver at level of 0.77460 Vac.

(31) Unblank last digit of left-hand display (13, figure 3-1) by changing switch S1 on circuit card 1A9 to its up position. (Circuit card must be removed to provide access to S1.)

(32) Adjust R11 on 1A1A1A4 to obtain -5.800 Vdc at TP2 on 1A2.

(33) Adjust R89 on 1A3 to obtain reading of 0.00 on left-hand display.

(34) Reduce signal generator output to 0.24495 Vac and adjust R46 on 1A4 for display of -10.00.

(35) Reduce signal generator output to 0.07746 Vac and adjust R91 on 1A3 for display of -20.00.

(36) Repeat steps (30), (33), (34), and (35) until calibration is achieved. Then restore S1 on circuit card 1A9 to original position, which will blank last digit of left-hand display.

(37) Disconnect signal generator and elevate circuit card 1A3 by means of board extender.

(38) SELECT NOISE, dBrn0 mode and adjust R124 on elevated card for dc null at pin 1 of IC20.

(39) Reinstall circuit card in plug-in interconnect card.

(40) Apply 1004±1 Hz tone to receiver at level of 0.77460 Vac. Set C-MSG/3 KHz switch to 3 KHz.

(41) Adjust R79 on 1A3 so that display (13, figure 3-1) just changes from 89 to 90 when S/N switch is pressed.

(42) Disconnect signal generator and reset C-MSG/3 KHz switch to C-MSG.

(43) Connect TRANSMIT to RECEIVE and SELECT Ø JITTER, DEG. mode. Adjust R1 on 1A5 for optimum SID pattern.

(44) Connect oscilloscope between TP2 on 1A5 and ground, and adjust R3 on 1A5 for waveform having 50-percent duty cycle. Disconnect oscilloscope.

(45) Apply 1200±1 Hz tone to receiver at level between 0.07657 and 0.07836 Vac.

(46) Loop transmitter to receiver and TUNE transmitter frequency to 1004 ±1 Hz.

(47) Adjust R8 on 1A5 for display reading of 11.5.

(48) Reduce signal generator output to between 0.02421 and 0.02479 Vac, and adjust R7 on 1A5 for display reading of 3.5.

(49) Disconnect signal generator and adjust R4 on 1A5 for display reading of 0.0±0.1.

(50) Repeat steps (45) through (49) until calibration is achieved. Reconnect signal generator to receiver after completing step (49) each time.

(51) Set STD/STD+LF switch to STD+LF, and adjust R5 on 1A5 for display reading of 0.0.

(52) Apply 994±1 Hz tone to receiver at level between 0.07657 and 0.07836 Vac.

(53) Adjust R2 on 1A5 for display reading of 10.9, then disconnect transmitter-to-receiver loop.

(54) Change signal generator frequency to 1000±1 Hz, set generator

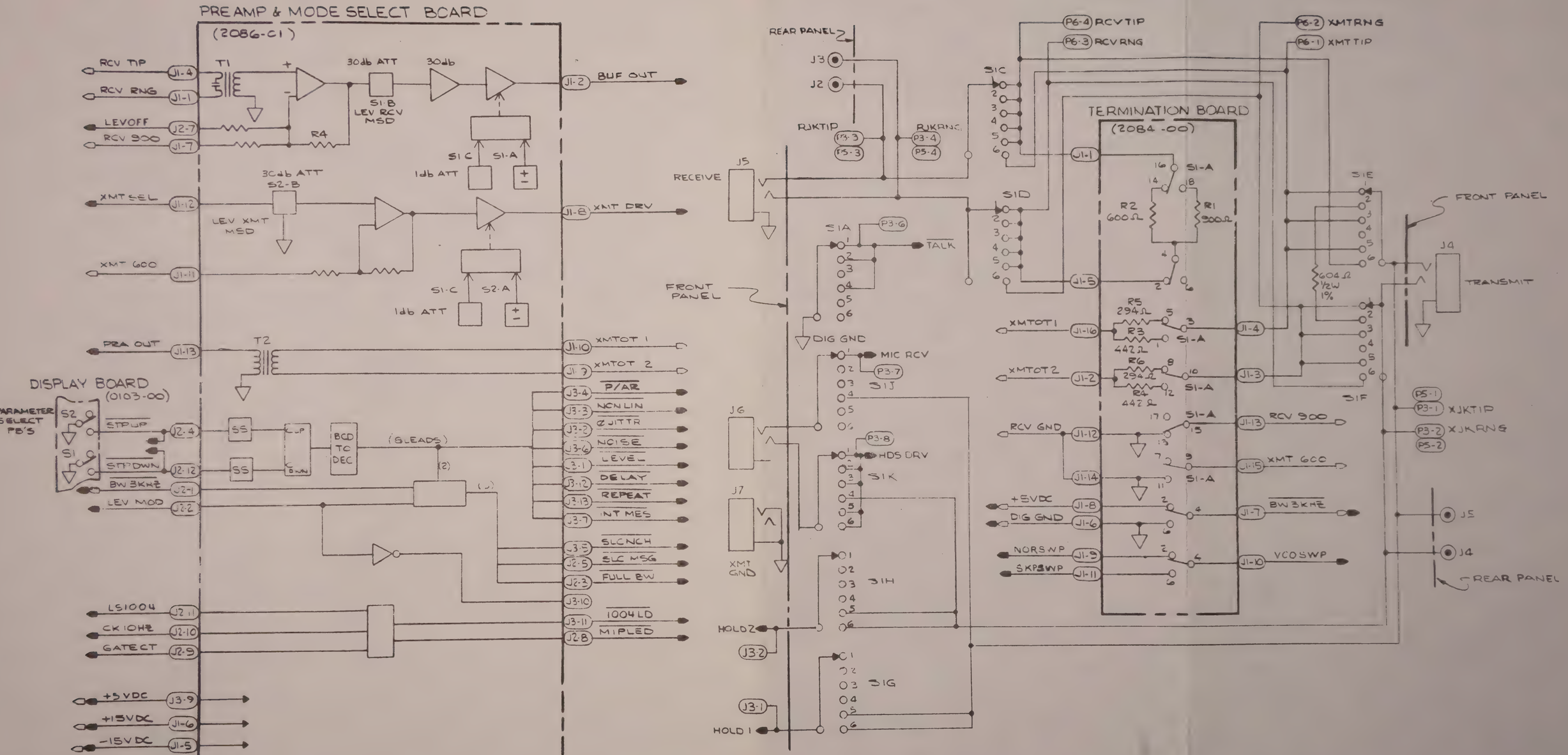

Figure FO-1. Model 520B2 Plug-In Without P/AR (Part of 520B2-07), Overall Diagram (Sheet 1 of 8)

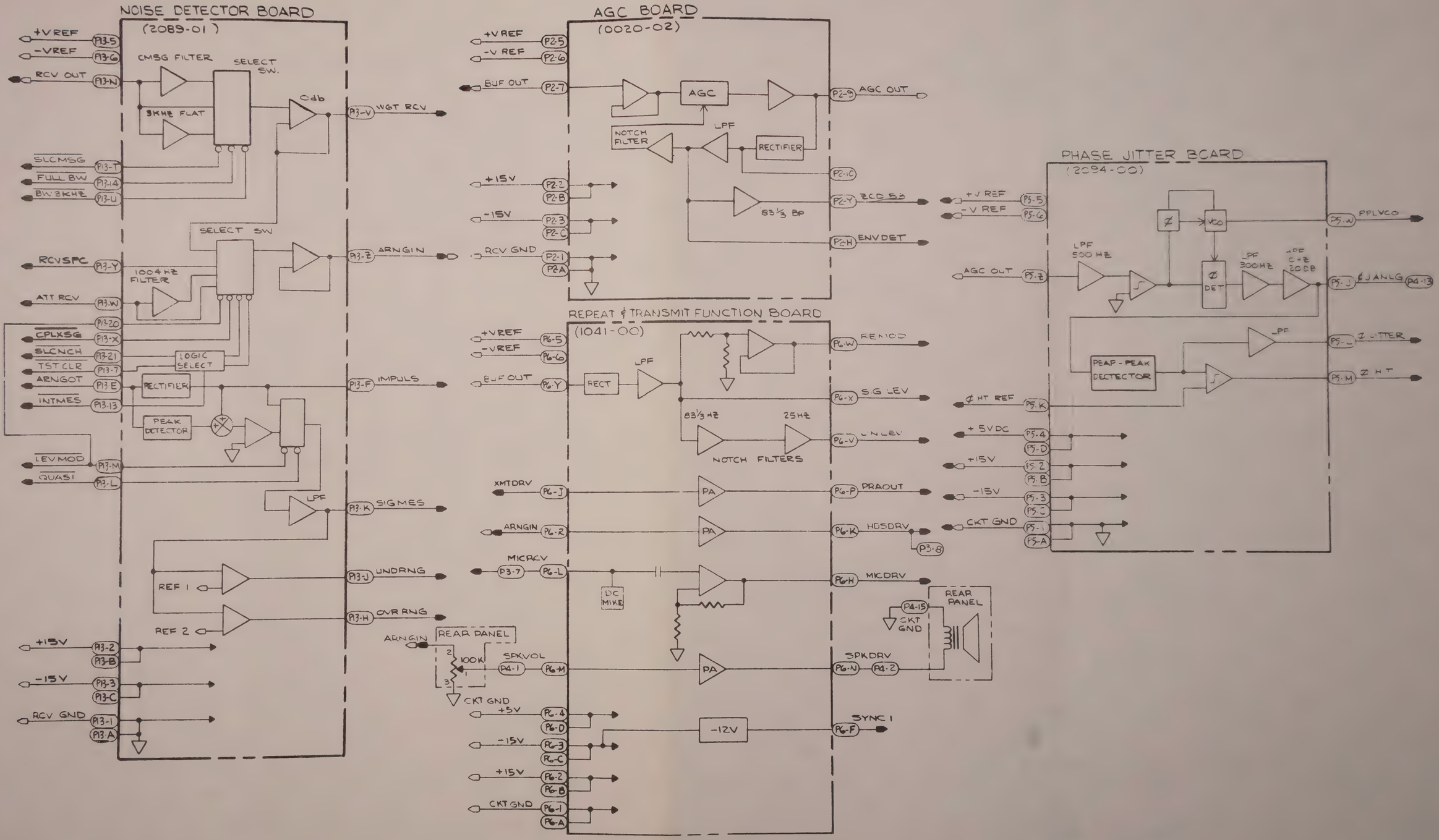

Figure FO-1. Model 520B2 Plug-In Without P/AR (Part of 520B2-07), Overall Diagram (Sheet 2 of 8)

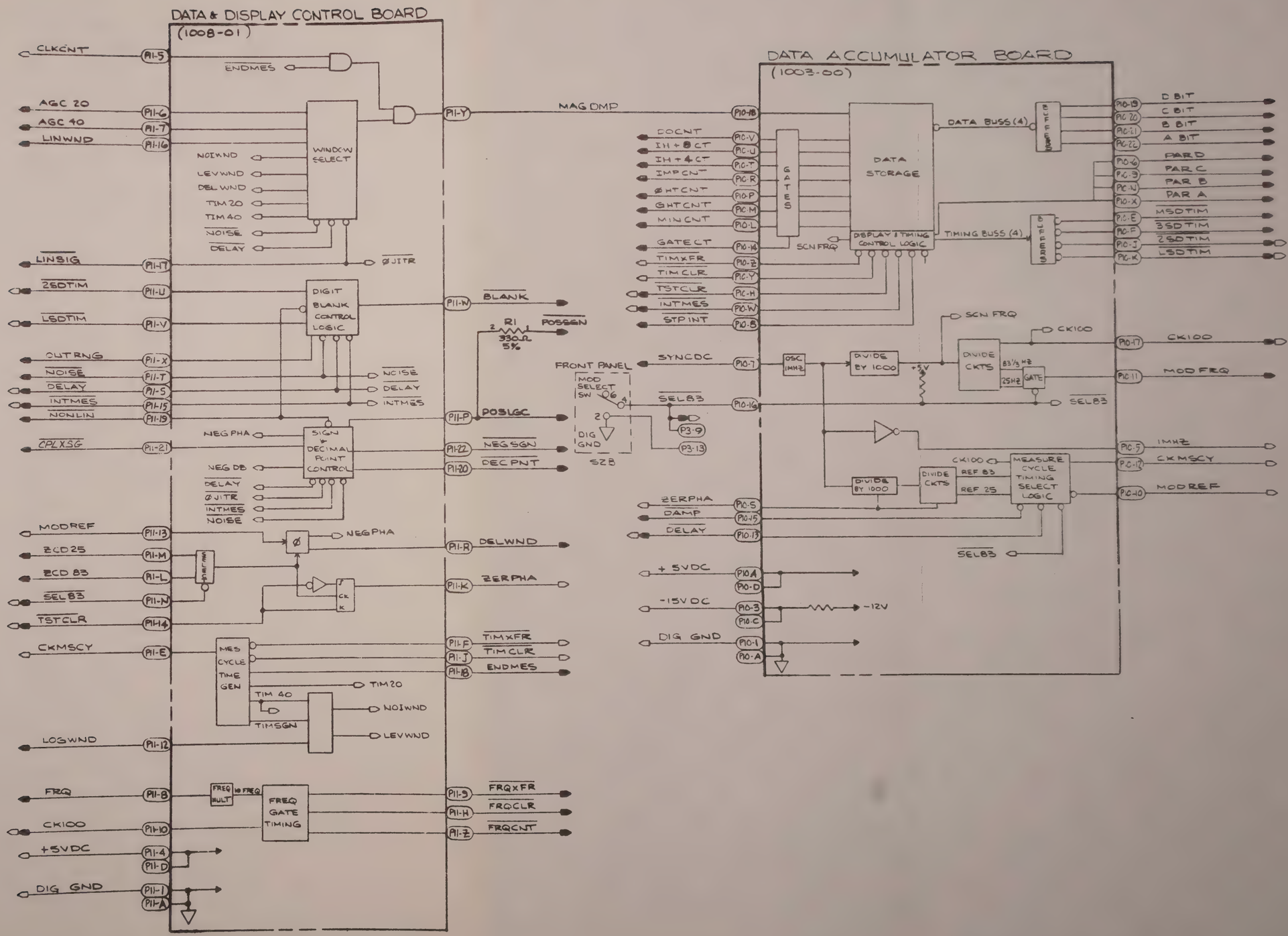

Figure FO-1. Model 520B2 Plug-In Without P/AR (Part of 520B2-07), Overall Diagram (Sheet 3 of 8)

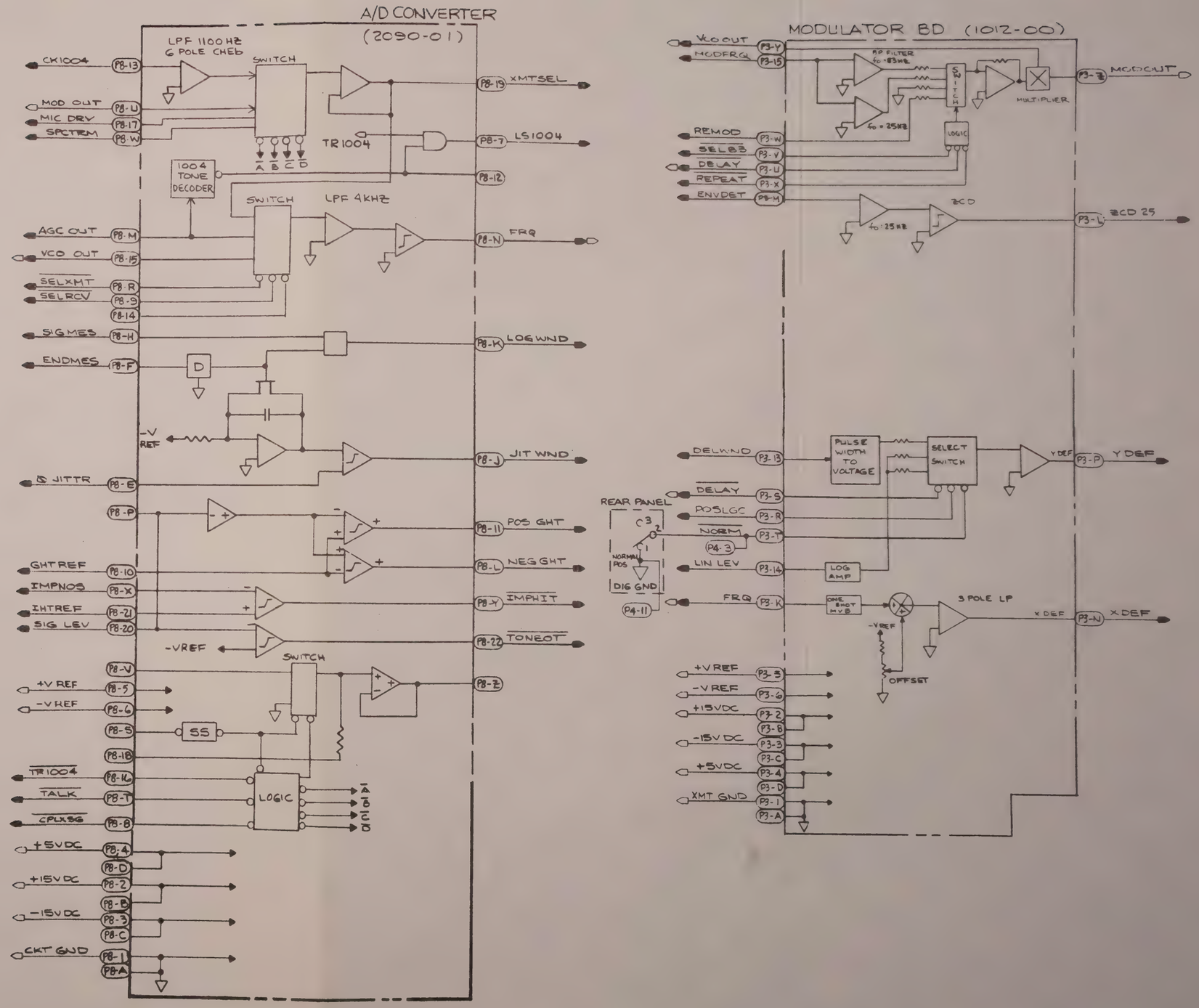

Figure FO-1. Model 520B2 Plug-In Without P/AR (Part of 520B2-07), Overall Diagram (Sheet 4 of 8)

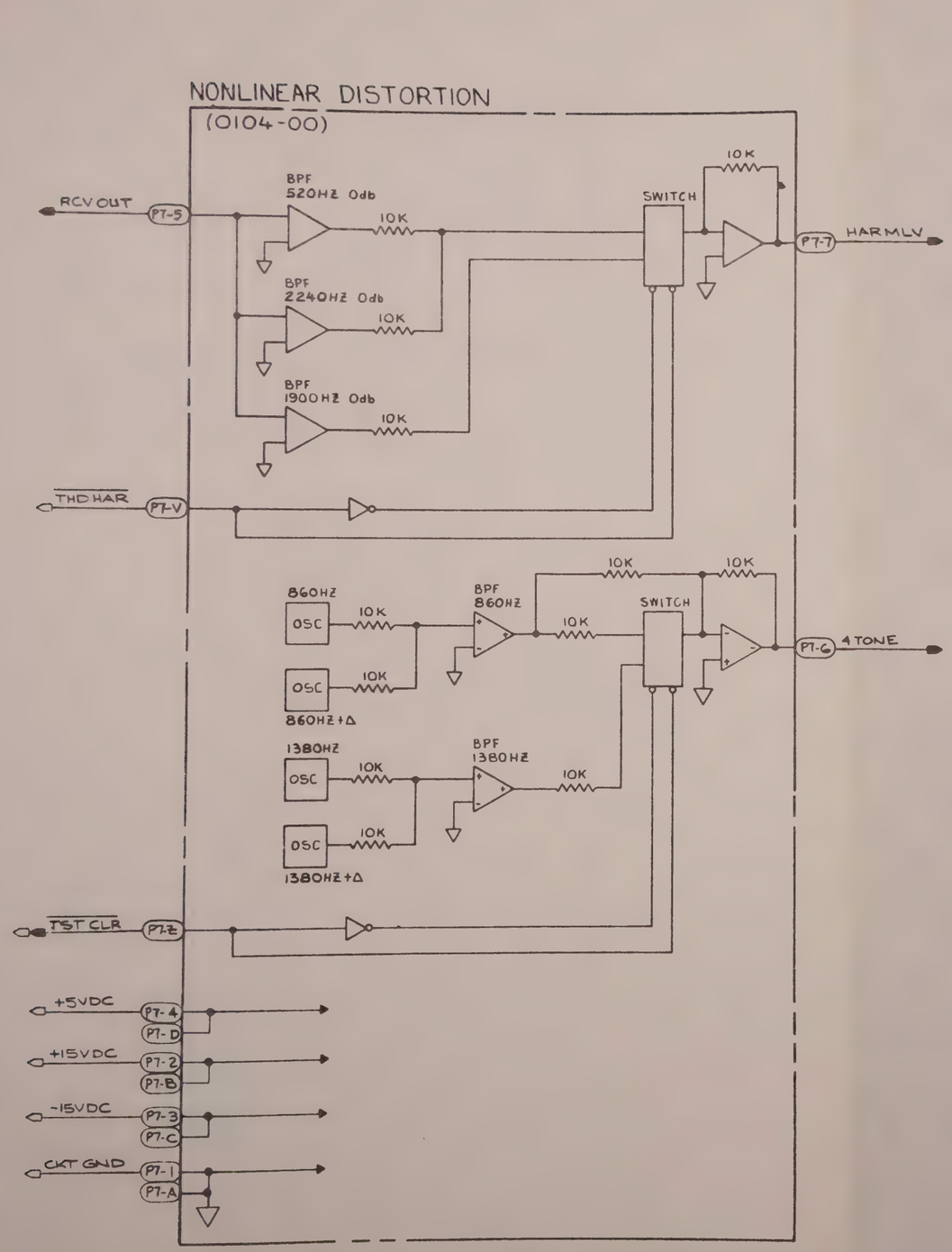

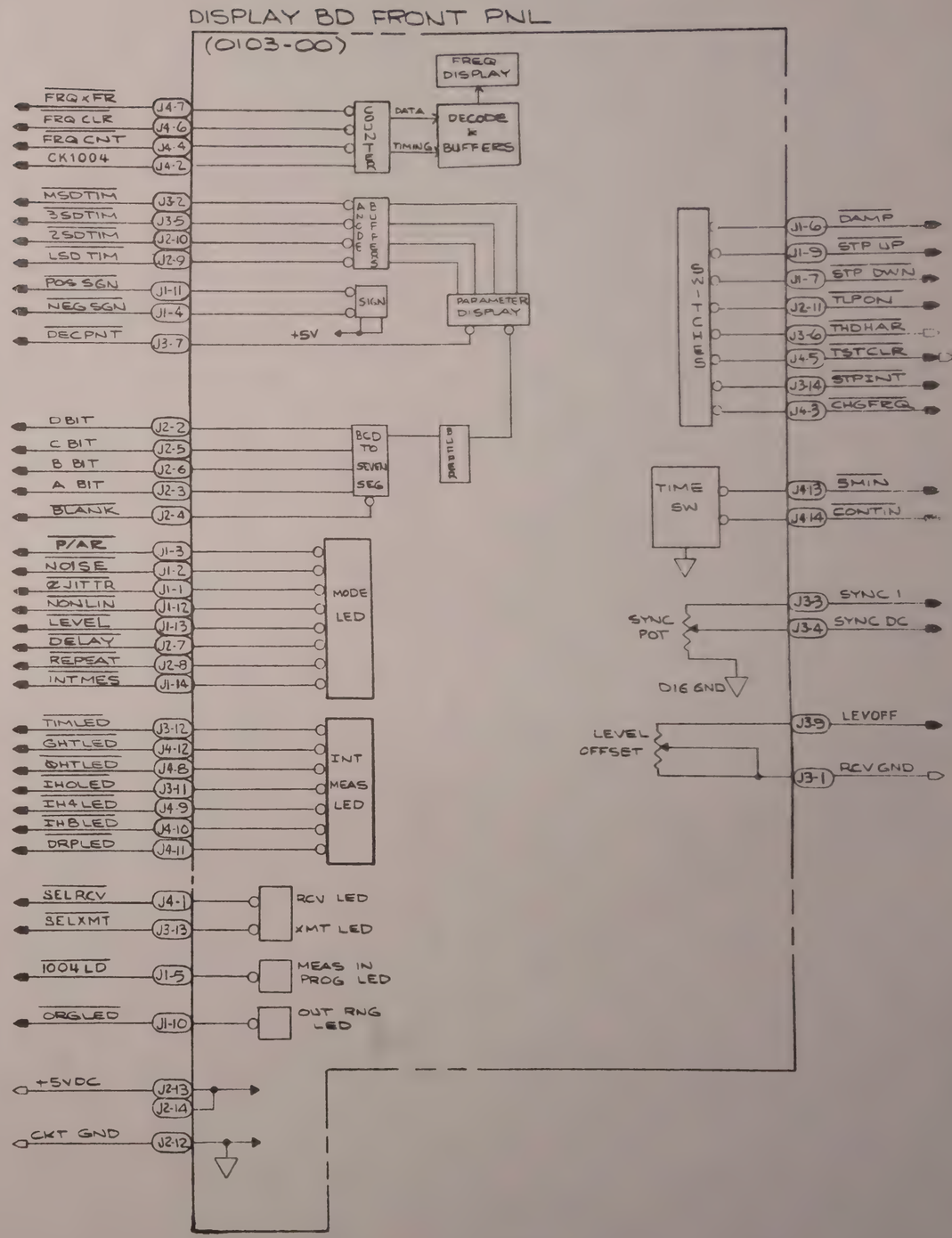

Figure FO-1. Model 520B2 Plug-In Without P/AR (Part of 520B2-07), Overall Diagram (Sheet 5 of 8)

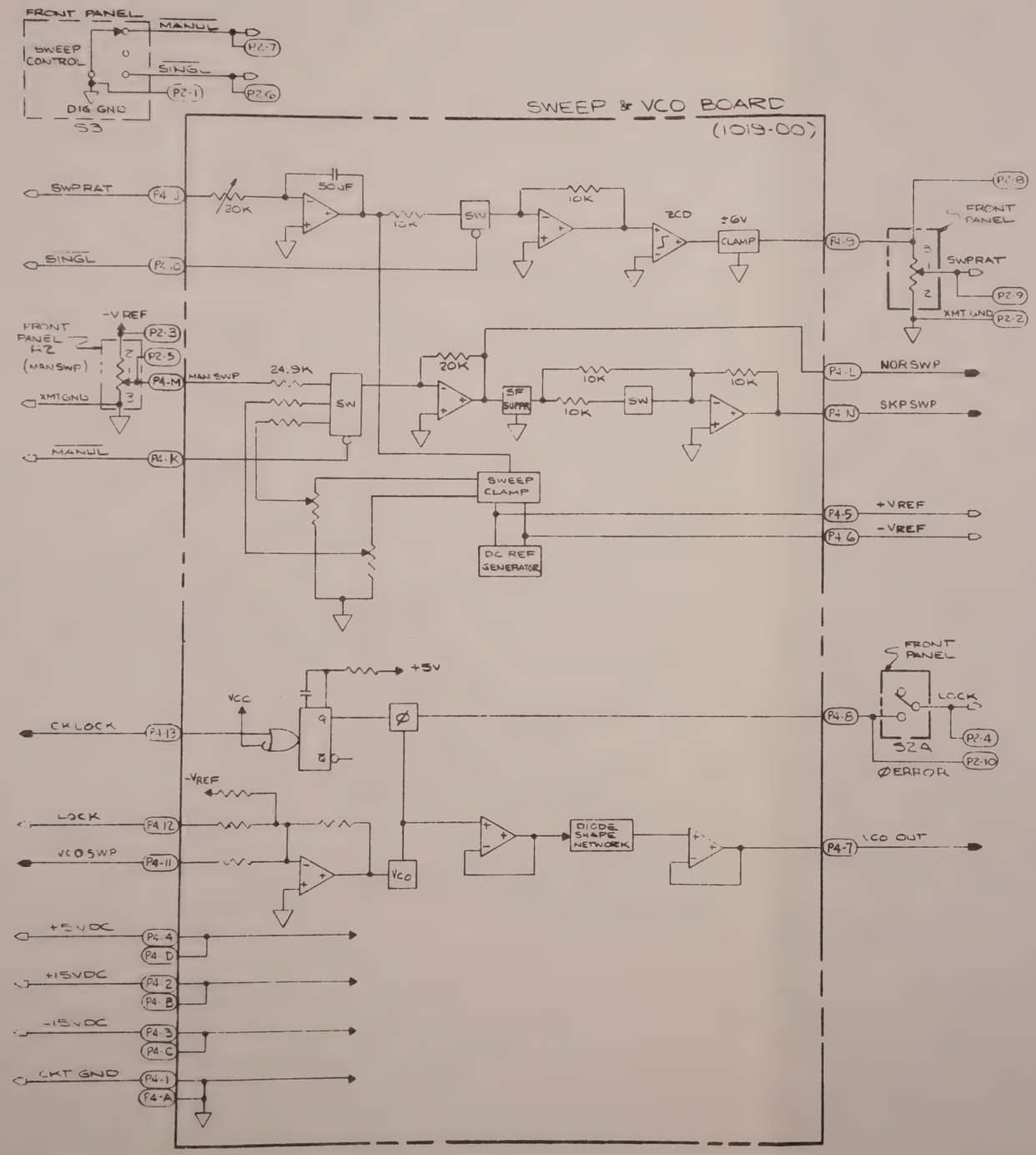

Figure FO-1. Model 520B2 Plug-In Without P/AR (Part of 520B2-07), Overall Diagram (Sheet 6 of 8)

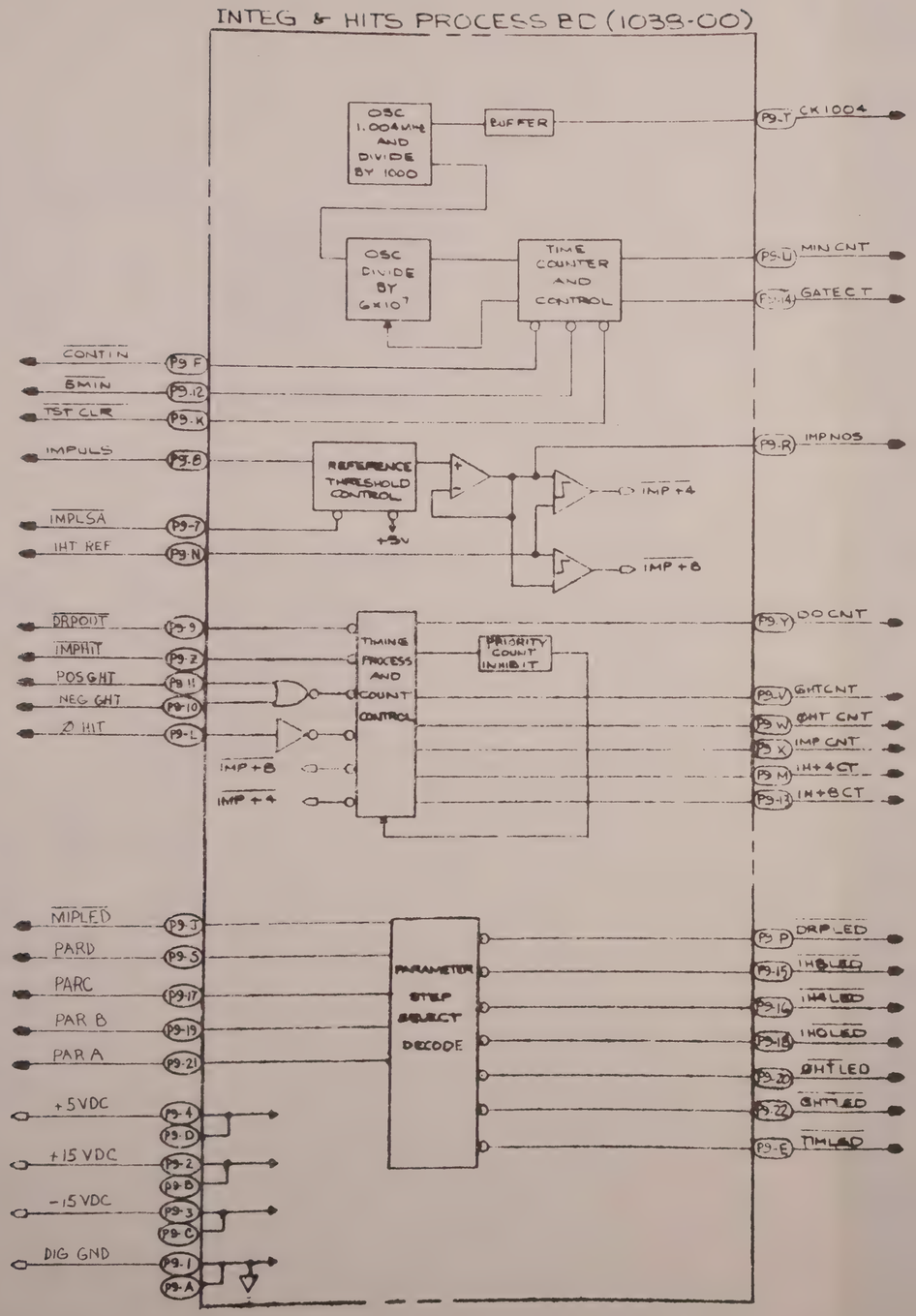

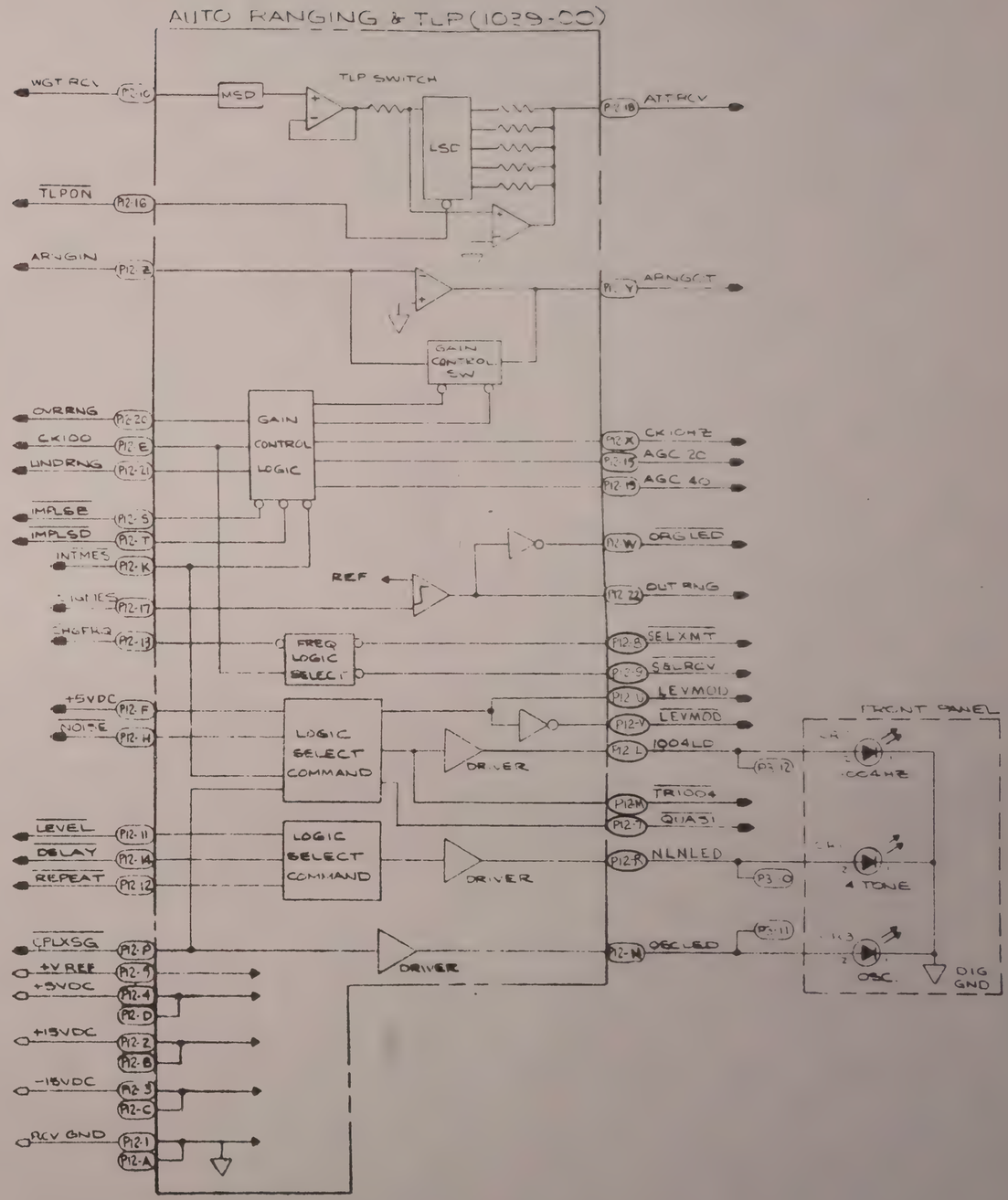

Figure FO-1. Model 520B2 Plug-In Without P/AR (Part of 520B2-07), Overall Diagram (Sheet 7 of 8)

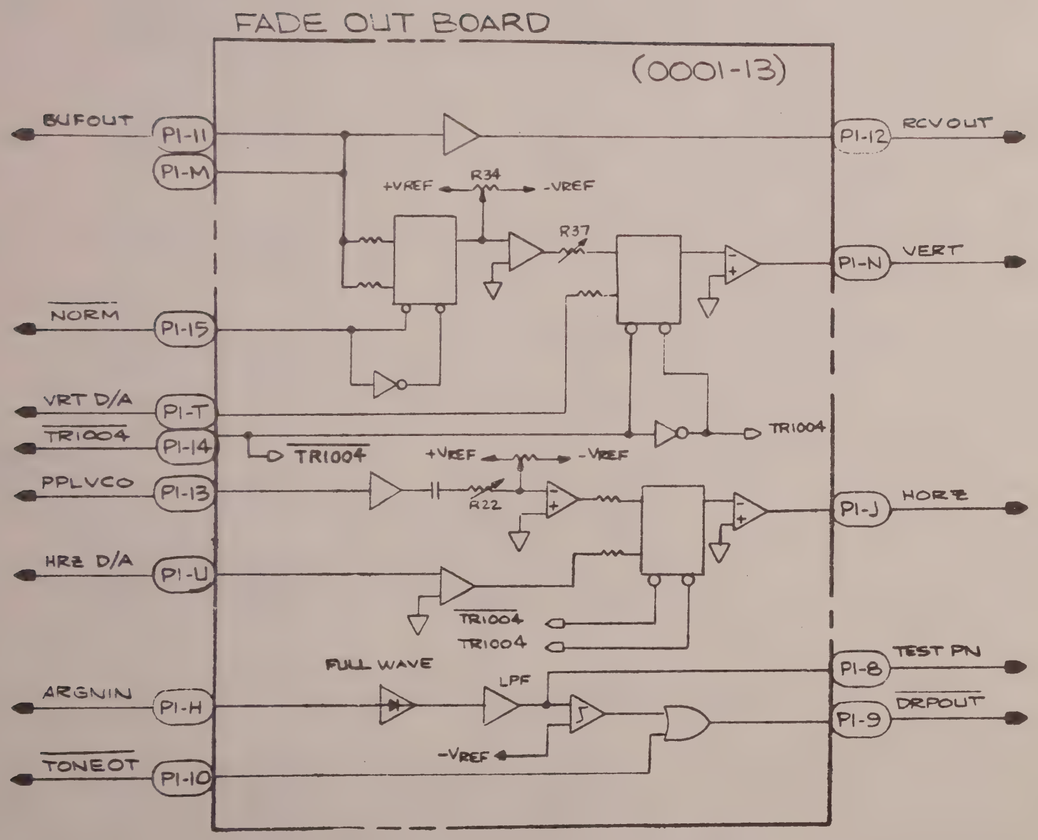

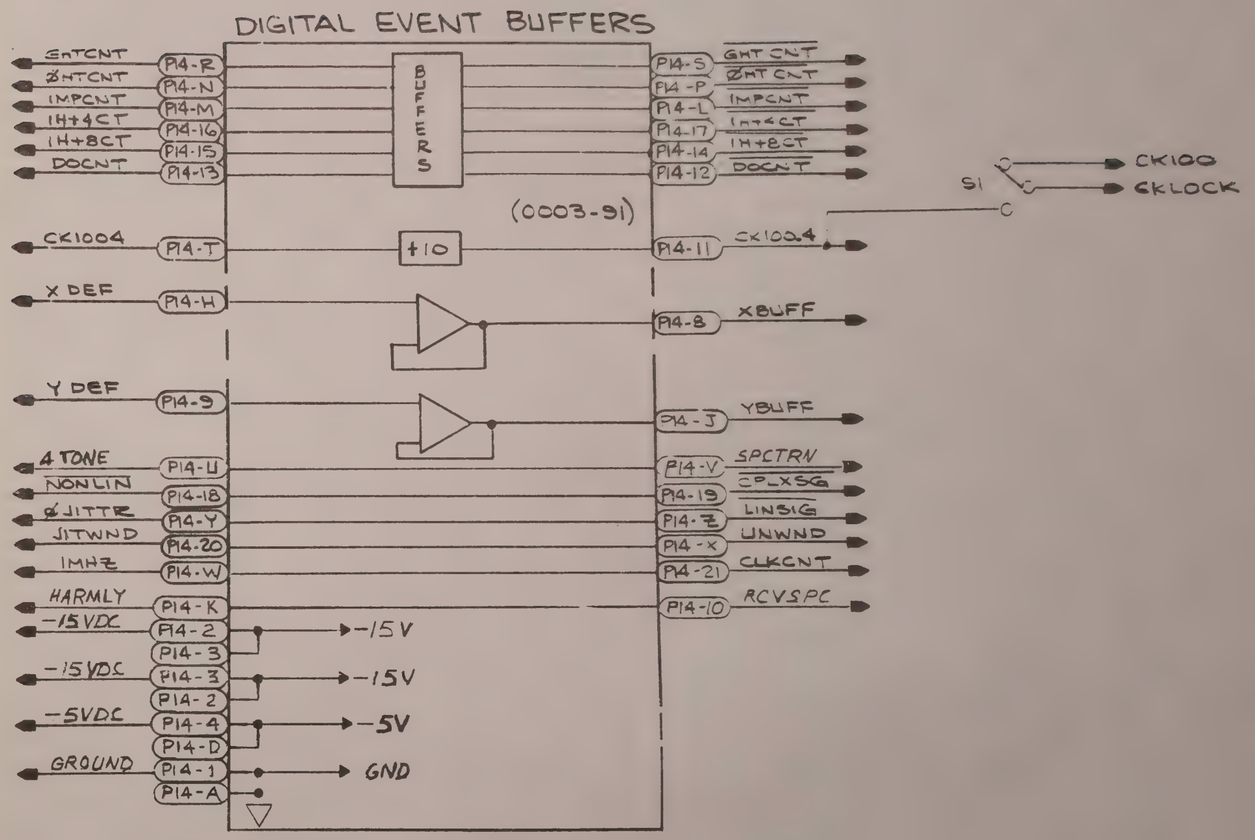

Figure FO-1. Model 520B2 Plug-In Without P/AR (Part of 520B2-07), Overall Diagram (Sheet 8 of 8)

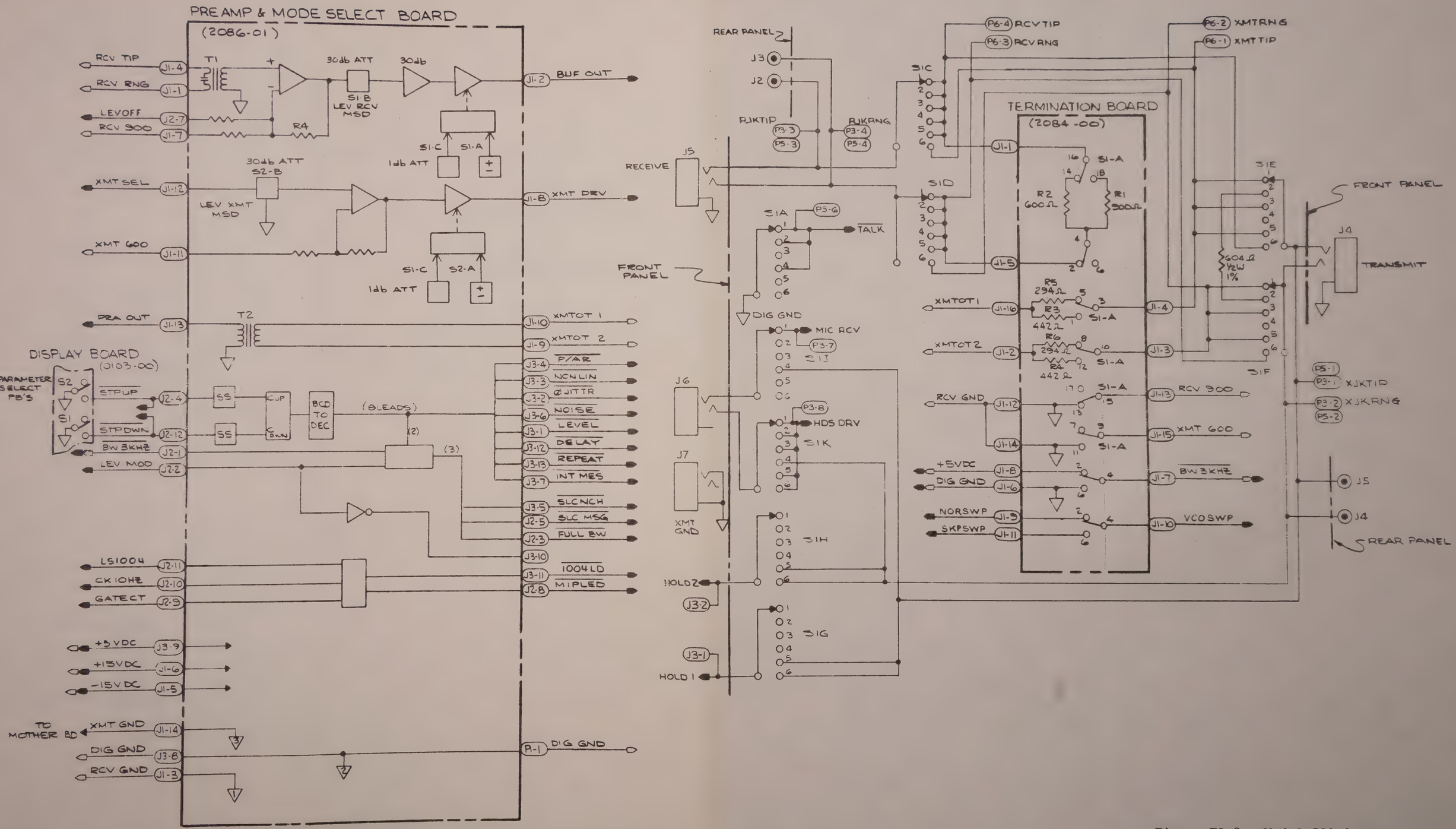

Figure FO-2. Model 520B2 Plug-In With P/AR (Part of 520B2-17), Overall Diagram (Sheet 1 of 8)

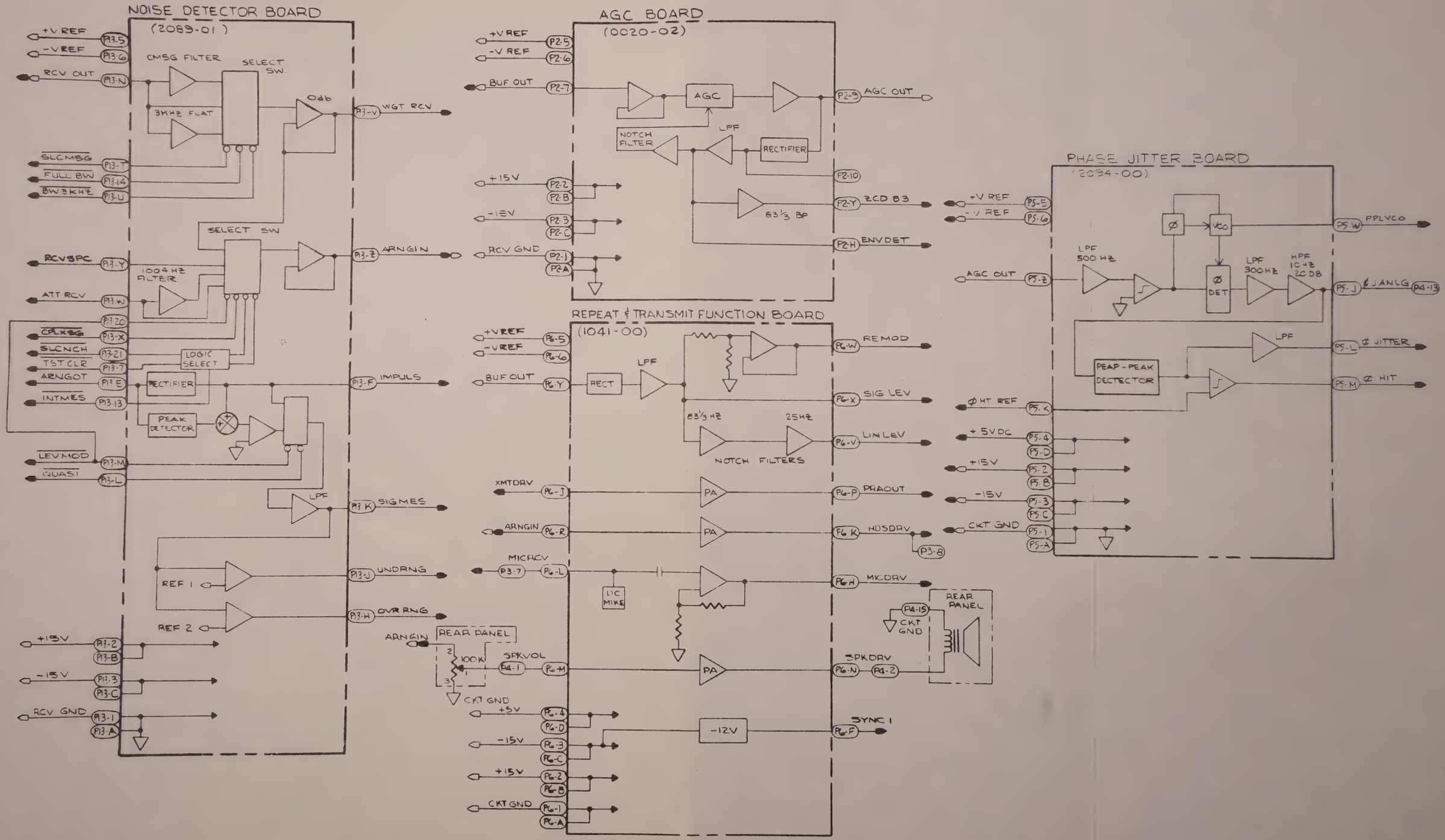

Figure FO-2. Model 520B2 Plug-In With P/AR (Part of 520B2-17), Overall Diagram (Sheet 2 of 8)

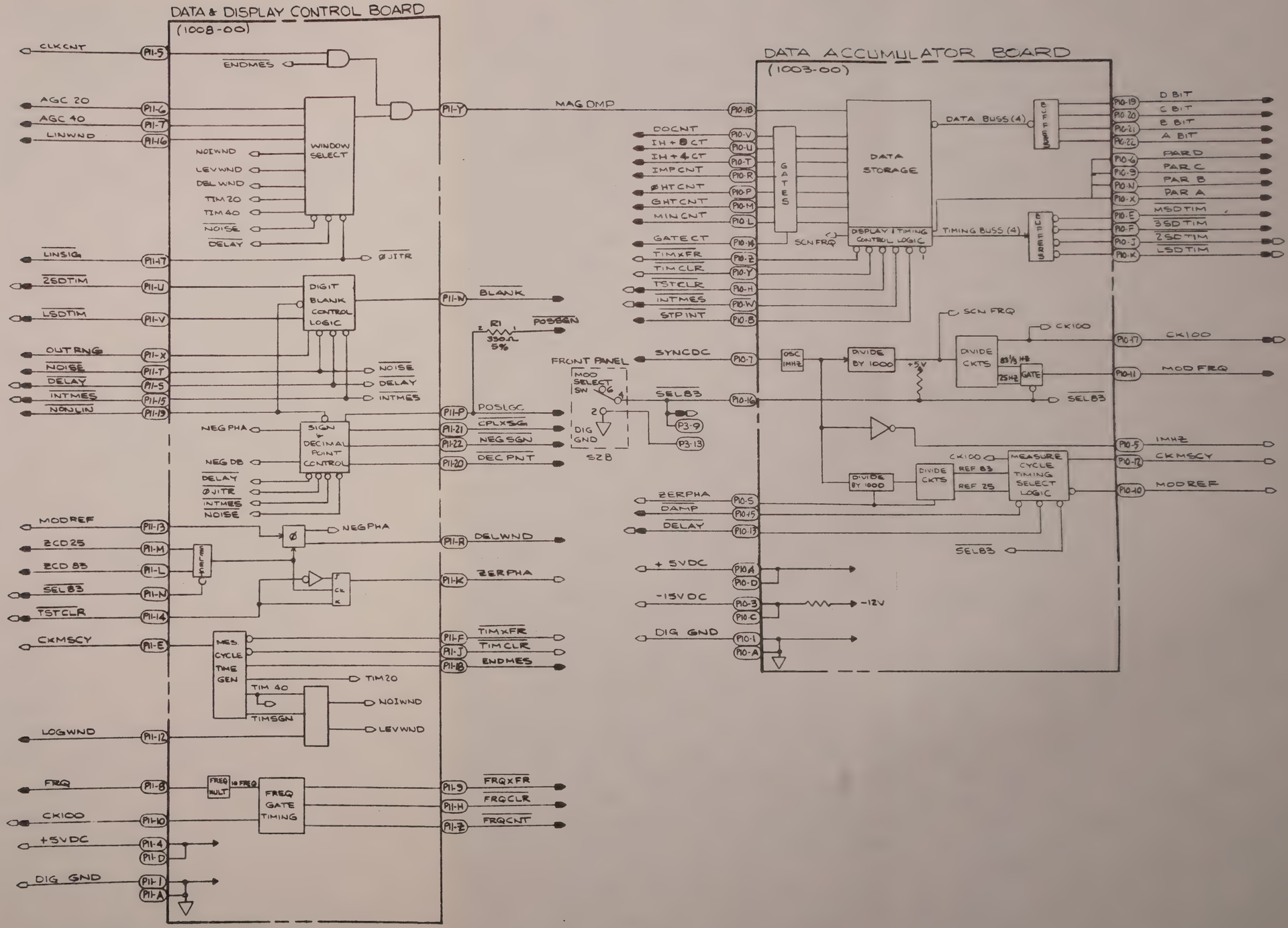

Figure FO-2. Model 520B2 Plug-In With P/AR (Part of 520B2-17), Overall Diagram (Sheet 3 of 8)

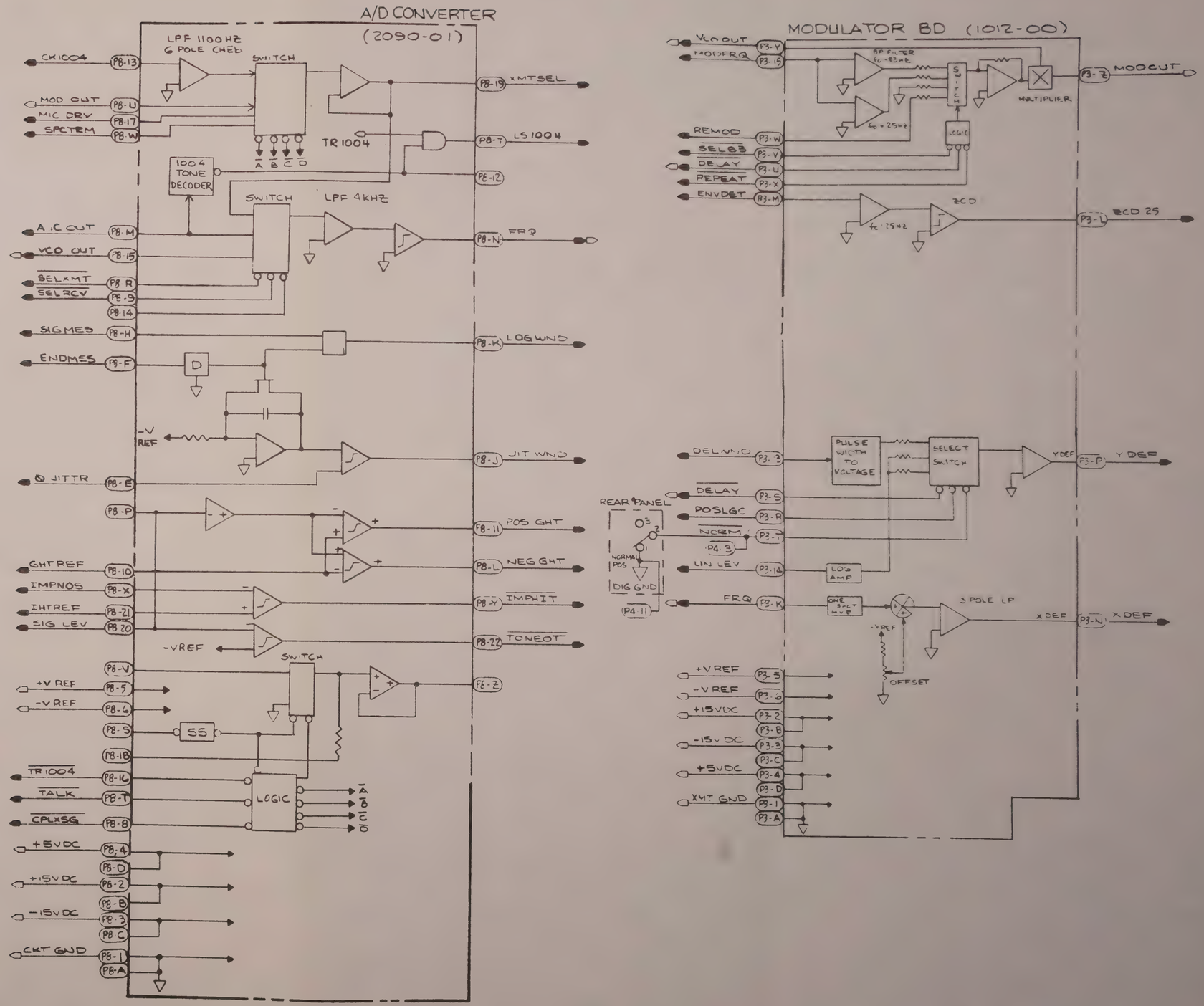

Figure FO-2. Model 520B2 Plug-In With P/AR (Part of 520B2-17), Overall Diagram (Sheet 4 of 8)

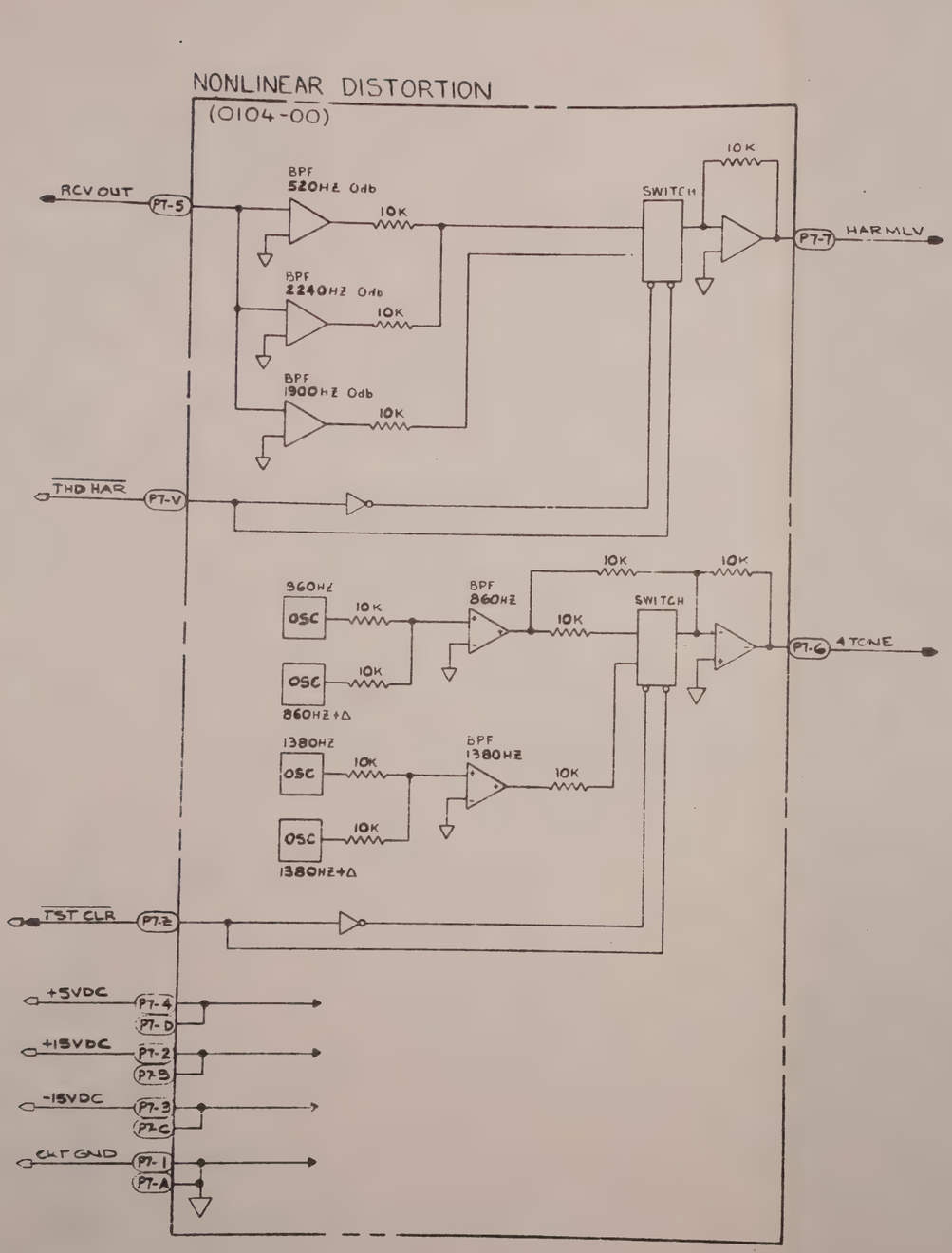

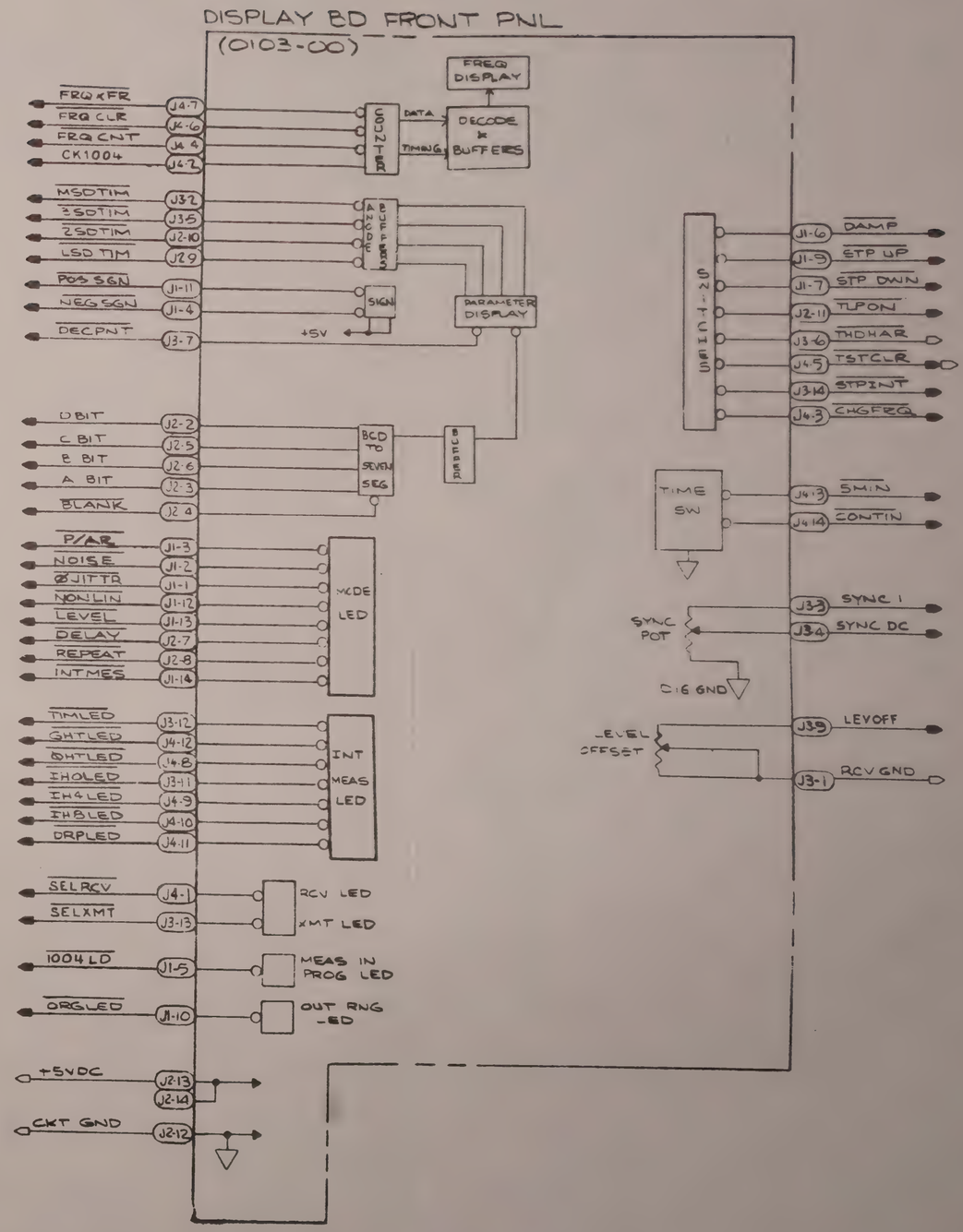

Figure FO-2. Model 520B2 Plug-In With P/AR (Part of 520B2-17), Overall Diagram (Sheet 5 of 8)

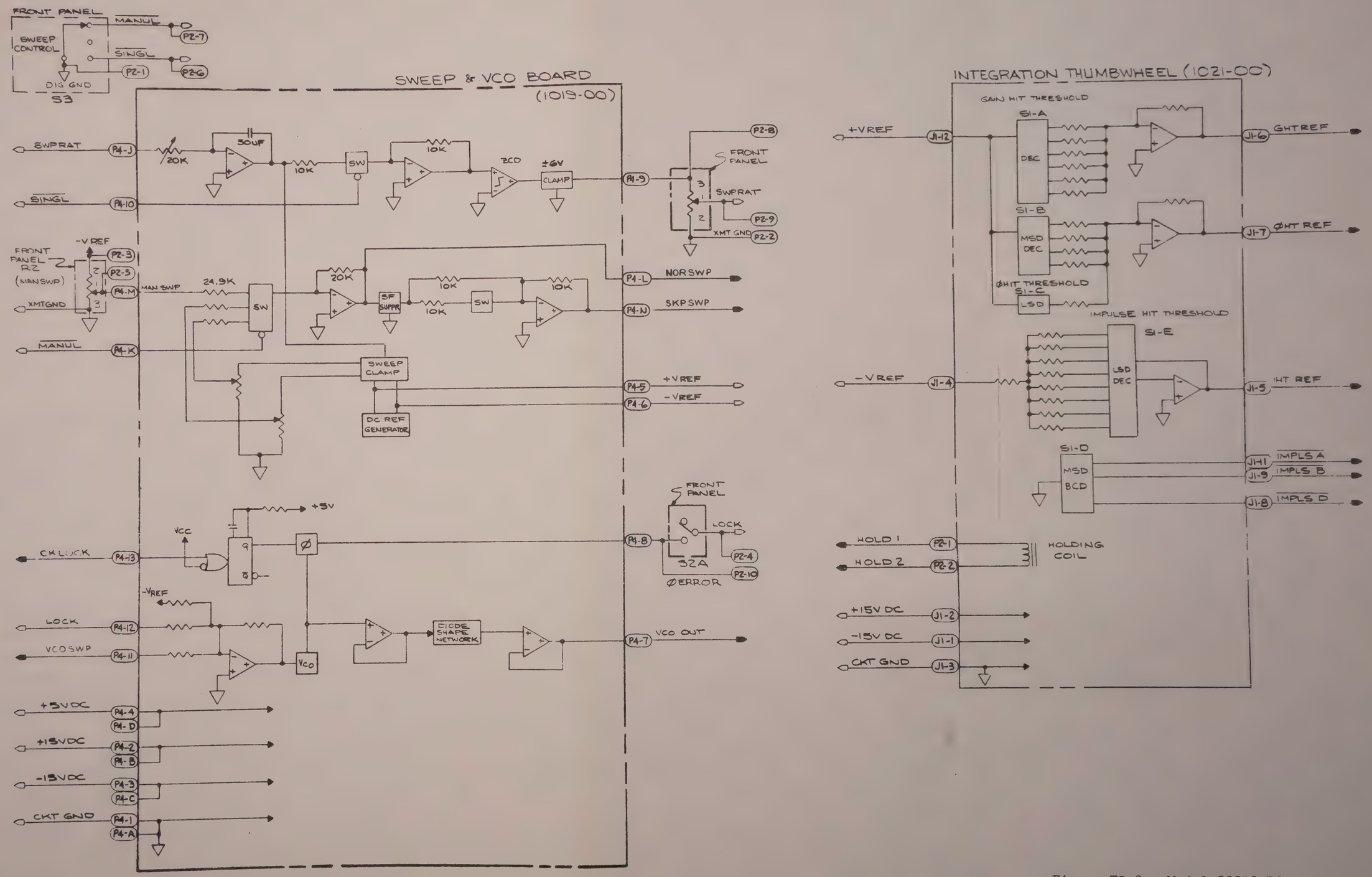

Figure FO-2. Model 520B2 Plug-In With P/AR (Part of 520B2-17), Overall Diagram (Sheet 6 of 8)

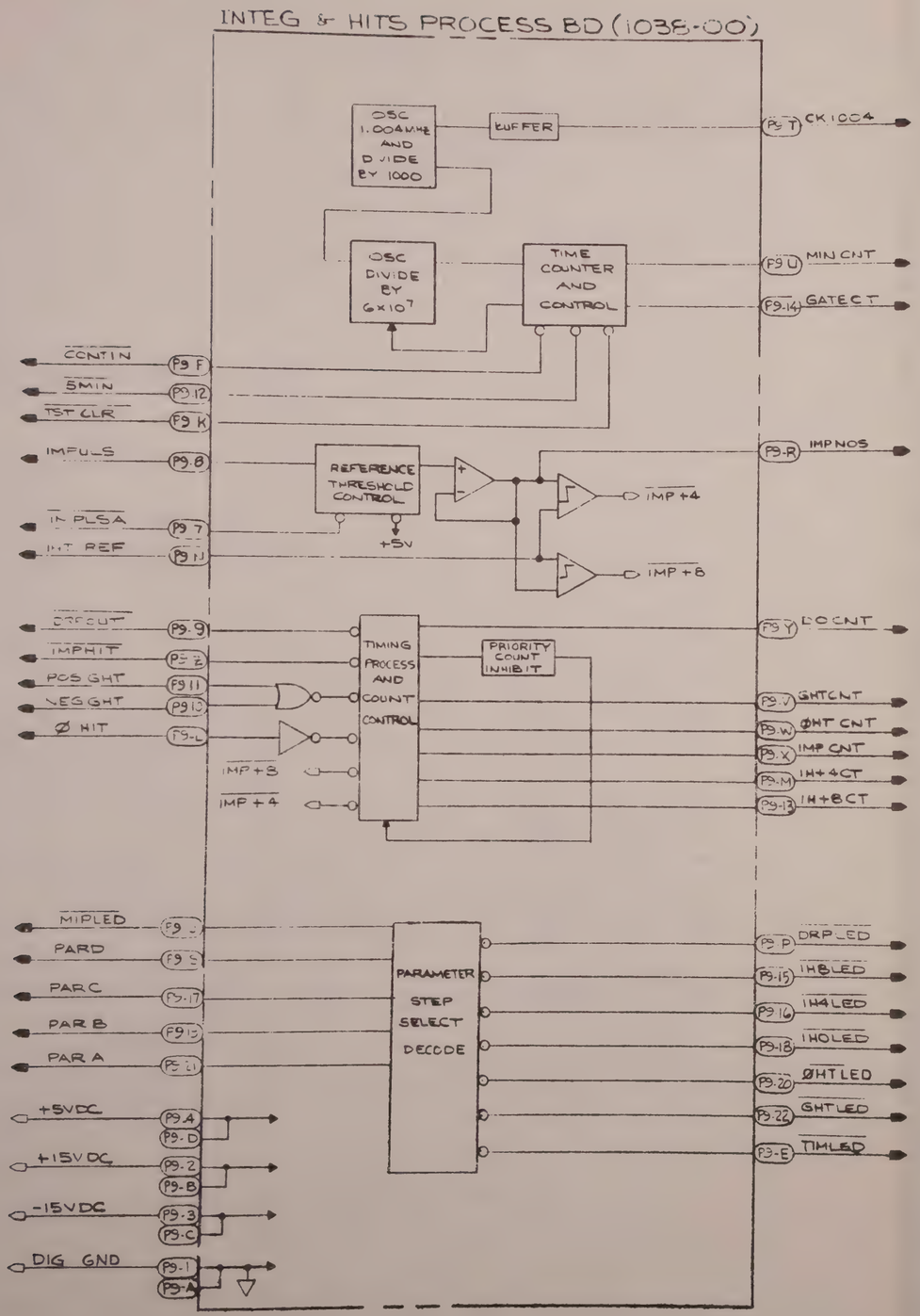

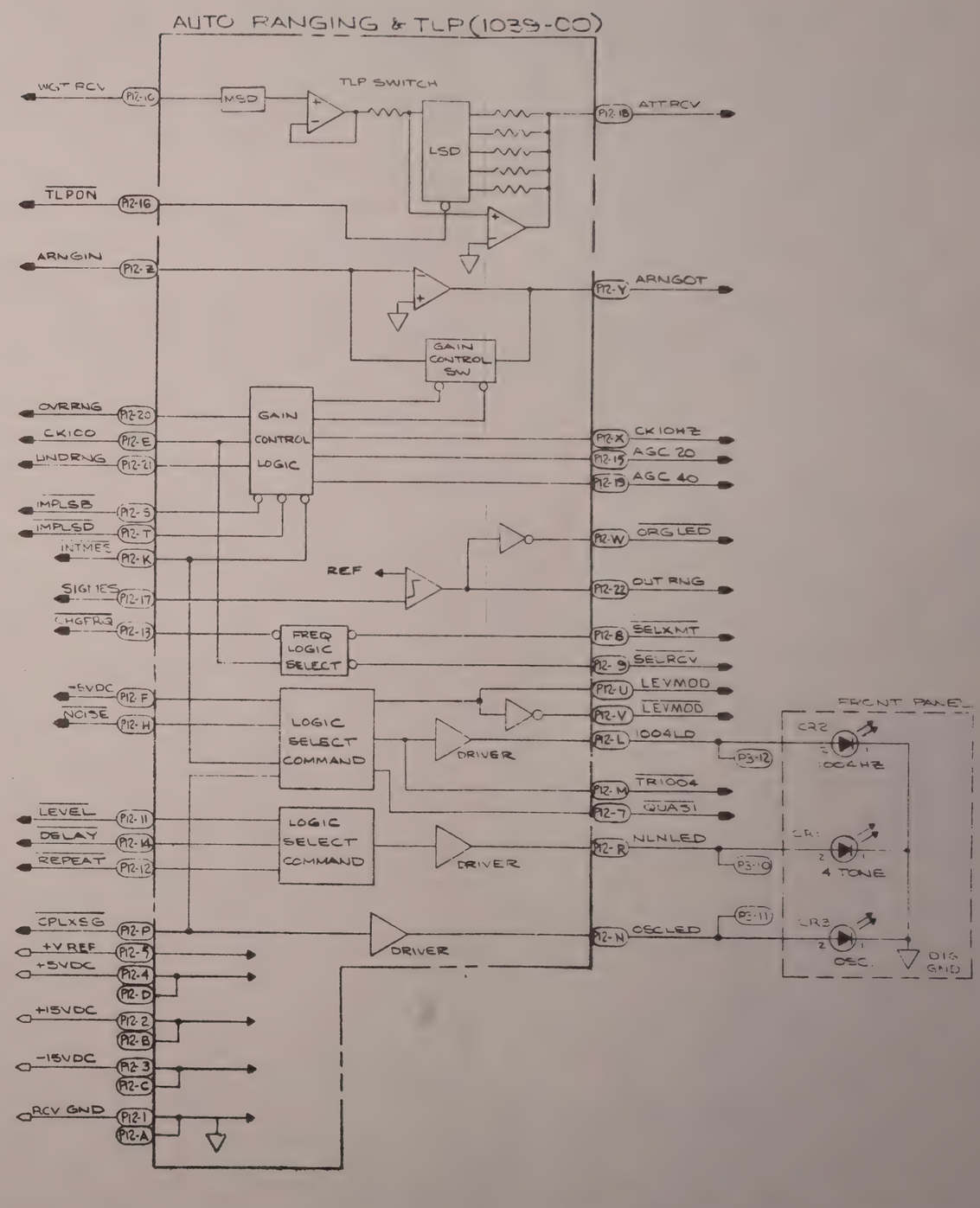

Figure FO-2. Model 520B2 Plug-In With P/AR (Part of 520B2-17), Overall Diagram (Sheet 7 of 8)

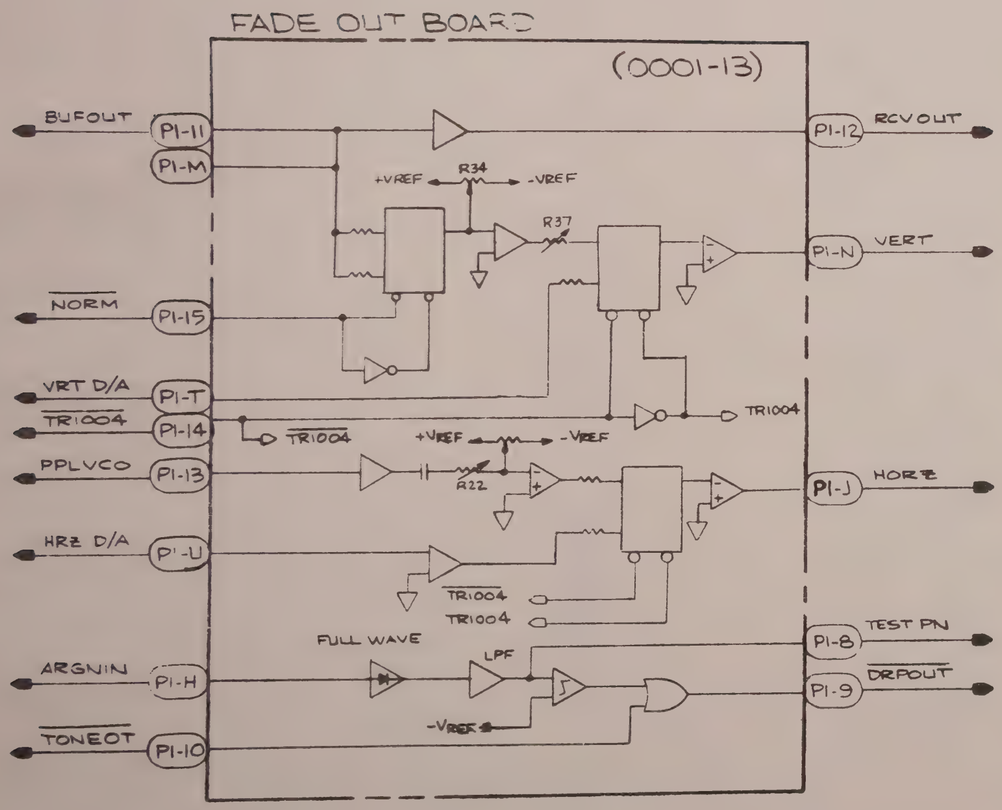

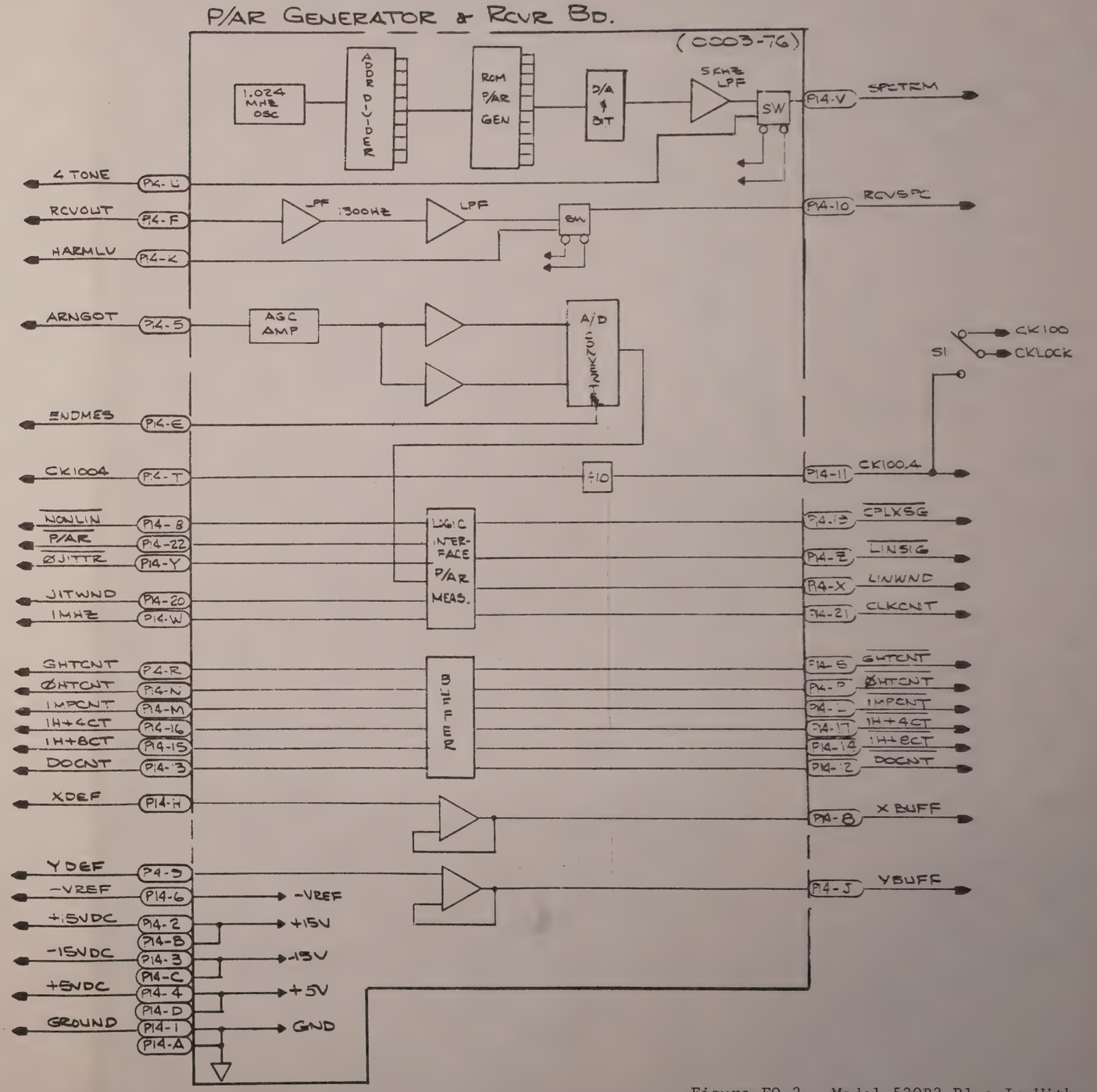

Figure FO-2. Model 520B2 Plug-In With P/AR (Part of 520B2-17), Overall Diagram (Sheet 8 of 8)

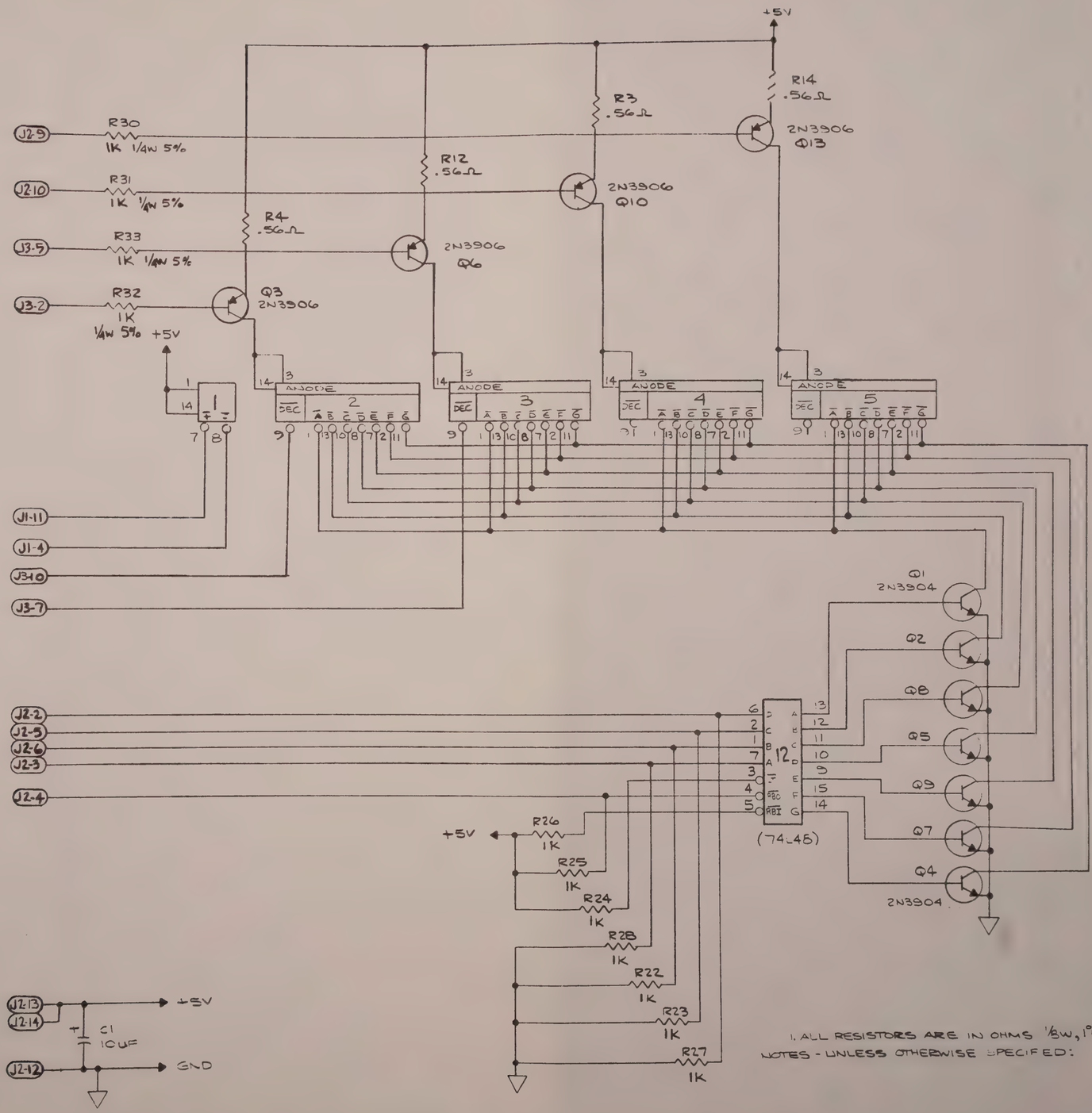

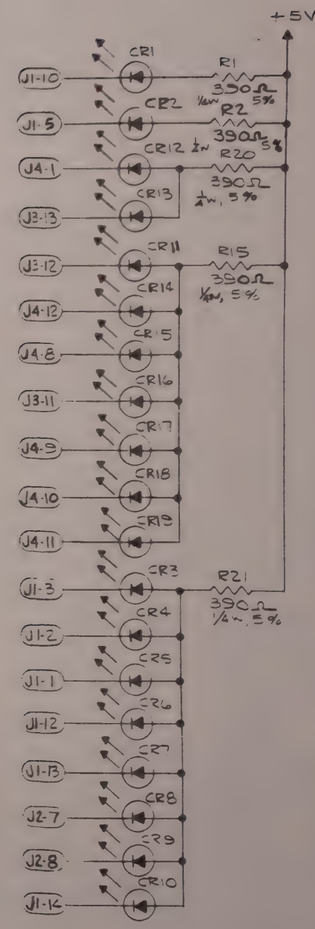

Figure FO-3. Front Panel Display Circuit Card 1A1A1A1, Schematic Diagram (Sheet 1 of 2)

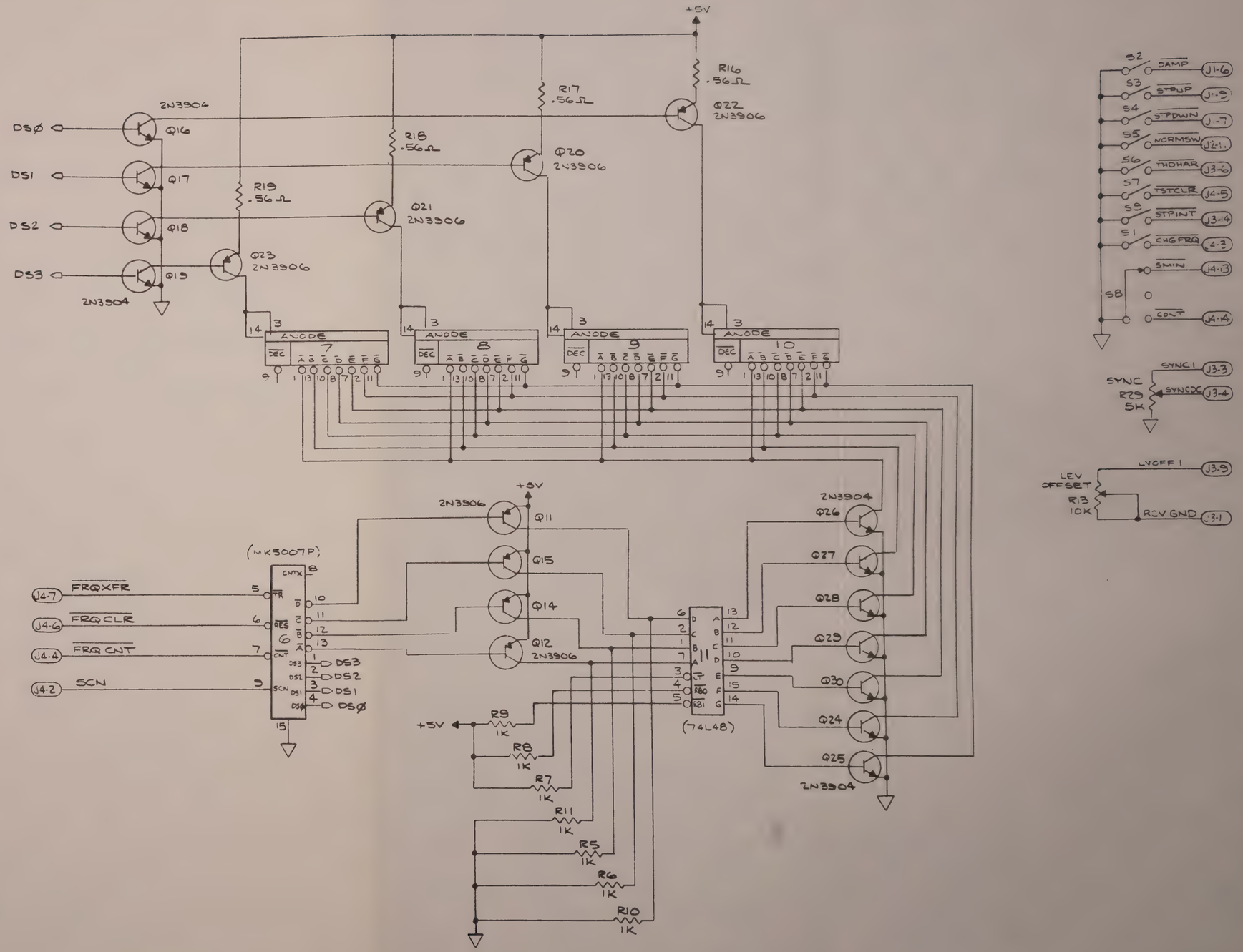

Figure FO-3. Front Panel Display Circuit Card 1A1A1A1, Schematic Diagram (Sheet 2 of 2)

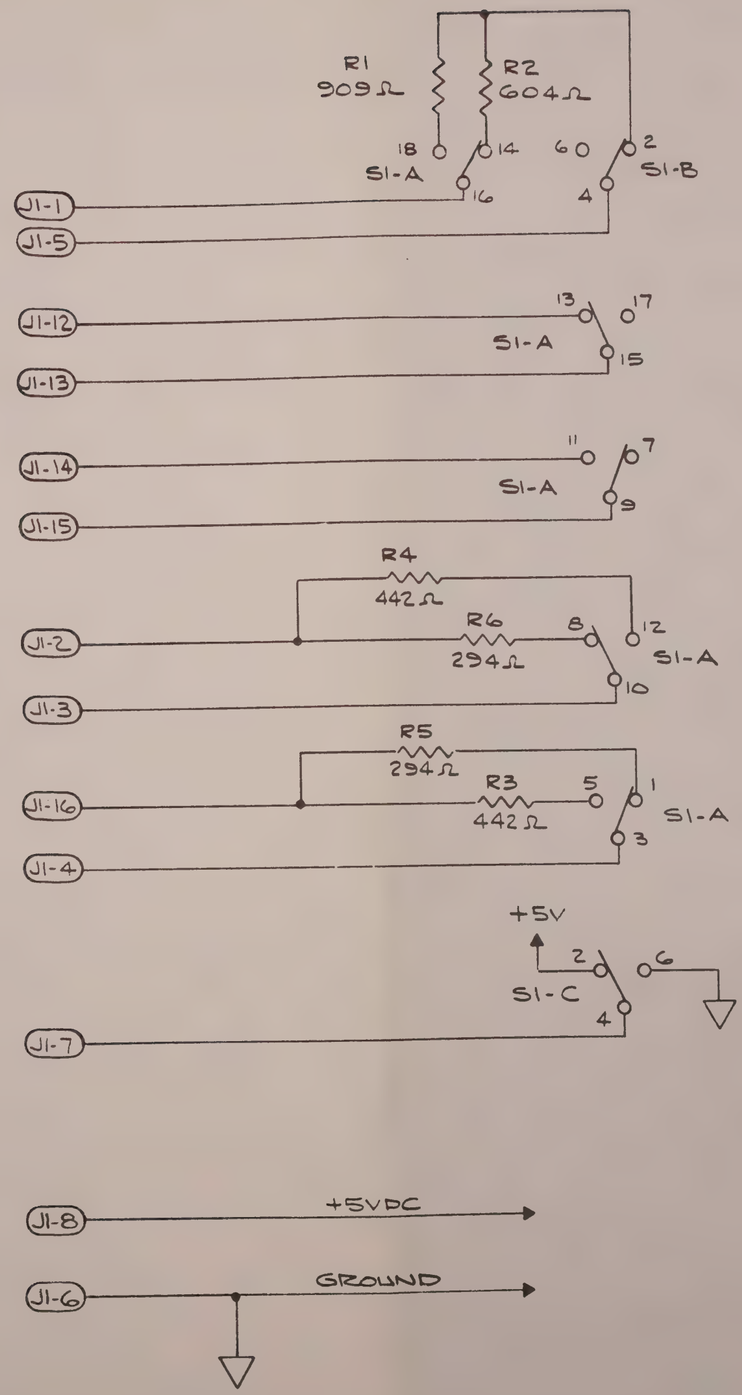

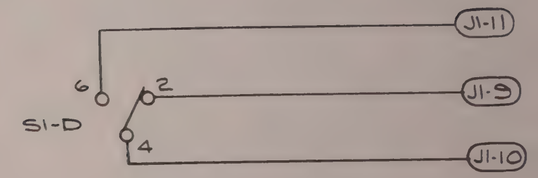

Figure FO-4. Termination Circuit Card 1A1A1A2, Schematic Diagram

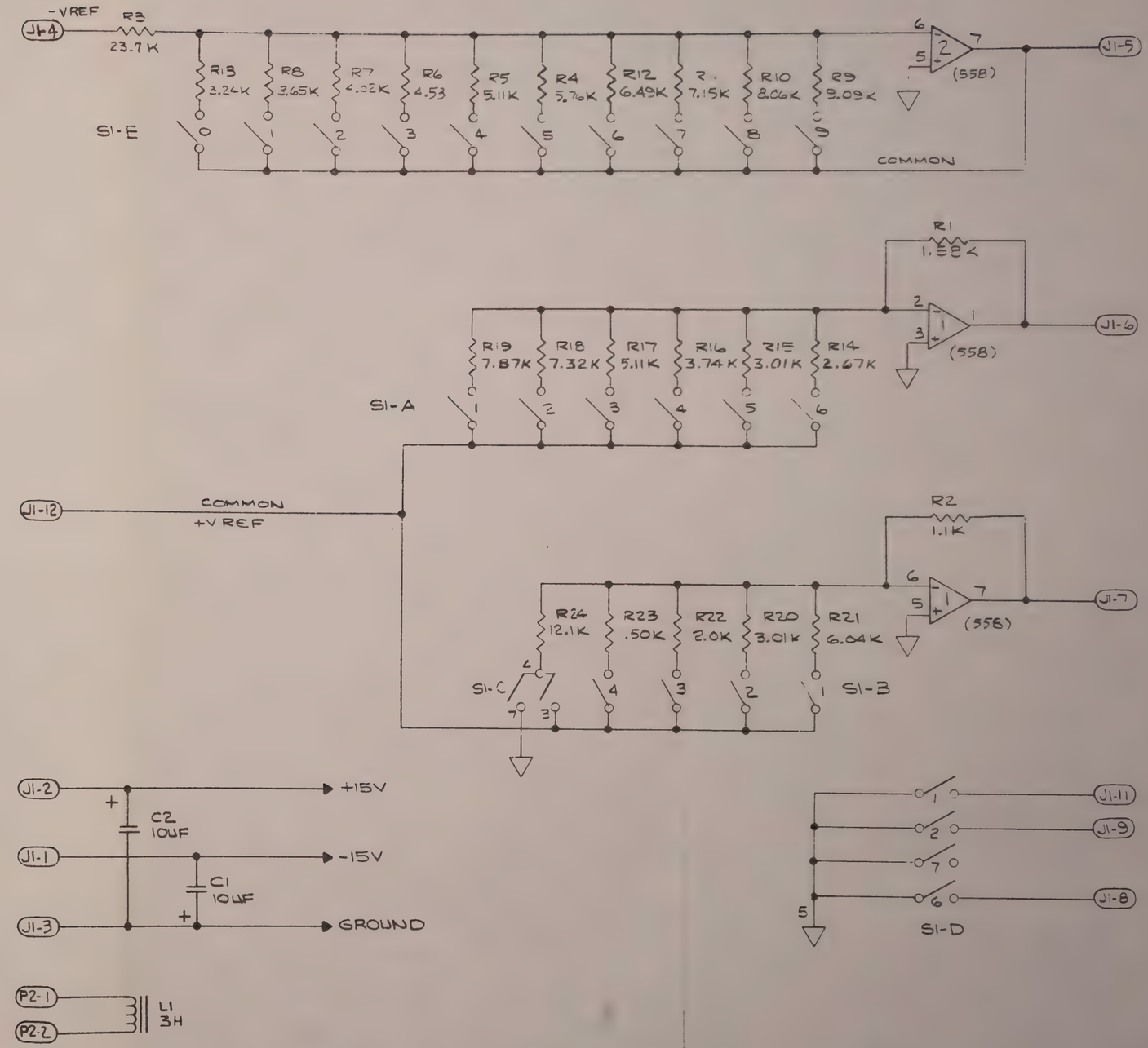

NOTES - UNLESS OTHERWISE SPECIFIED:

1. ALL RESISTOR ARE IN OHMS 1/8W, 1%

Figure FO-5. Integration Thumbwheel Circuit Card 1A1A1A3, Schematic Diagram

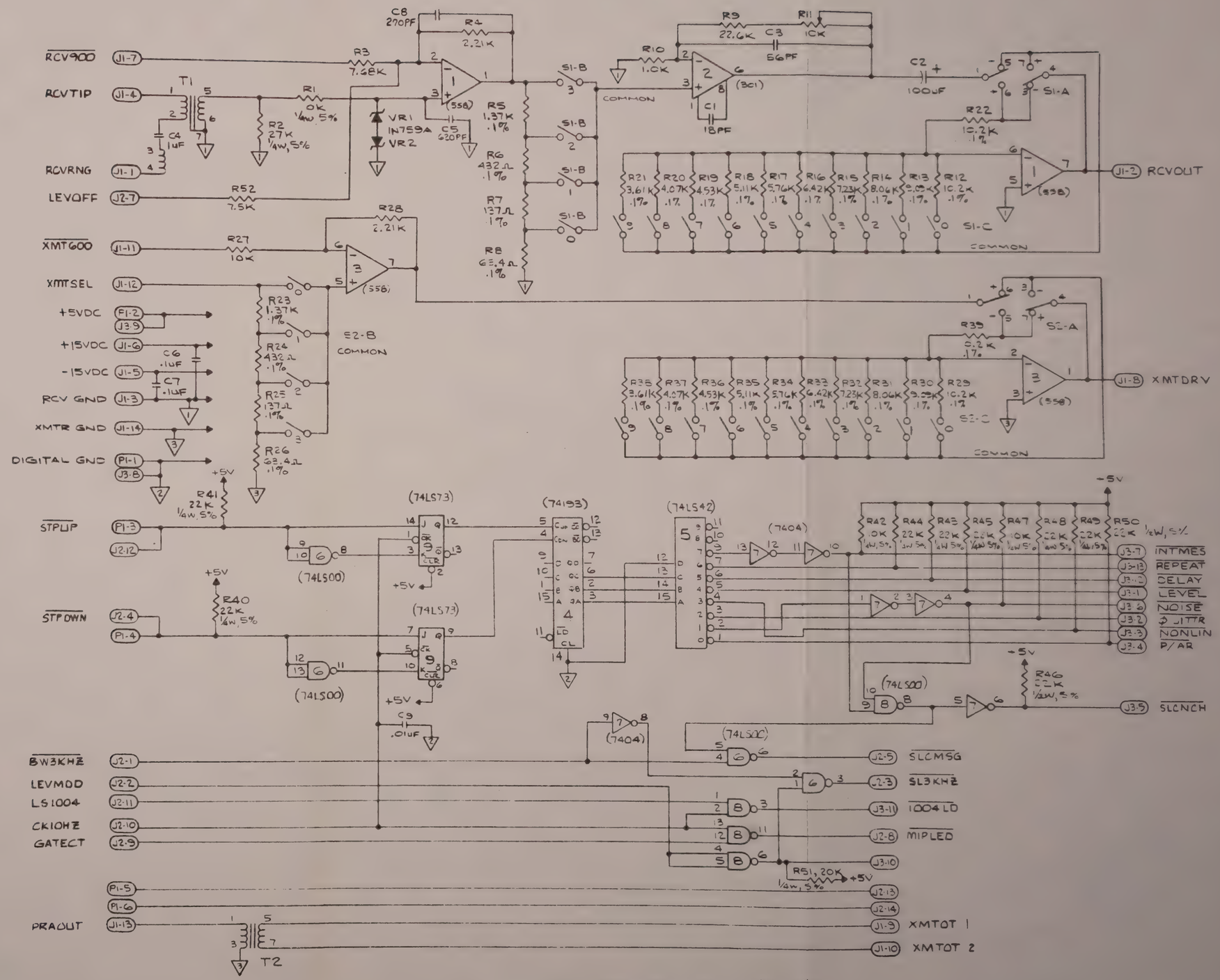

NOTES- UNLESS OTHERWISE SPECIFIED:

1. ALL RESISTORS ARE IN OHMS, 1/8W, 1%

Figure FO-6. Preamplifier and Mode Select Circuit Card 1A1A1A4, Schematic Diagram

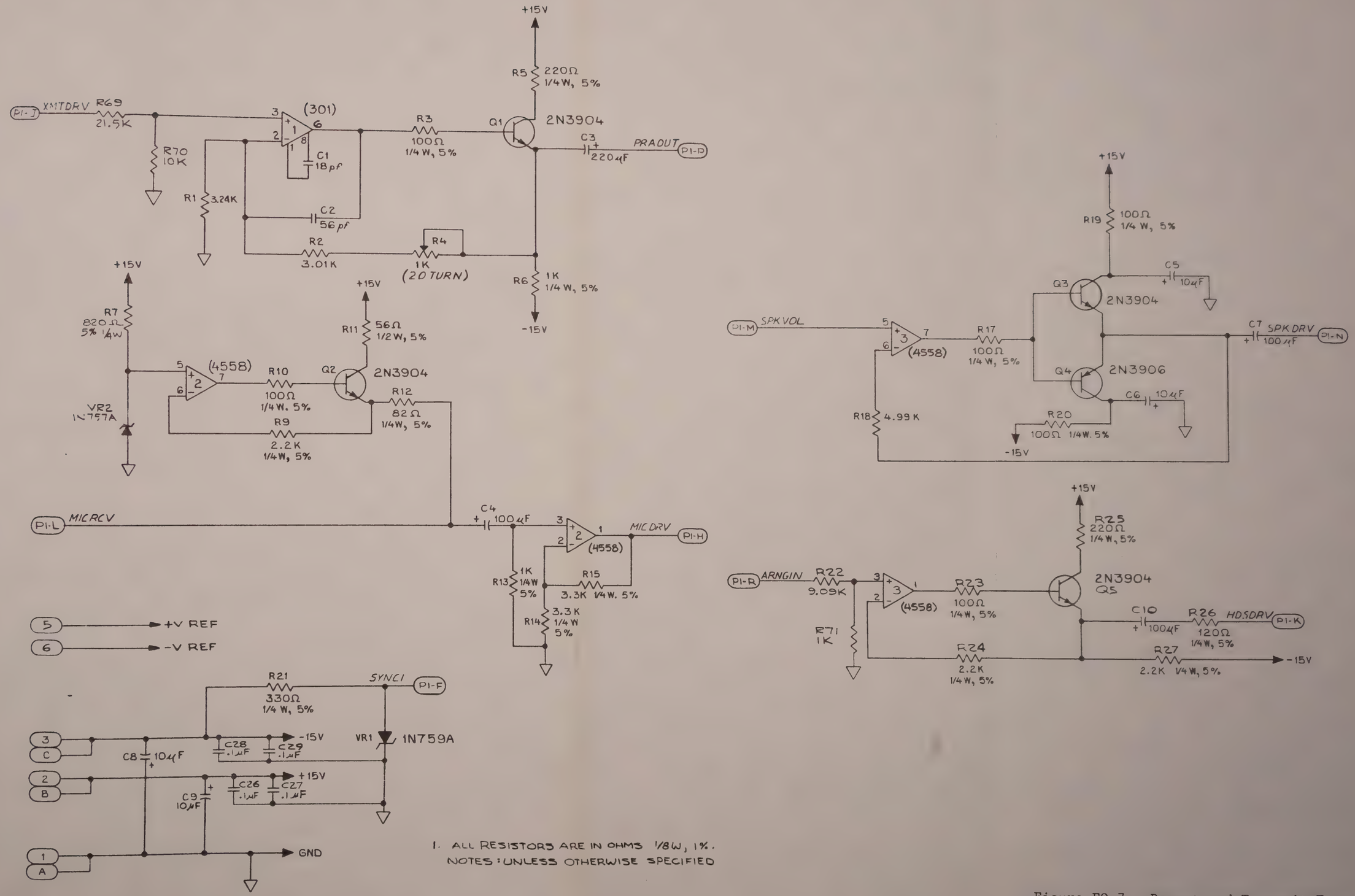

1. ALL RESISTORS ARE IN OHMS 1/8W, 1%.
NOTES: UNLESS OTHERWISE SPECIFIED

Figure FO-7. Repeat and Transmit Function Circuit Card 1A2, Schematic Diagram (Sheet 1 of 2)

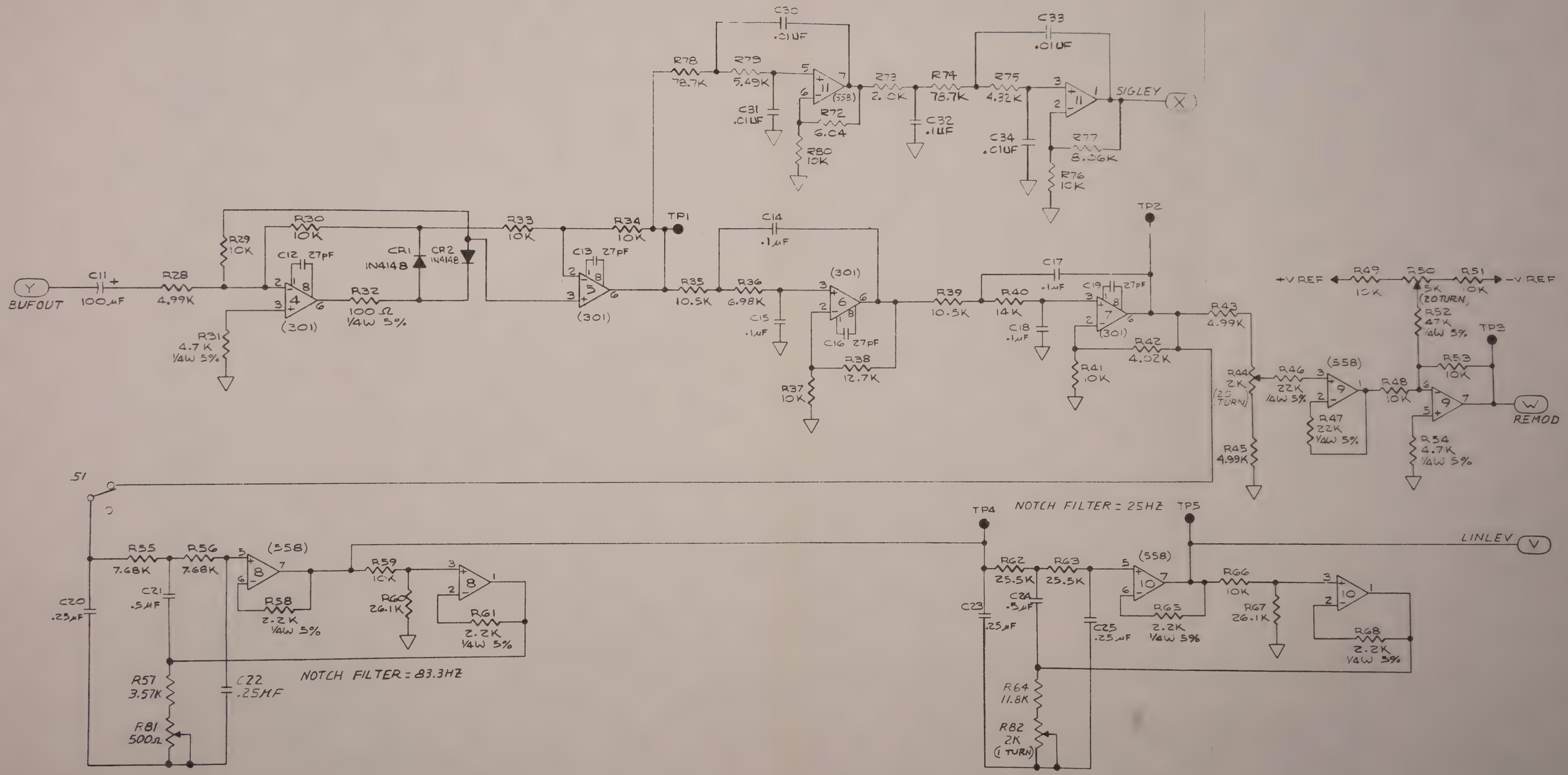

Figure FO-7. Repeat and Transmit Function Circuit Card 1A2, Schematic Diagram (Sheet 2 of 2)

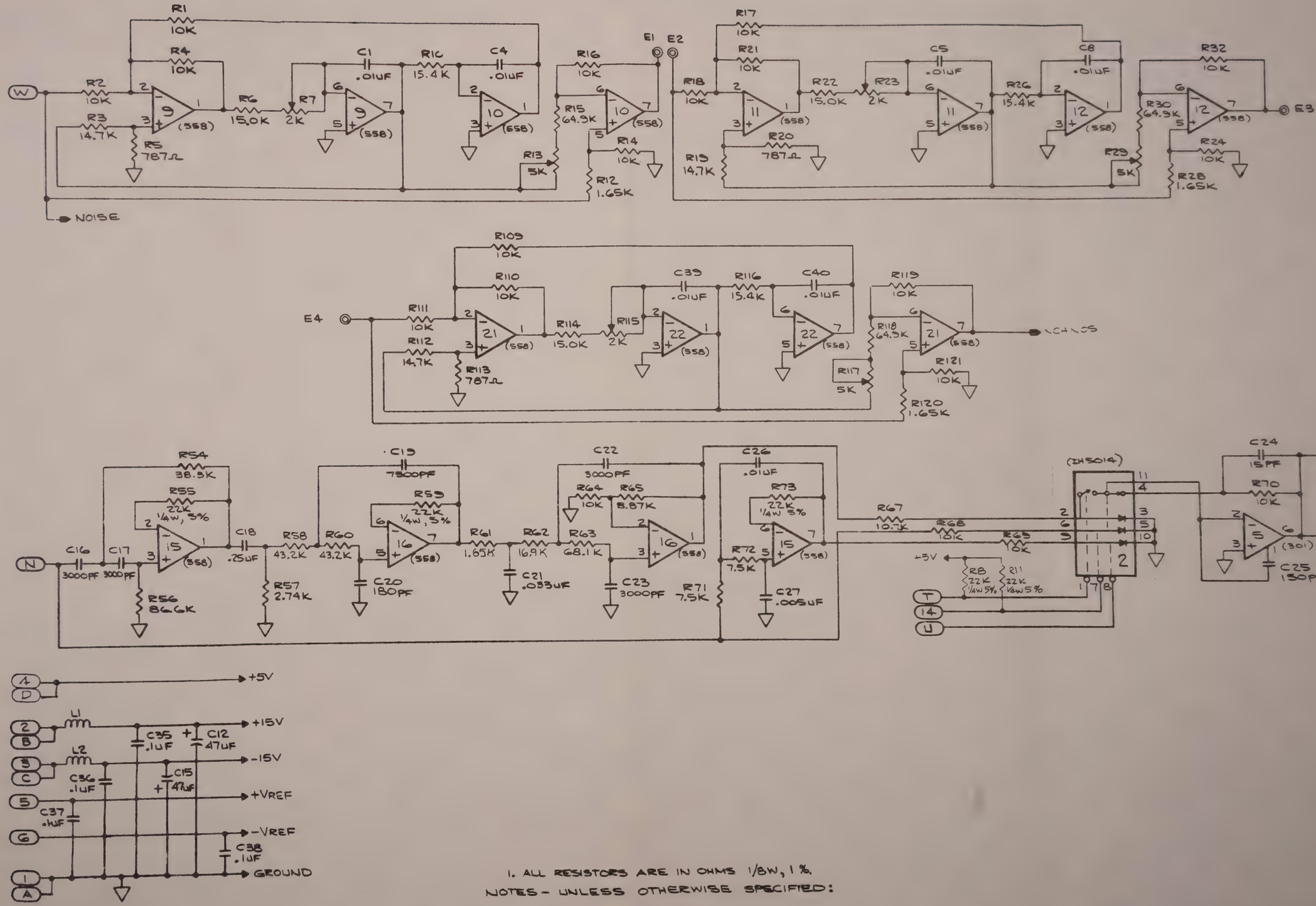

NOTES - UNLESS OTHERWISE SPECIFIED:

1. ALL RESISTORS ARE IN OHMS 1/8W, 1%.

Figure FO-8. Noise Detector Circuit Card 1A3, Schematic Diagram (Sheet 1 of 2)

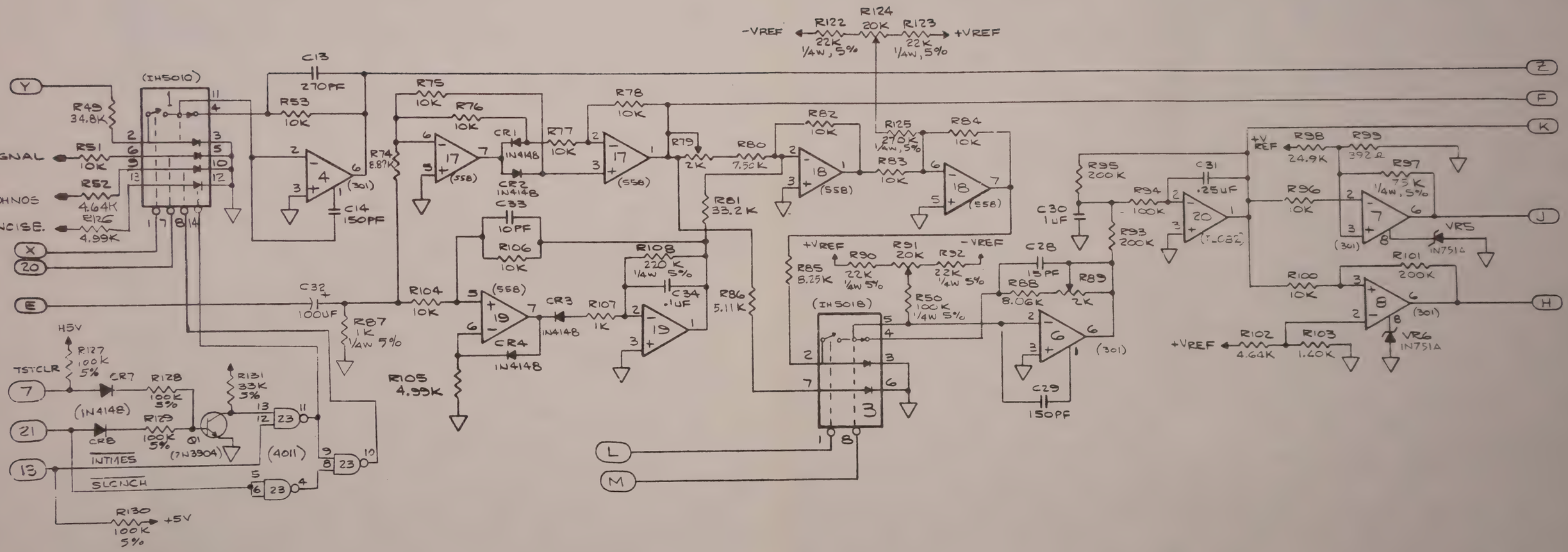

Figure FO-8. Noise Detector Circuit
Card 1A3, Schematic Diagram
(Sheet 2 of 2)

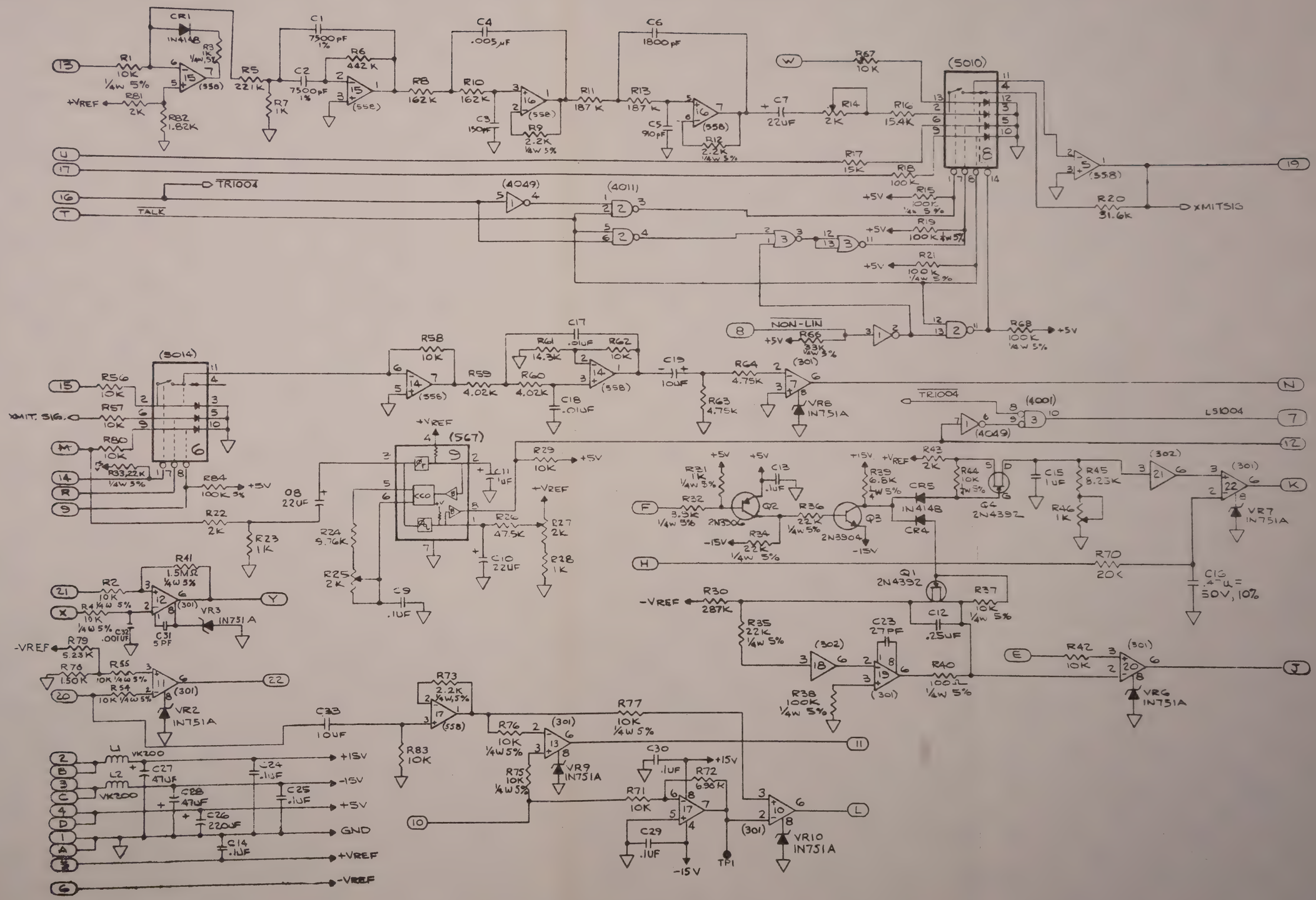

Figure FO-9. A/D Converter Circuit
Card 1A4, Schematic Diagram

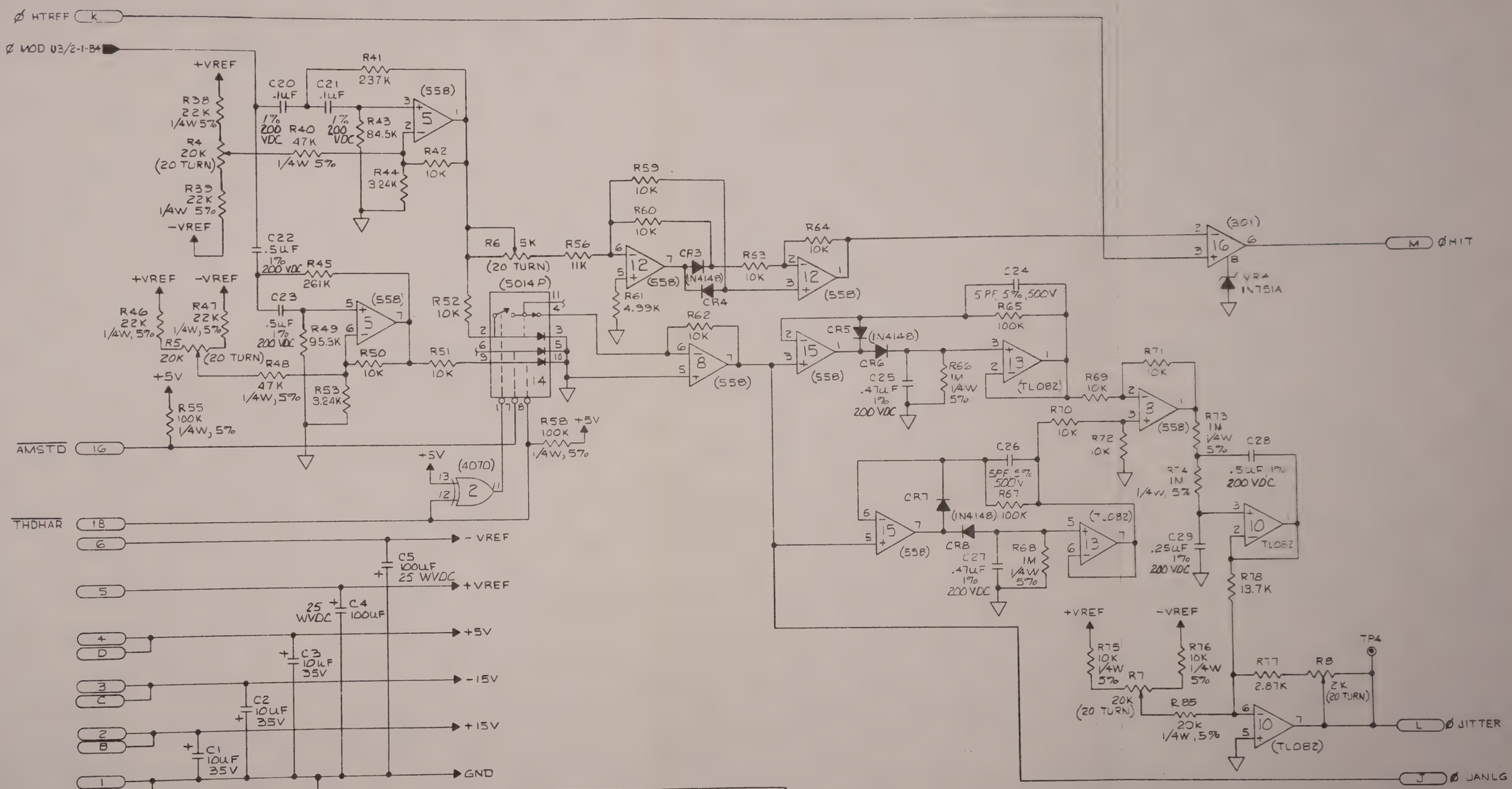

301	NC	7	4	NC	U16
558	NC	8	4	NC	U 5,8,9,11, (2,15)
5014	NC	NC	NC	NC	U14
4030	14	NC	NC	7	U2
311	NC	8	4	1	U6
3900	NC	NC	NC	7	U4
TL082	NC	8	4	NC	U3,1,10,13
IC TYPE	+5V	+15V	-15V	GND	REF DESIG
	PIN NUMBER				
POWER & GROUND					

3. LOCATIONAL CODING:
EXAMPLE: IMP J15/6-3-B8
- IMP — SIGNAL NAME
- J15 — DEVICE NO.
- 6 — P.N NO.
- 3 — PAGE NO.
- B8 — ZONE

2. ALL CAPS ARE IN MICROFARADS.
1. ALL RESISTORS ARE IN OHMS, 1/8W, 1%.

NOTES-UNLESS OTHERWISE SPECIFIED:

Figure FO-10. Phase Jitter Circuit Card 1A5, Schematic Diagram (Sheet 1 of 2)

SEE SHEET ONE

AGCOUT (Z) R9 73.2K R10 147K C6 4700PF 1%, 500V C7 220PF 1% 500V R11 59K C8 2200PF 1%, 500V R12 187K C9 1000PF 1% 500V C10 .01uF, 1%, 200 VDC R13 26.7K C11 .01uF 1% 200 VDC R14 63.4K R15 10K 1/4W, 5% R57, 560K, 1/4W, 5% TP1 R17 20K 1/4W, 5% +5V -VREF R1 50K (20 TURN) R79 250K (S.T.) TP2 C30 330pF C31 330pF R18 100K 1/4W, 5% R19 73.2K R20 73.2K C12 .002uF, 2% 200VDC R21 196K R16 8.2M 1/4W 5% SYNCDC (U) TL082 R22 48.7K R23 12.7K C14 .1uF, 1%, 200 VDC R24 12.7K C13 .01uF 1% 200VDC R25 48.7K C15 .01uF, 1% 200VDC R26 48.7K C16 6800PF 5% 100V R27 1M (558) (311) (4070) (TL082)

TLO82) R29 90.9K R3 20K (20 TURN) C18 4700PF 5% 500V R30 49.9K R31 27.4K R34 47.5K R28 2.21K R2 5K (20 TURN) Q1 (2N3904) R32 10K 1/4W, 5% R33 47.5K R35 180Ω 1/4W, 5% +15V C19 47uF 10% 20 WVD VR1 1N5434A C17 10uF 20V 10% (3900) CR2 (1N4148) R36 0K 1/4W, 5% Q2 (2N3904) R37 470Ω 1/4W, 5% TP3

BLOUT (7)

VSQED (8)

PLLVCO (W)

(9)

MOD C22 & C22-2-D7

Figure FO-10. Phase Jitter Circuit Card 1A5, Schematic Diagram (Sheet 2 of 2)

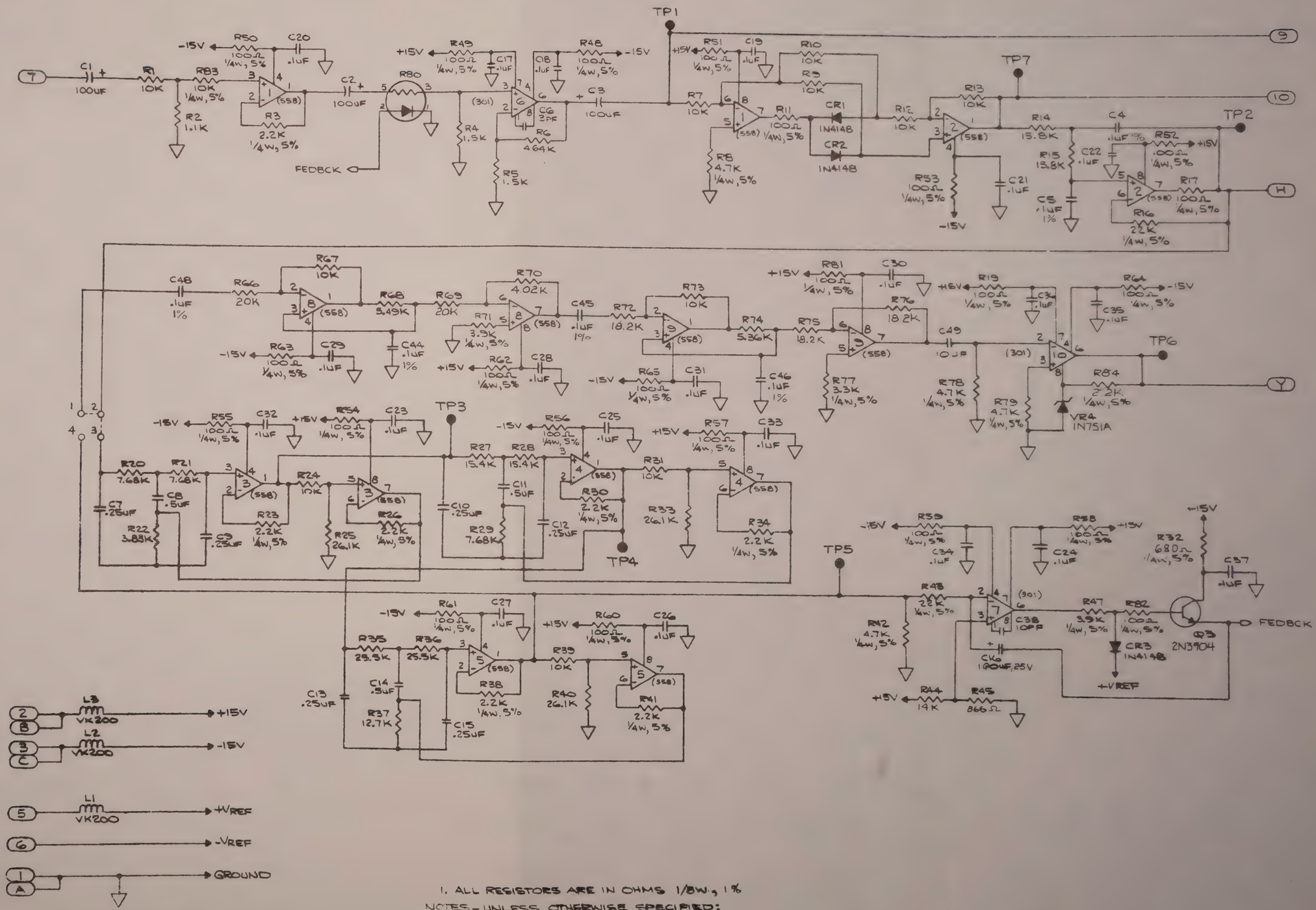

Figure FO-11. Phase AGC Circuit Card 1A6, Schematic Diagram

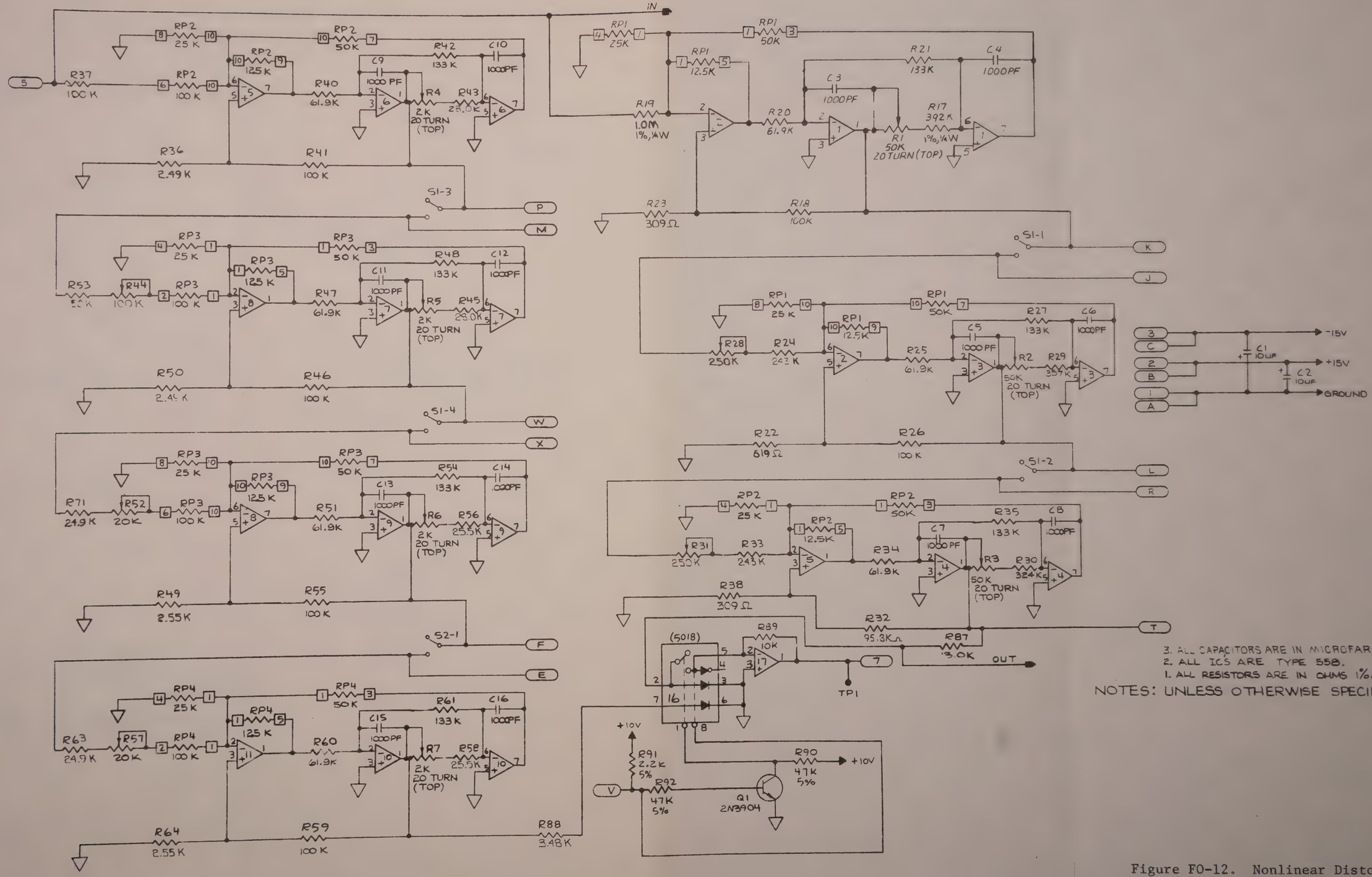

3. ALL CAPACITORS ARE IN MICROFARADS.
2. ALL ICS ARE TYPE 558.
1. ALL RESISTORS ARE IN OHMS 1%, ⅛W

NOTES: UNLESS OTHERWISE SPECIFIED-

Figure FO-12. Nonlinear Distortion Circuit Card 1A7, Schematic Diagram (Sheet 1 of 2)

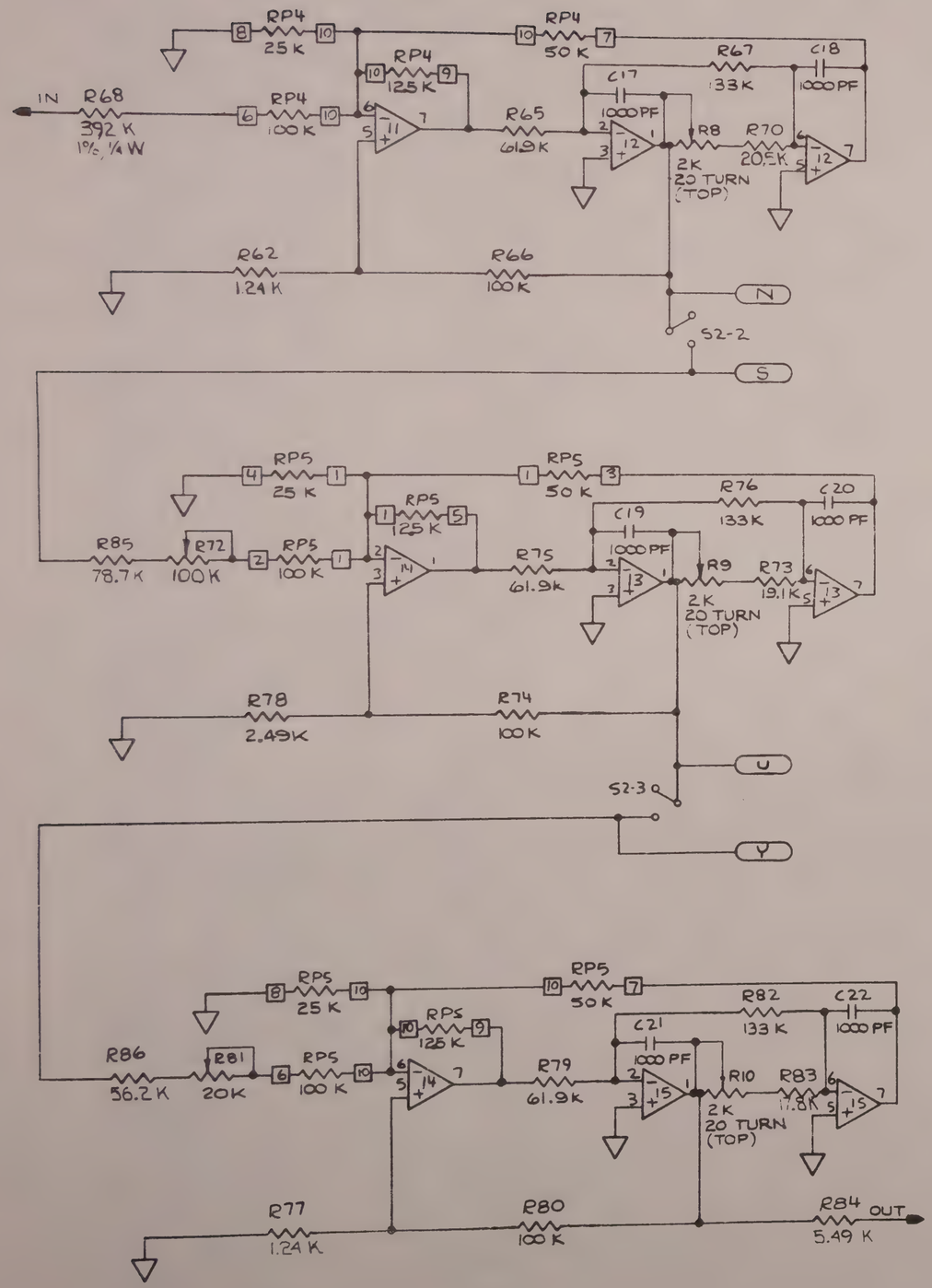

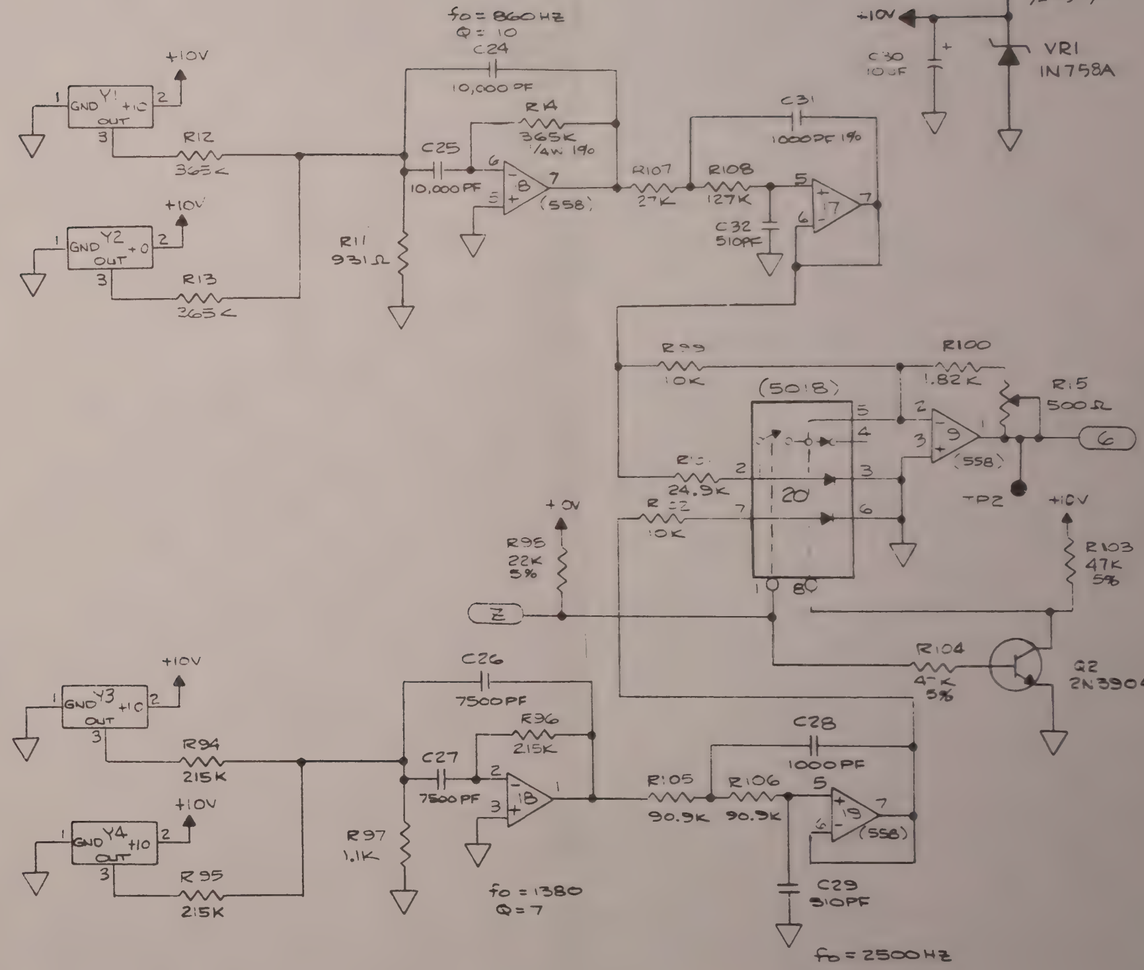

Figure FO-12. Nonlinear Distortion Circuit Card 1A7, Schematic Diagram (Sheet 2 of 2)

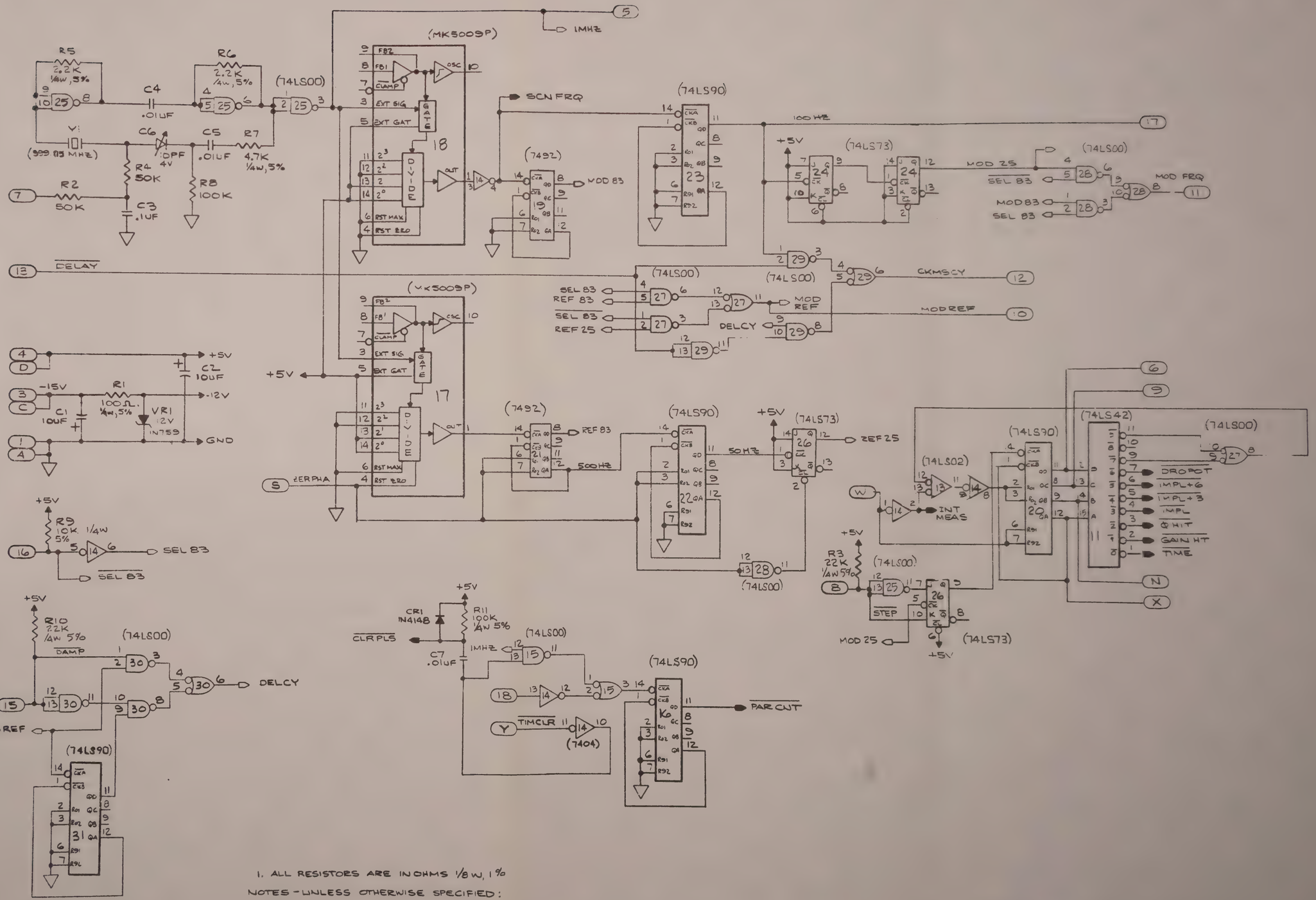

1. ALL RESISTORS ARE IN OHMS 1/8 W, 1%

NOTES - UNLESS OTHERWISE SPECIFIED:

Figure FO-13. Data Accumulator Circuit Card 1A8, Schematic Diagram (Sheet 1 of 2)

H INT CLR

Z TIMXFR

CB .01uF

CLRPLS

PAR CNT

INT MEAS

(74LS02)

V DO CNT

DROPOT

U IM+6CT

IMPL+6

T IM+3CT

IMPL+3

(74LS00)

(74LS02)

SCN FRQ

14 GATE CT

(74LS00)

CNTX

8 DS3 CNT DS2 DS1 SCN DS0

6 DS3 CNT DS2 DS1 SCN DS0

5 DS3 CNT DS2 DS1 SCN DS0

(MK5007P)

R14 5.6K

R12 5.6K R13 5.6K

R15 5.6K

1/4W 5%

R IMPCNT

IMPL

(74LS00)

(74LS02)

P ØHT CNT

ØHIT

M GHT CNT

GAINHT

L MIN CNT

TIME

(74LS00)

(74LS02)

4 DS3 CNT DS2 DS1 SCN DS0

3 DS3 CNT DS2 DS1 SCN DS0

2 DS3 CNT DS2 DS1 SCN DS0

1 DS3 CNT DS2 DS1 SCN DS0

(MK5007P)

+5V

Q8

Q7

Q6

Q5

(2N3906)

19

20

21

22

(2N3904)

Q1

Q2

Q3

Q4

E

F

J

K

Figure FO-13. Data Accumulator Circuit Card 1A8, Schematic Diagram (Sheet 2 of 2)

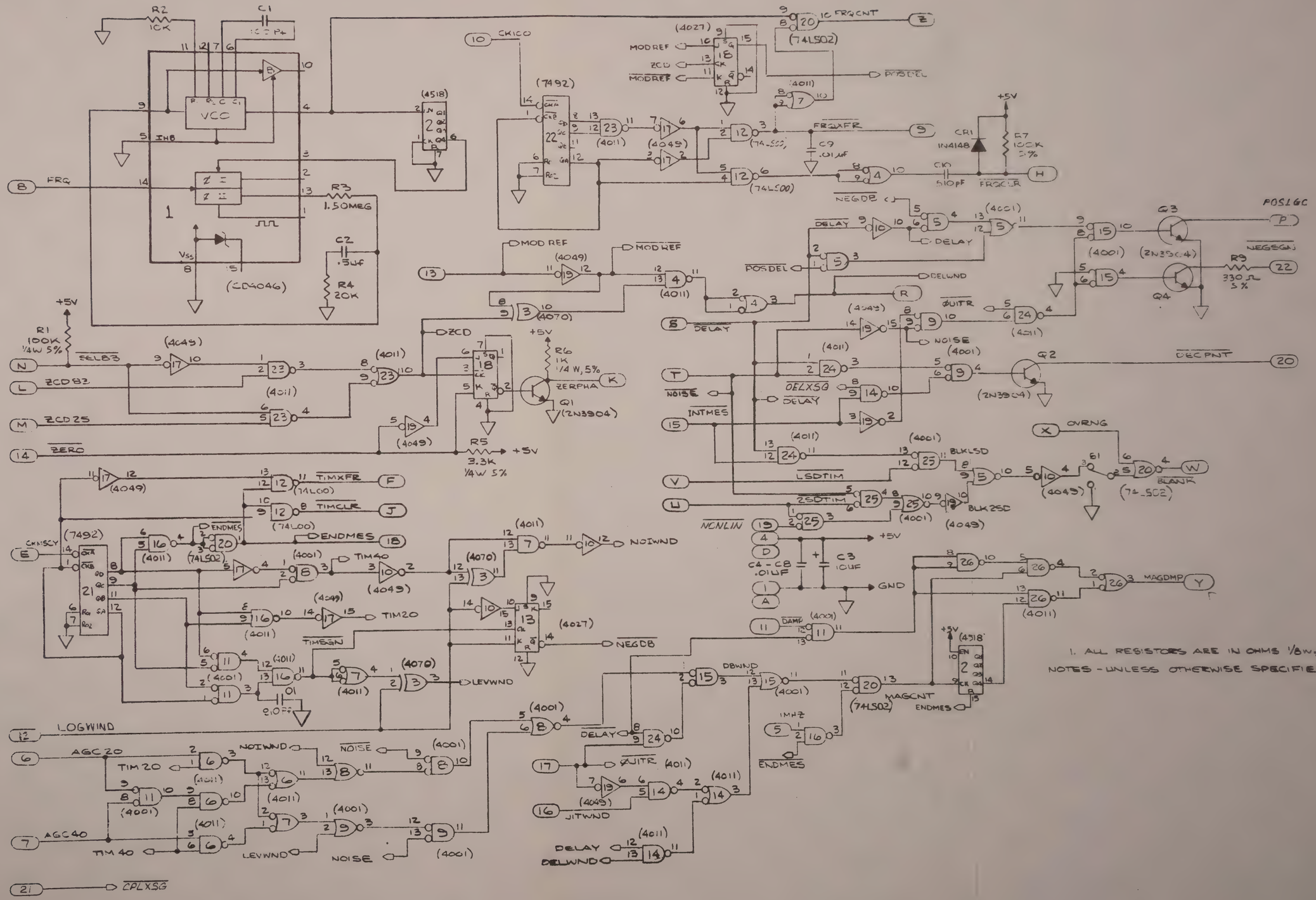

Figure FO-14. Data and Display Circuit Card 1A9, Schematic Diagram

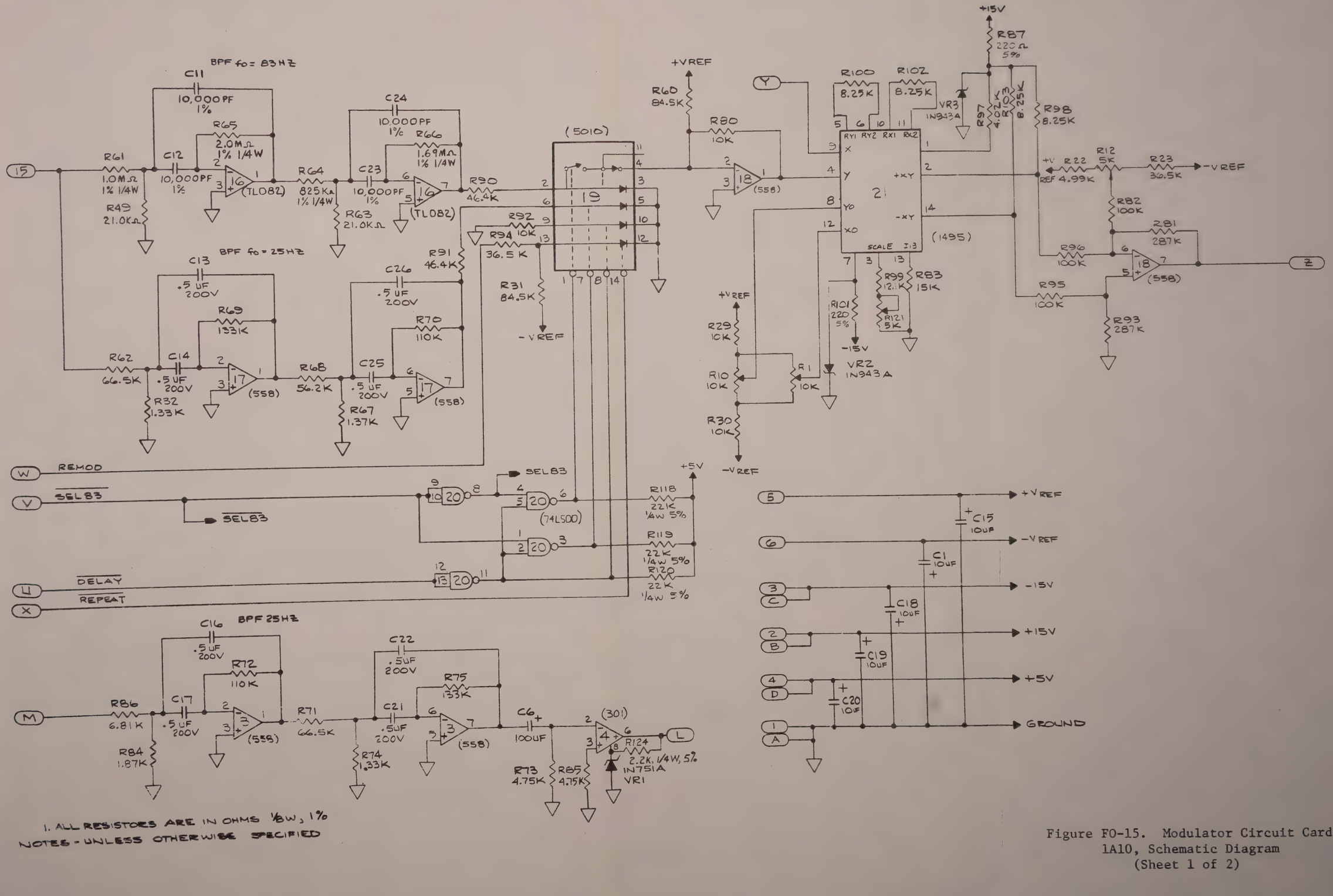

Figure FO-15. Modulator Circuit Card 1A10, Schematic Diagram (Sheet 1 of 2)

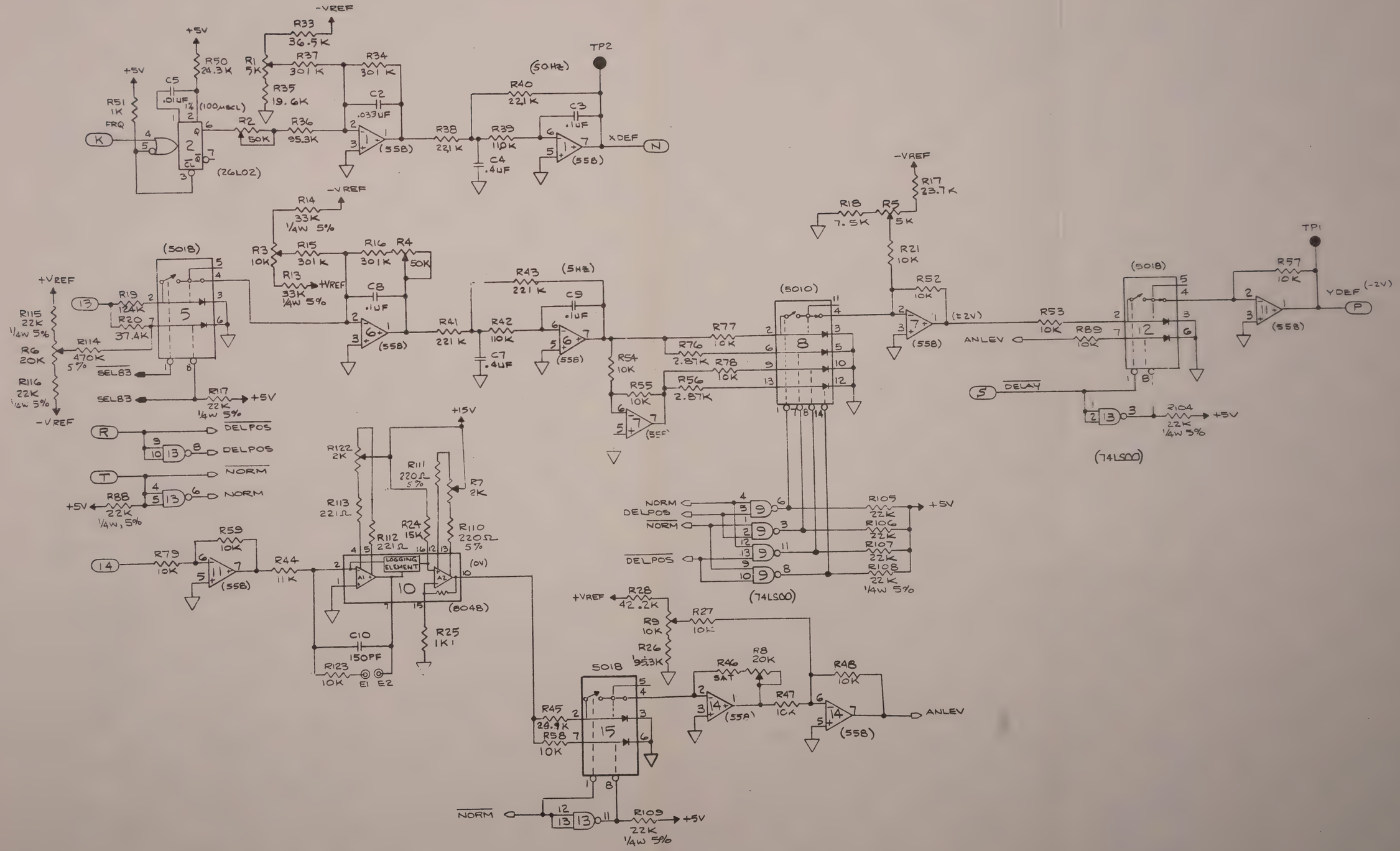

Figure FO-15. Modulator Circuit Card 1A10, Schematic Diagram (Sheet 2 of 2)

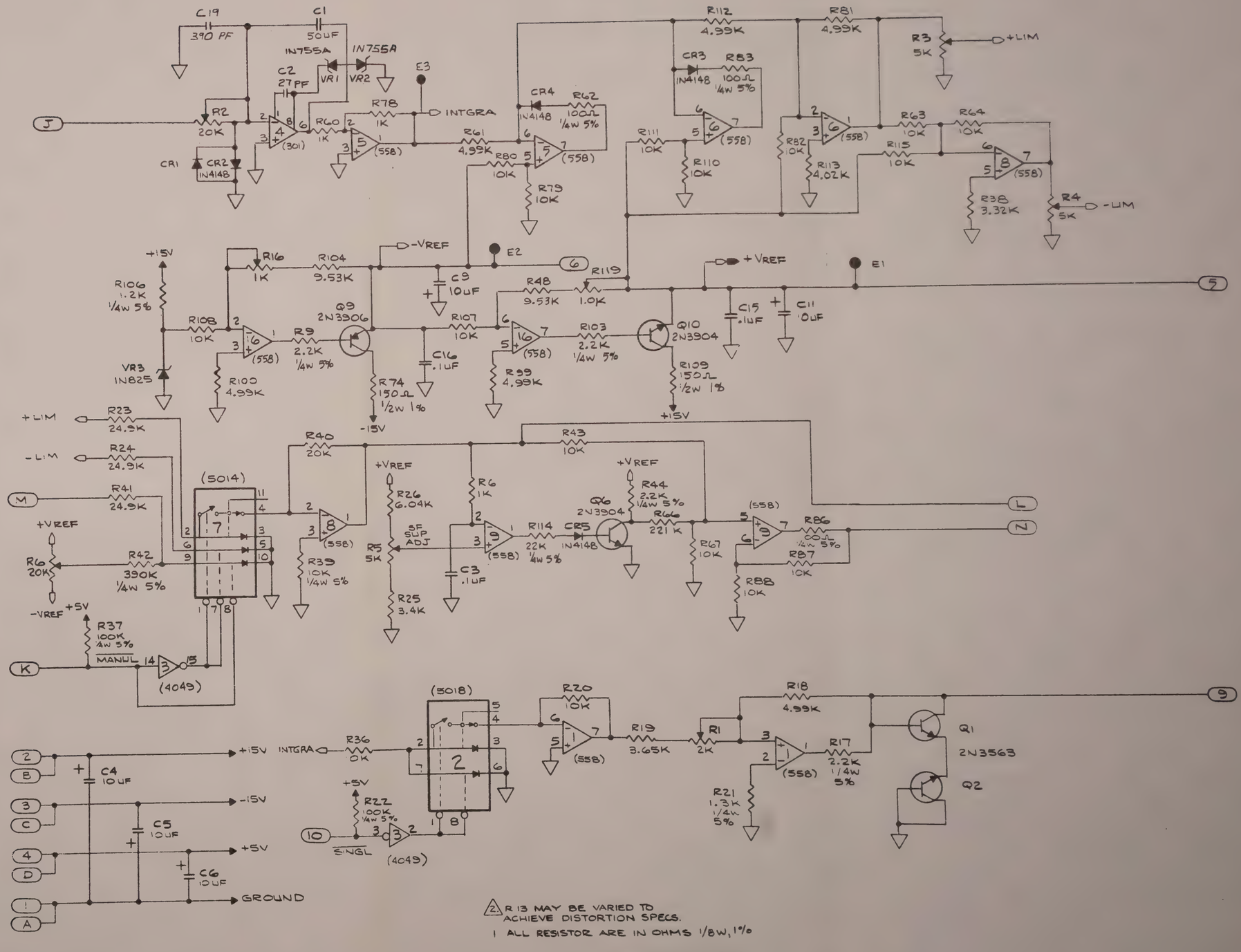

2 R 13 MAY BE VARIED TO ACHIEVE DISTORTION SPECS.

1 ALL RESISTOR ARE IN OHMS 1/8W, 1%

NOTES- UNLESS OTHERWISE SPECIFIED:

Figure FO-16. Sweep and VCO Circuit Card 1A11, Schematic Diagram (Sheet 1 of 2)

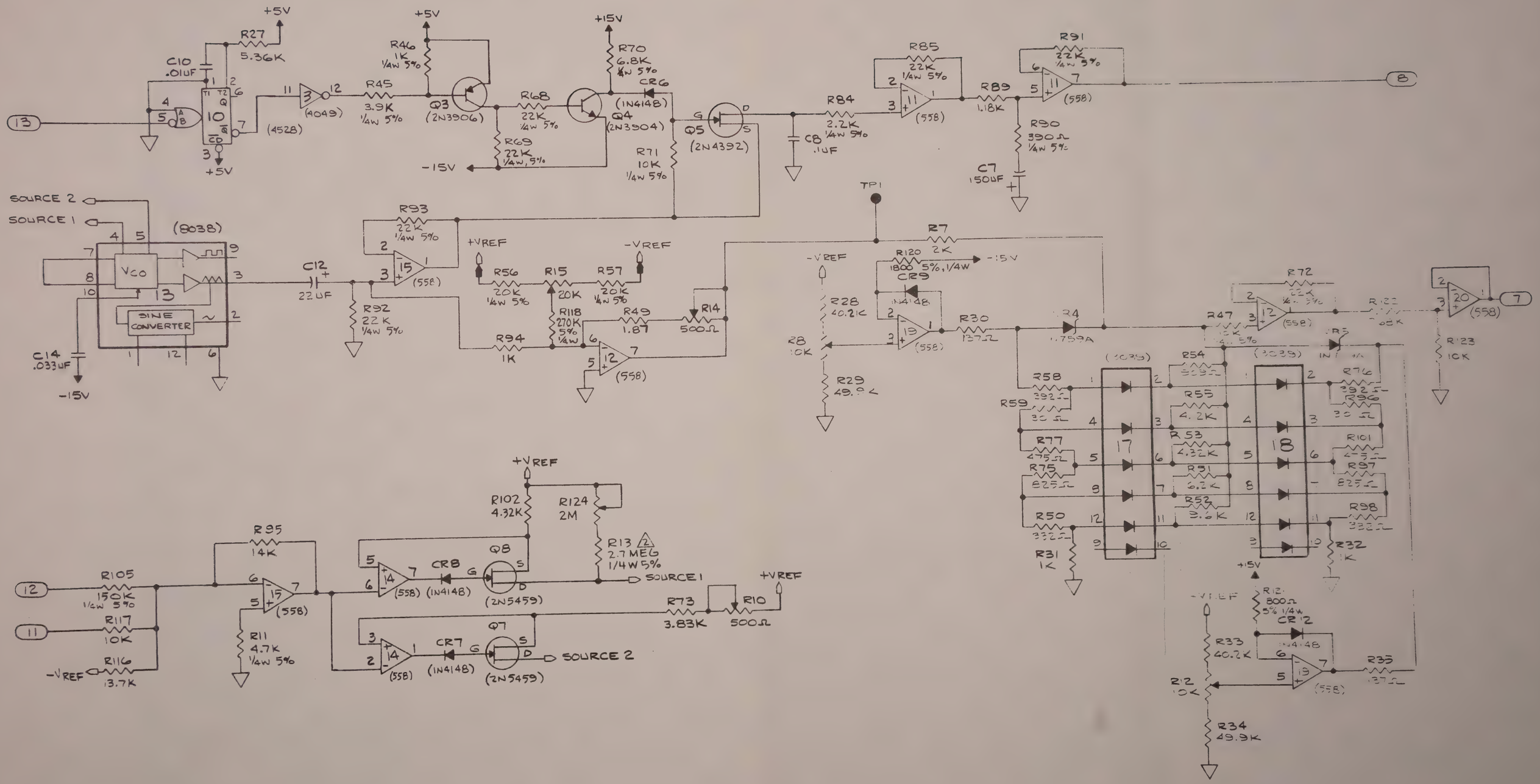

Figure FO-16. Sweep and VCO Circuit Card 1A11, Schematic Diagram (Sheet 2 of 2)

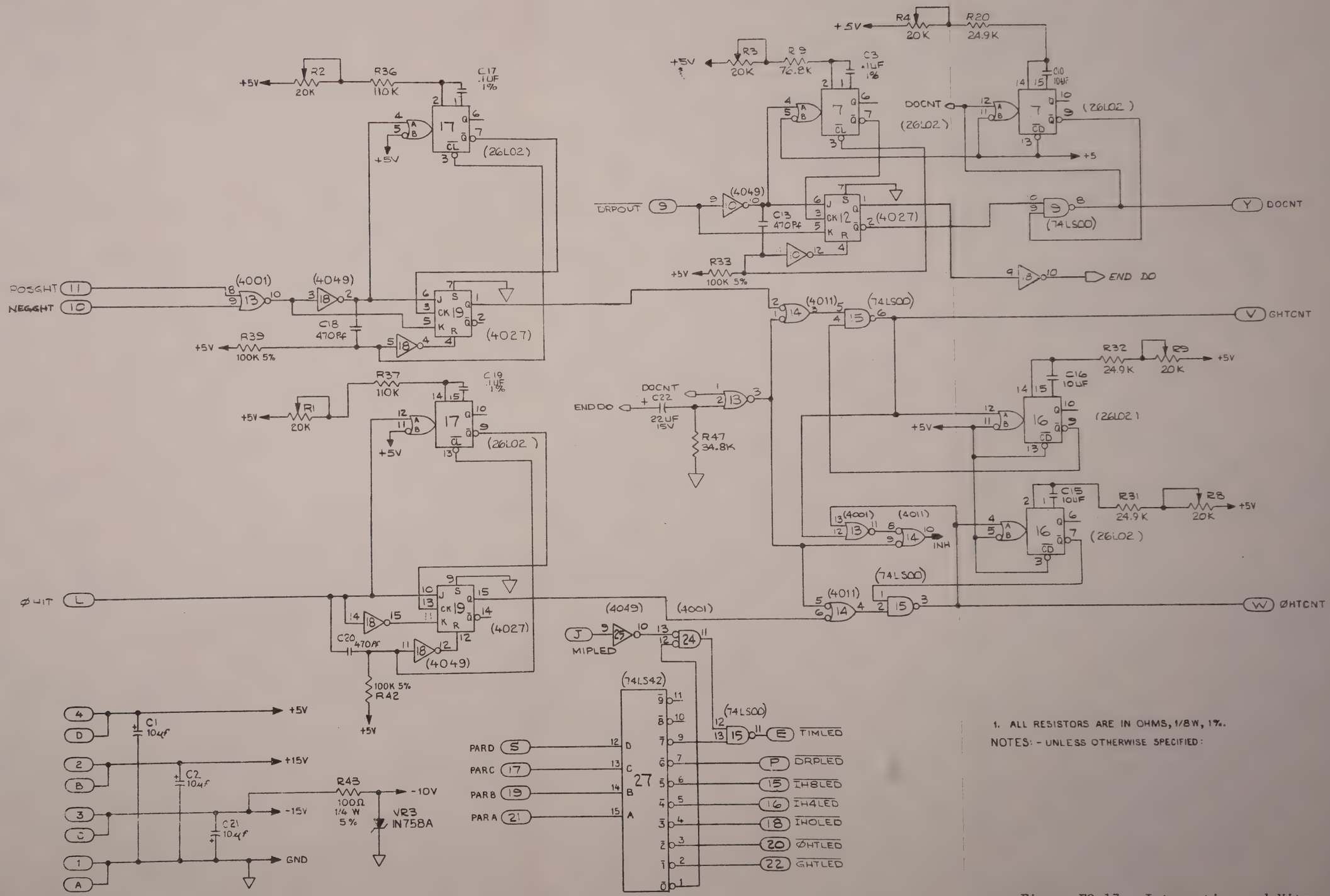

1. ALL RESISTORS ARE IN OHMS, 1/8W, 1%.

NOTES: - UNLESS OTHERWISE SPECIFIED:

Figure FO-17. Integration and Hits Process Circuit Card 1A12, Schematic Diagram (Sheet 1 of 2)

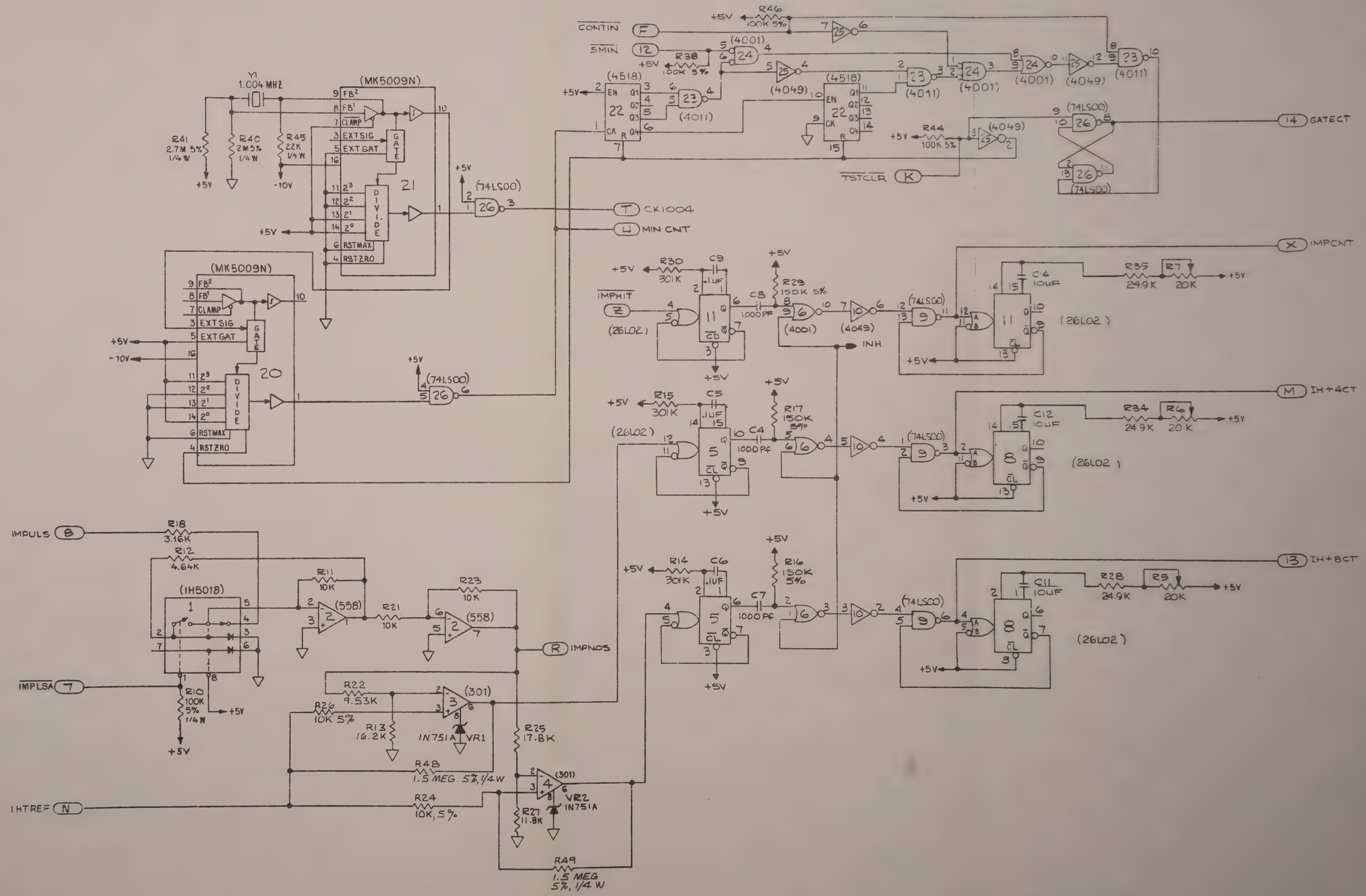

Figure FO-17. Integration and Hits Process Circuit Card 1A12, Schematic Diagram (Sheet 2 of 2)

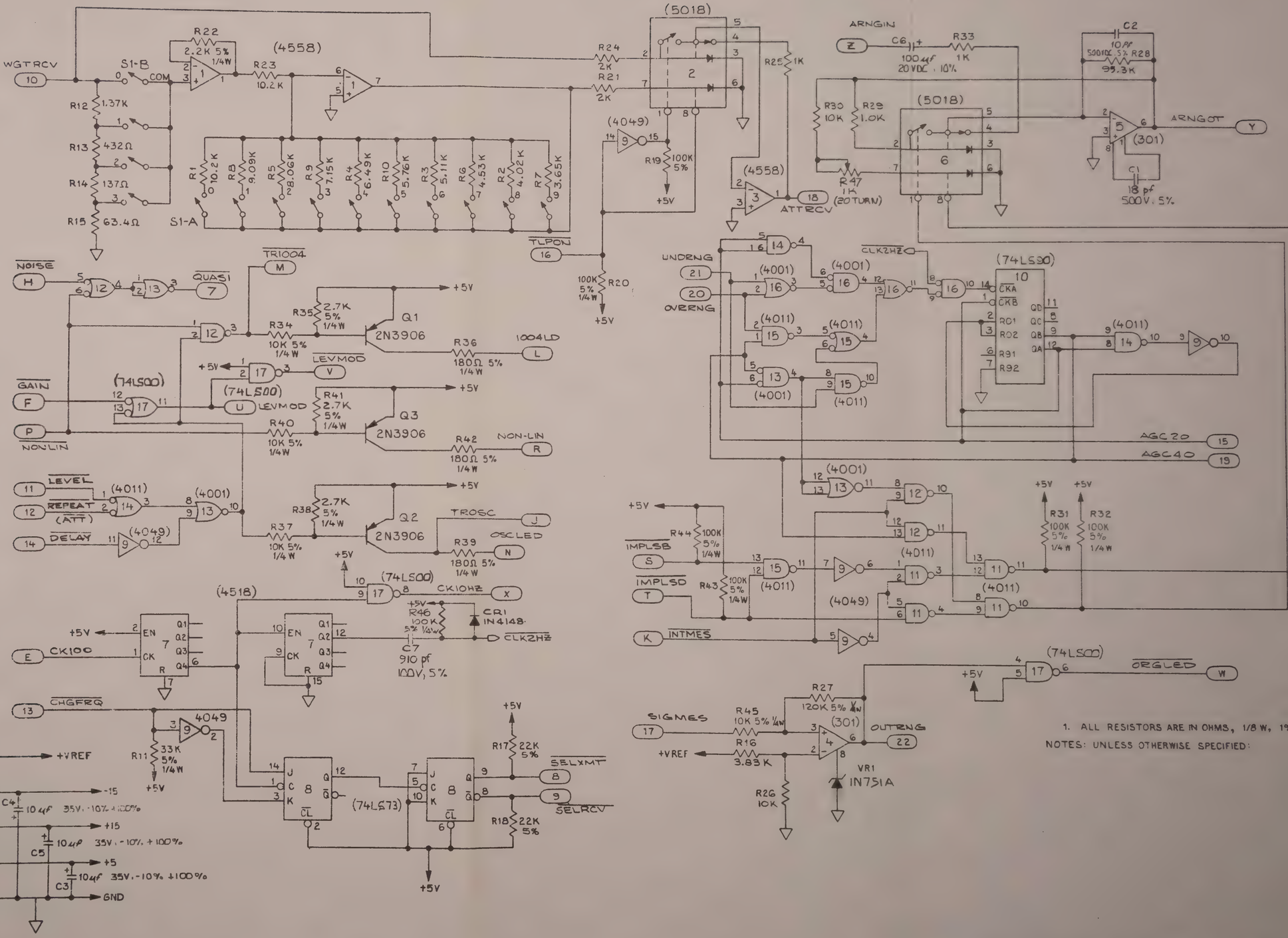

1. ALL RESISTORS ARE IN OHMS, 1/8 W, 1%.

NOTES: UNLESS OTHERWISE SPECIFIED:

Figure FO-18. Autoranging and TLP Circuit Card 1A13, Schematic Diagram

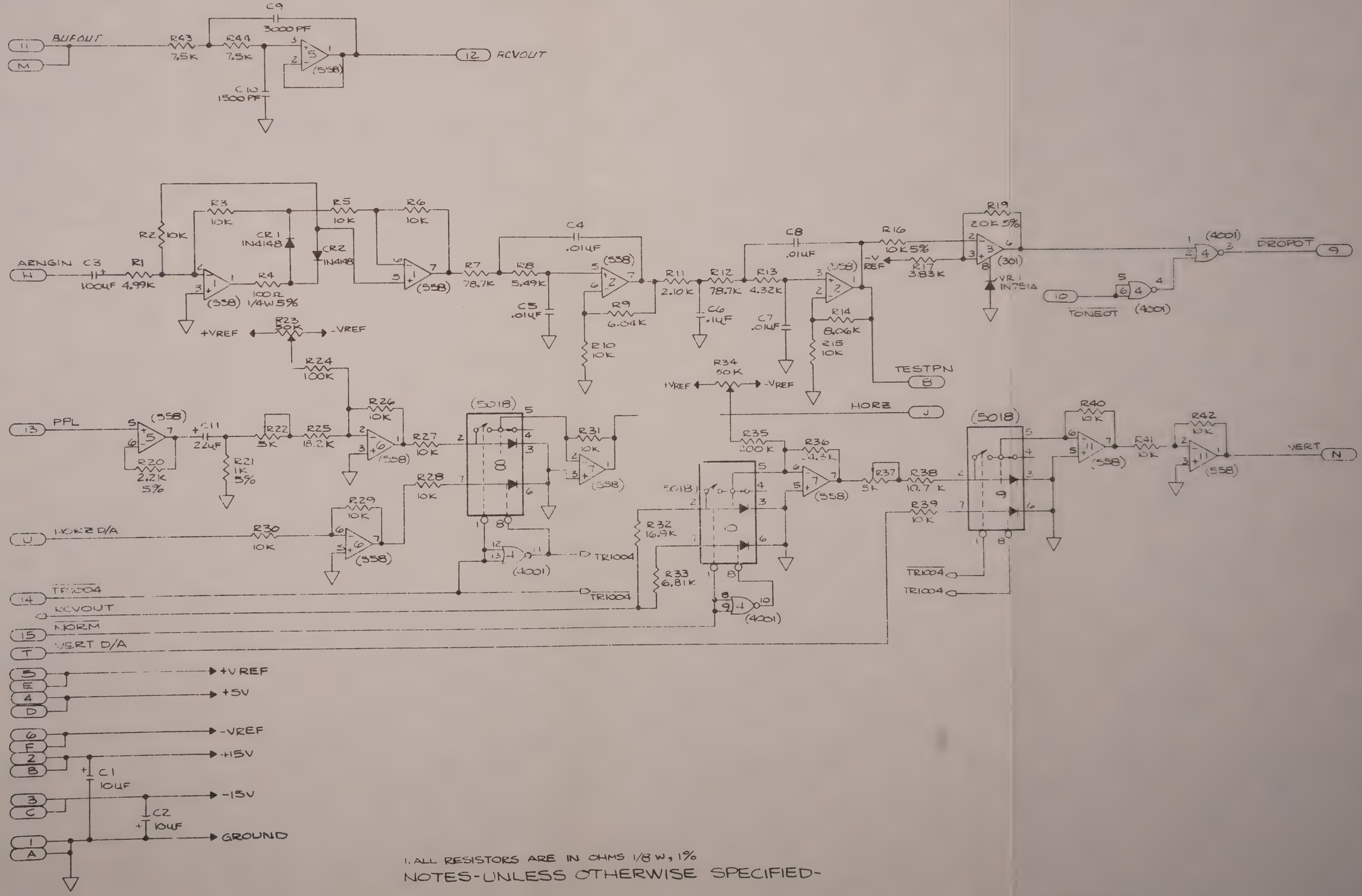

1. ALL RESISTORS ARE IN OHMS 1/8 W, 1%

NOTES-UNLESS OTHERWISE SPECIFIED-

Figure FO-19. Fade Out Circuit Card 1A14, Schematic Diagram

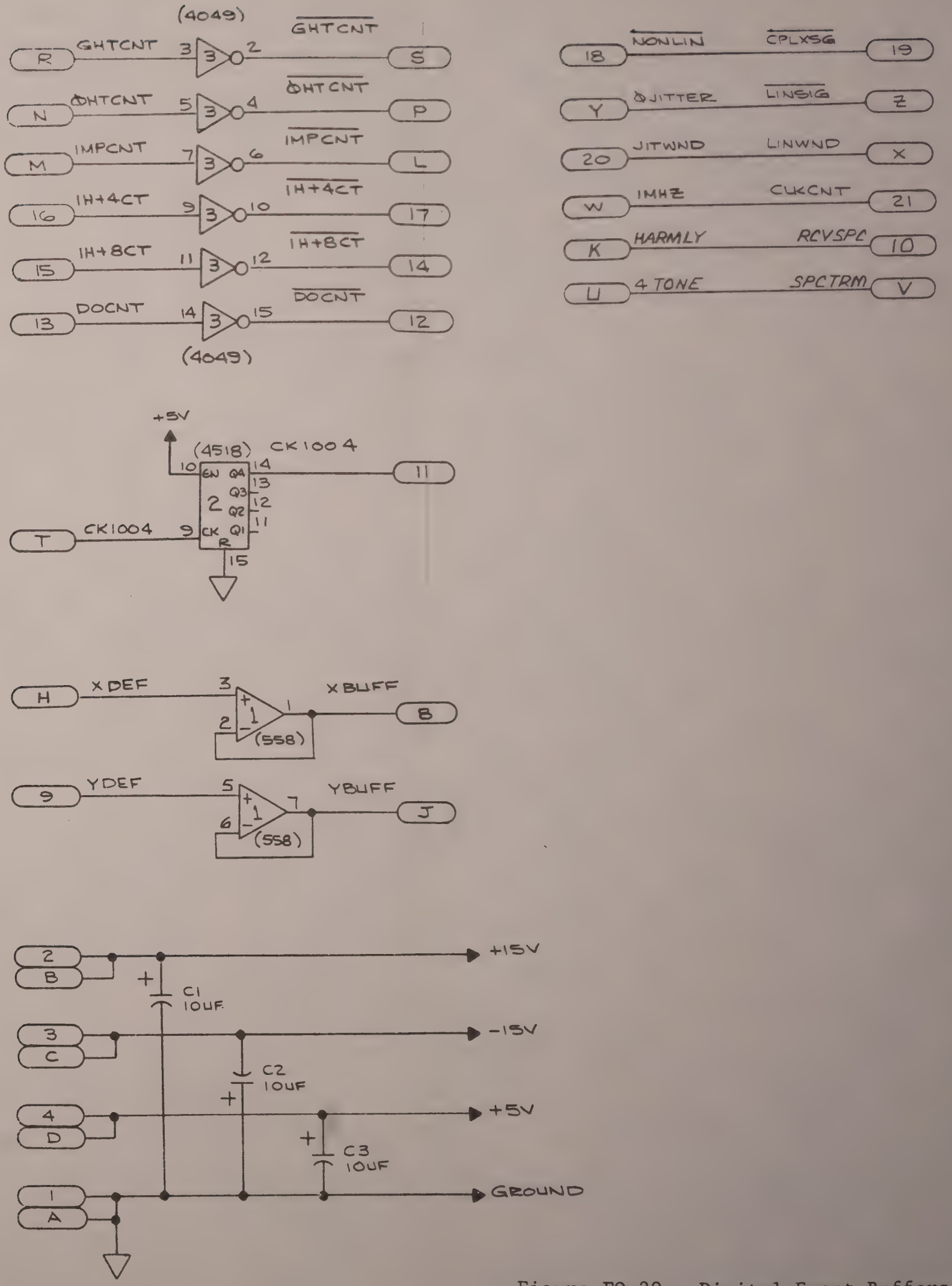

Figure FO-20. Digital Event Buffers Circuit Card 1A15 (Used on Model 520B2-07), Schematic Diagram

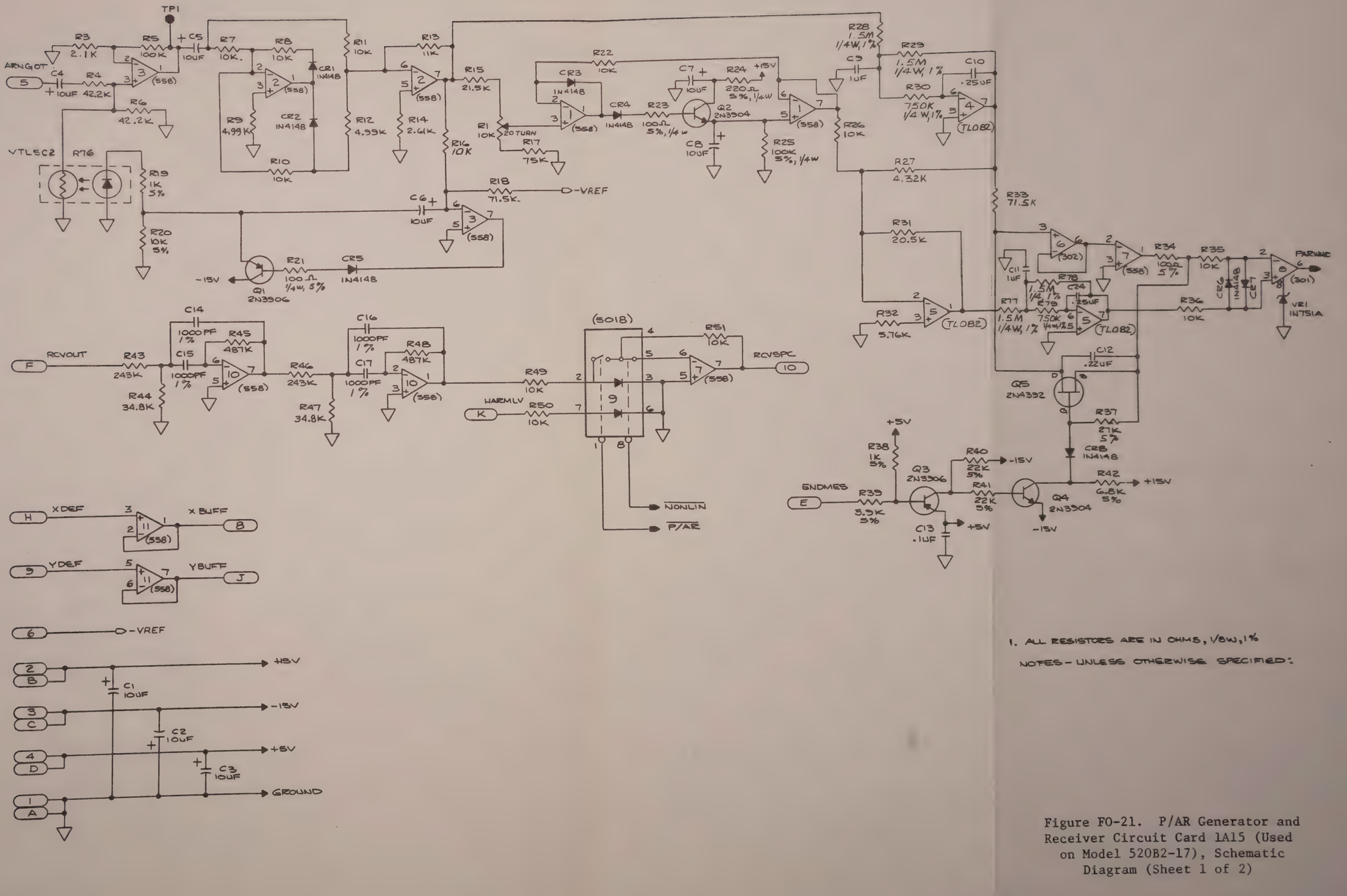

1. ALL RESISTORS ARE IN OHMS, 1/8W, 1%

NOTES - UNLESS OTHERWISE SPECIFIED:

Figure FO-21. P/AR Generator and Receiver Circuit Card 1A15 (Used on Model 520B2-17), Schematic Diagram (Sheet 1 of 2)

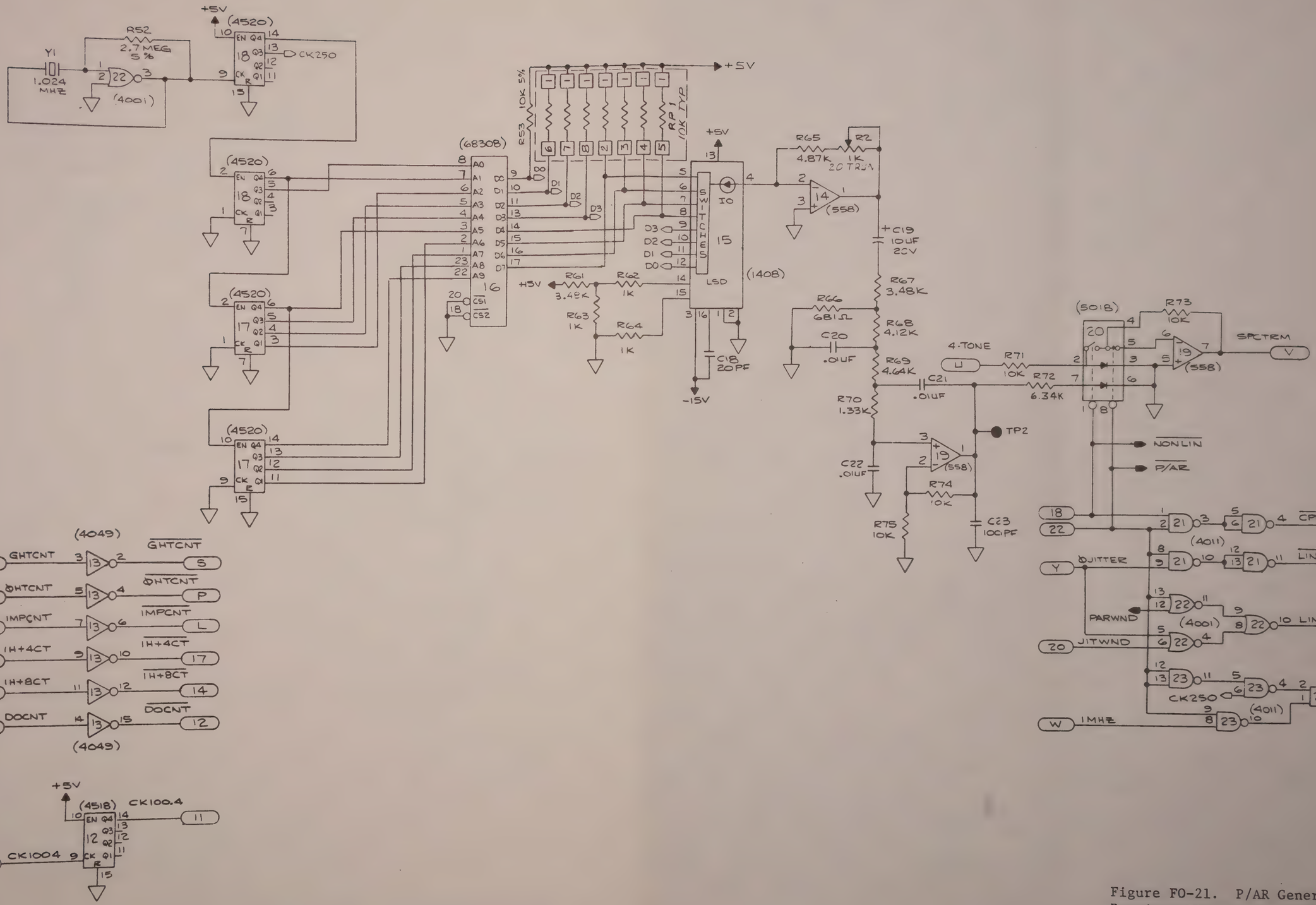

Figure FO-21. P/AR Generator and Receiver Circuit Card 1A15 (Used on Model 520B2-17), Schematic Diagram (Sheet 2 of 2)

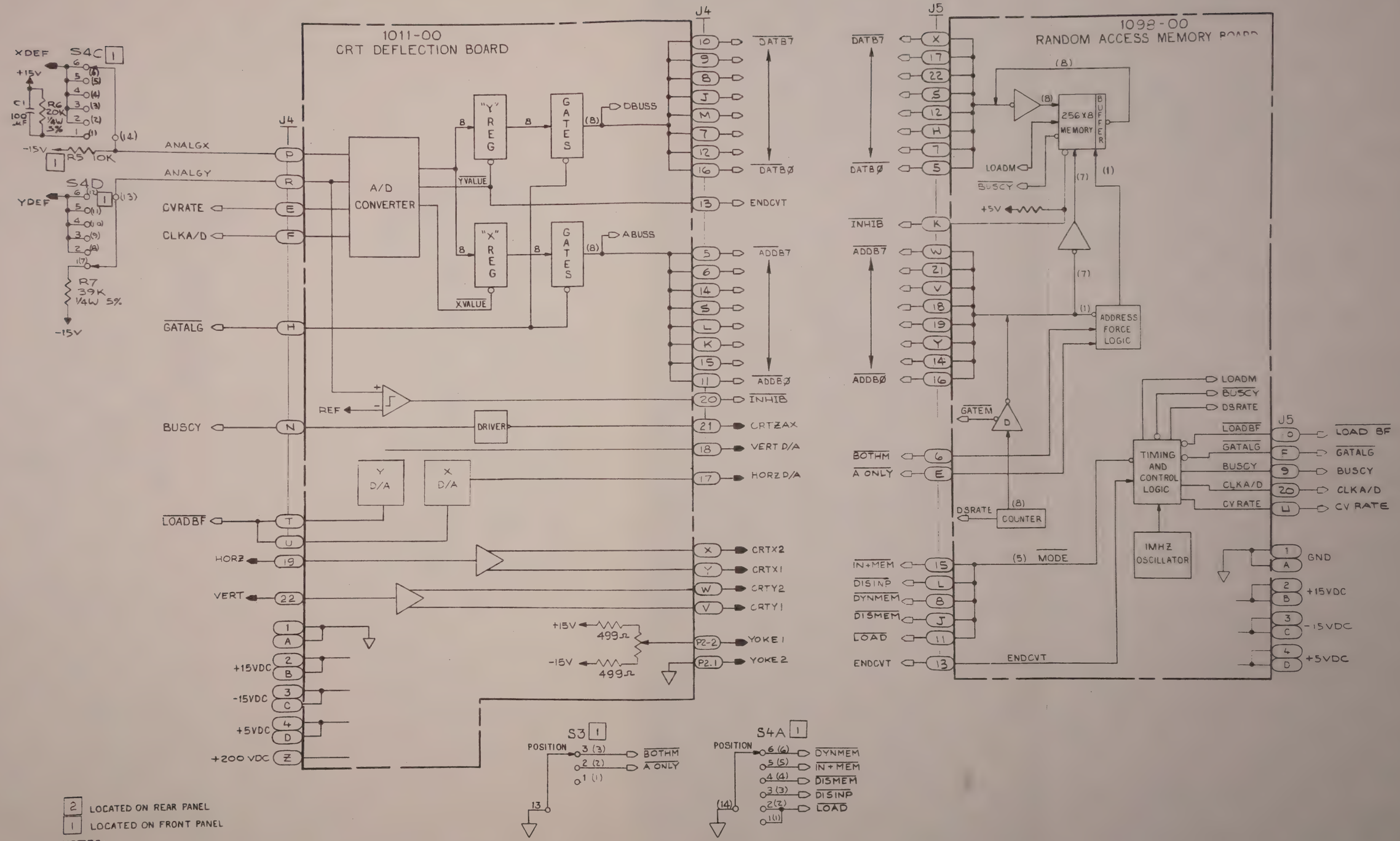

Figure FO-22. Model 500B Mainframe, Overall Diagram (Sheet 1 of 2)

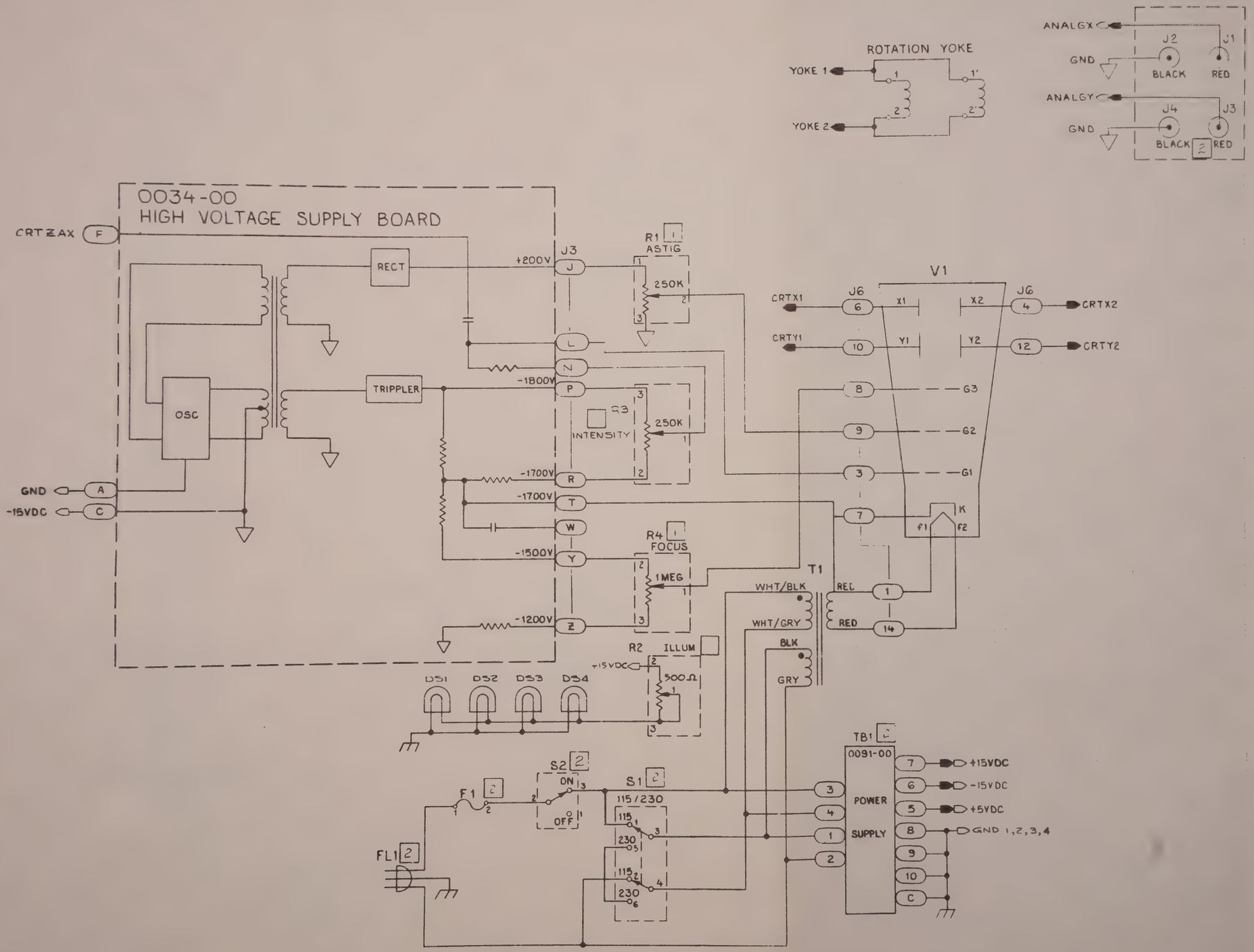

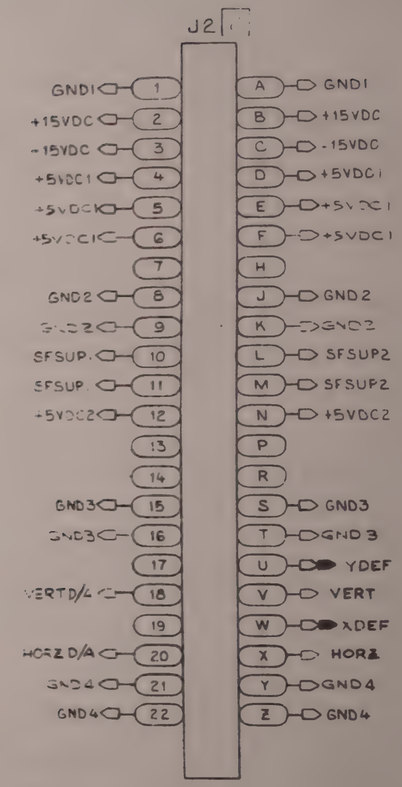

Figure FO-22. Model 500B Mainframe, Overall Diagram (Sheet 2 of 2)

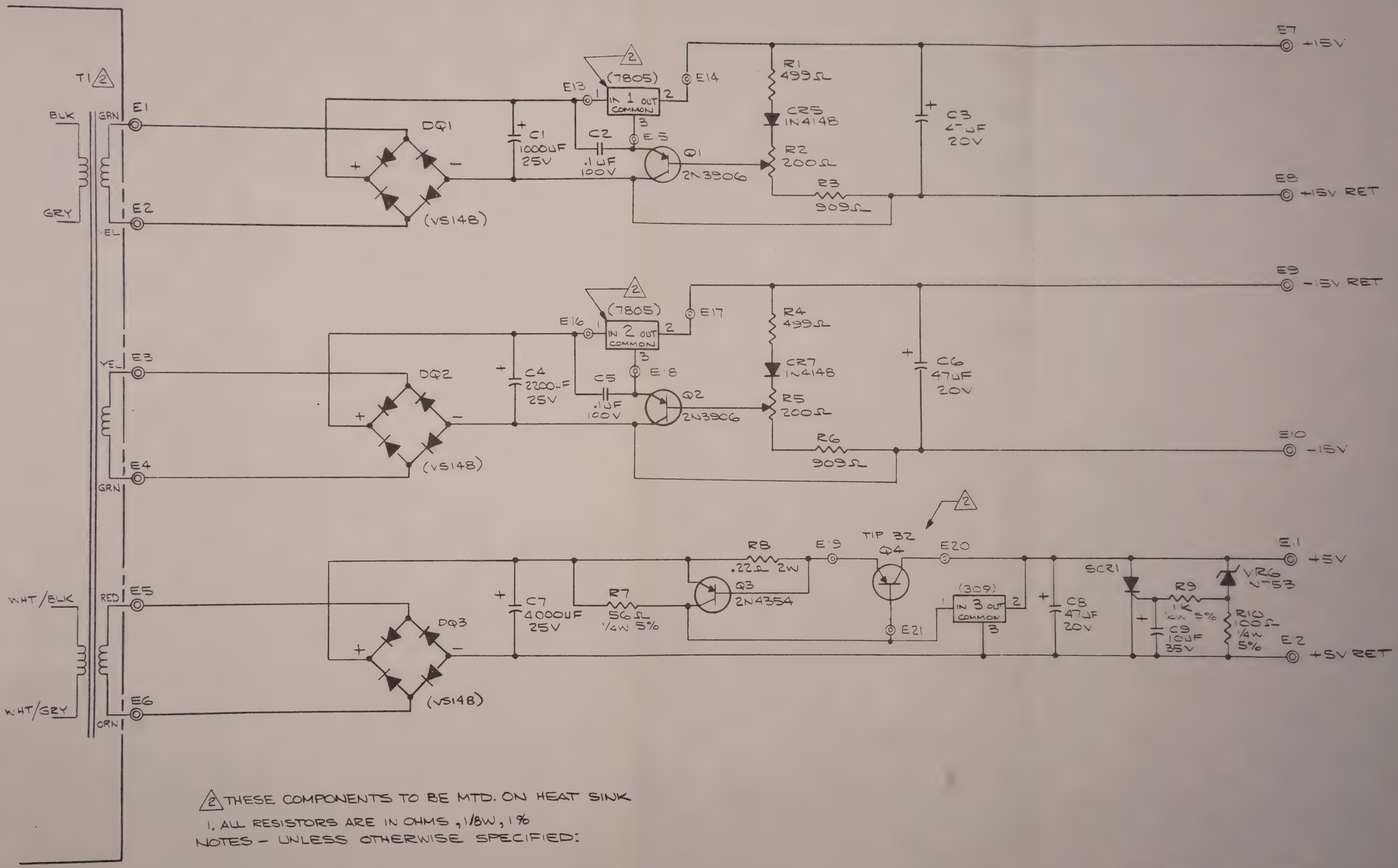

2 THESE COMPONENTS TO BE MTD. ON HEAT SINK

NOTES – UNLESS OTHERWISE SPECIFIED:

1. ALL RESISTORS ARE IN OHMS, 1/8W, 1%

Figure FO-23. Power Supply Circuit Card 2A1A1A1, Schematic Diagram

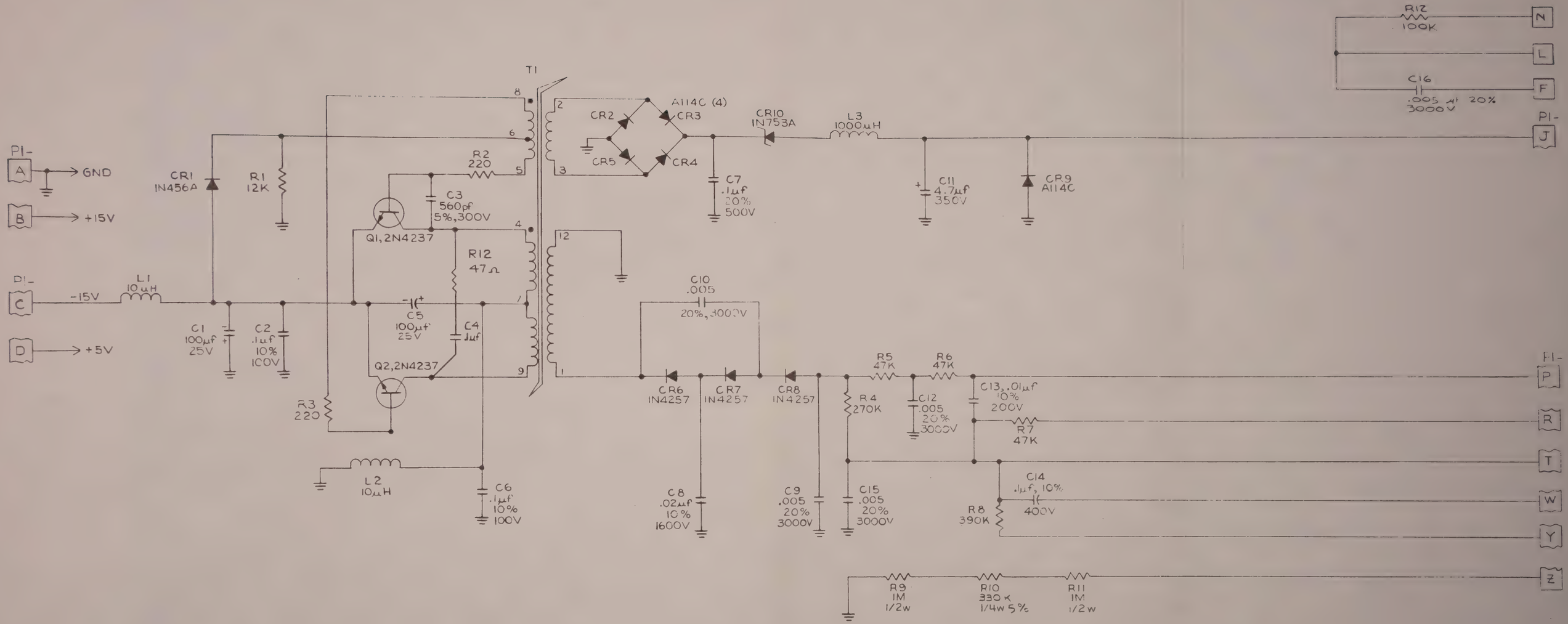

NOTES: UNLESS OTHERWISE SPECIFIED
1. ALL RESISTOR ARE ± 5%, 1/4w

Figure F0-24. CRT Power Supply Circuit Card 2A3, Schematic Diagram

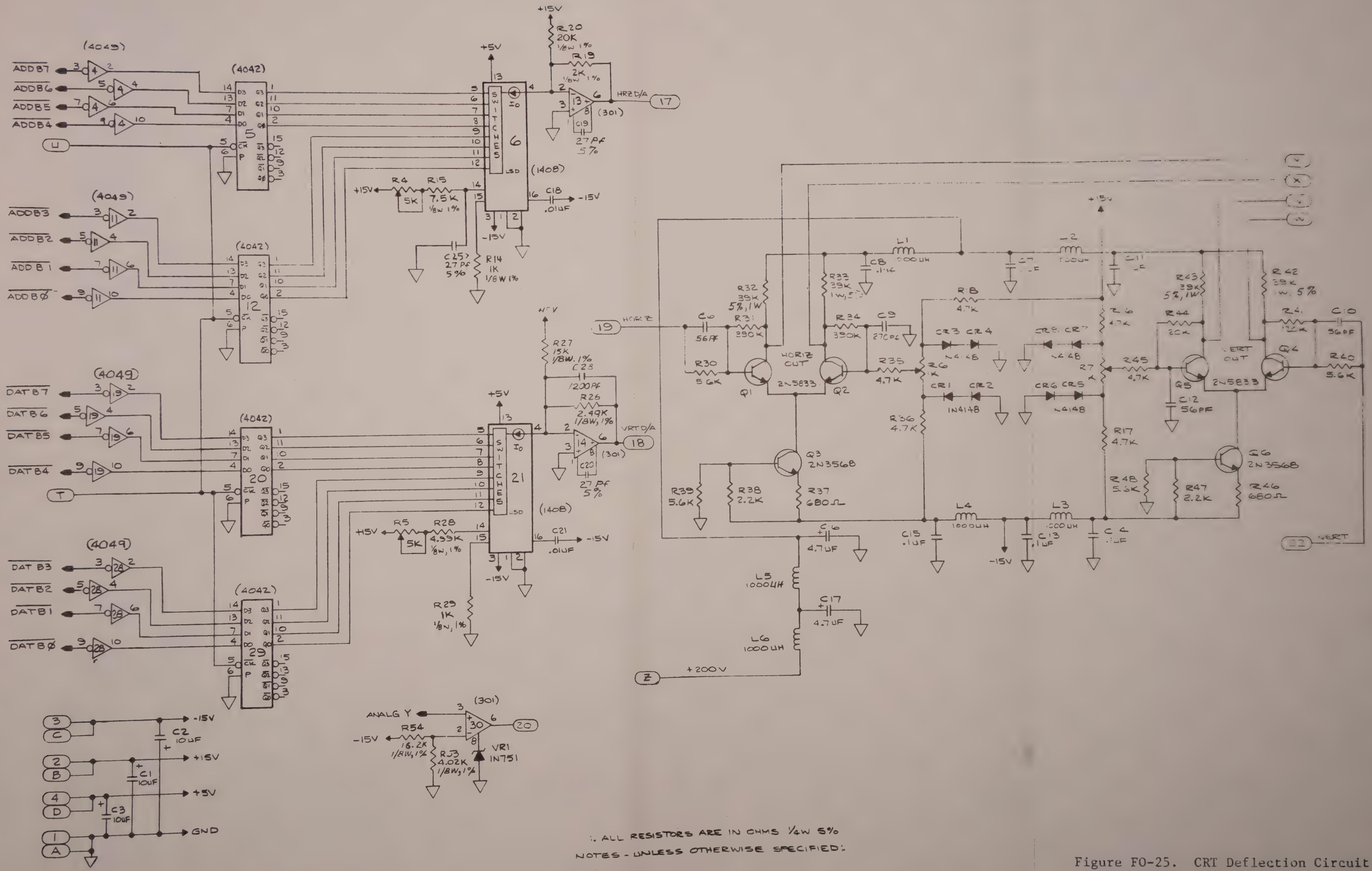

NOTES - UNLESS OTHERWISE SPECIFIED:

1. ALL RESISTORS ARE IN OHMS 1/4W 5%

Figure FO-25. CRT Deflection Circuit Card 2A4, Schematic Diagram (Sheet 1 of 2)

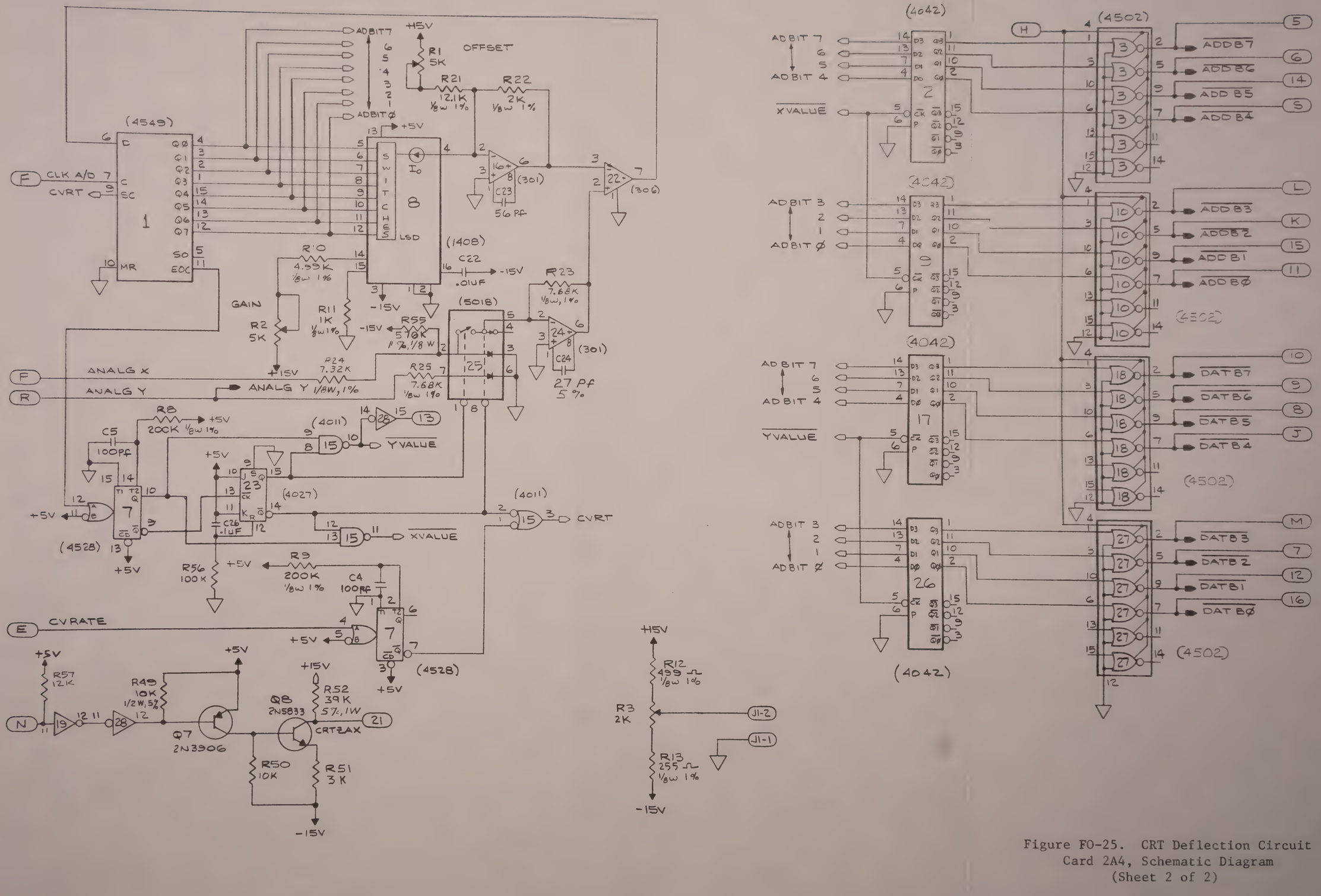

Figure FO-25. CRT Deflection Circuit
Card 2A4, Schematic Diagram
(Sheet 2 of 2)

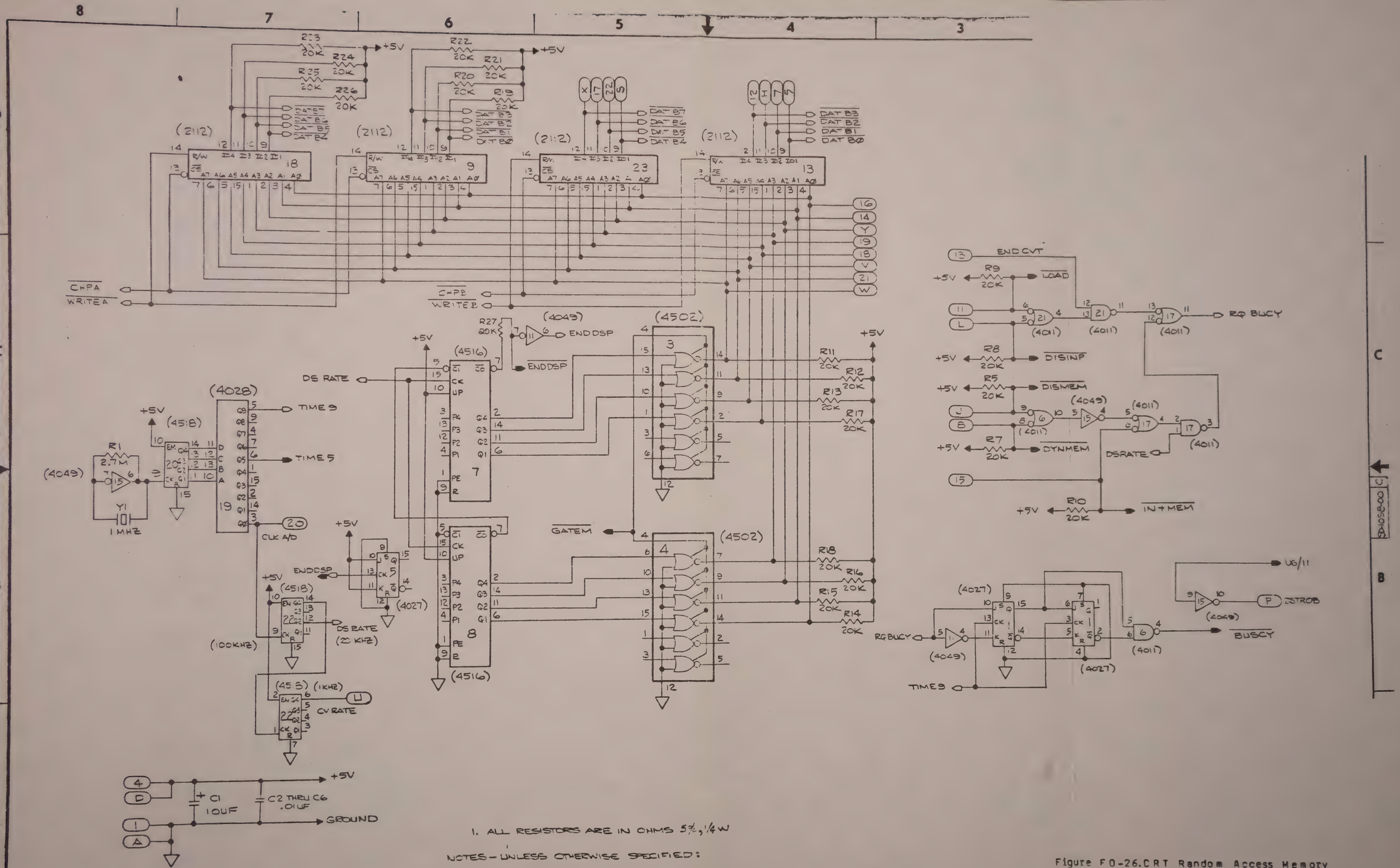

1. ALL RESISTORS ARE IN OHMS 5%, 1/4 W

NOTES – UNLESS OTHERWISE SPECIFIED:

Figure FO-26.CRT Random Access Memory Circuit Card 2A5, Diagram (Sheet 1 of 2)

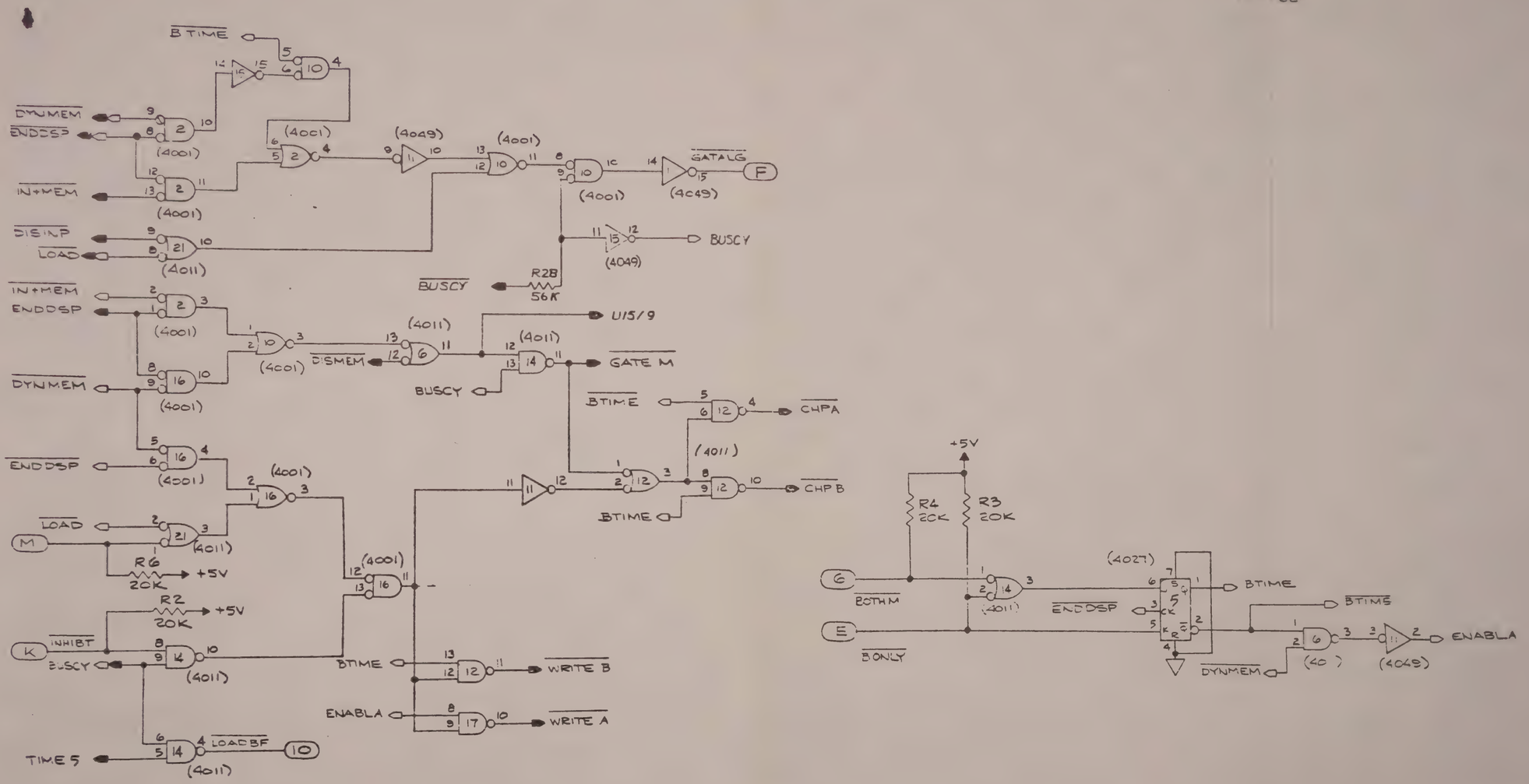

Figure FO-26. CRT Random Access Memory Circuit Card 2A5, Diagram (Sheet 2 of 2)

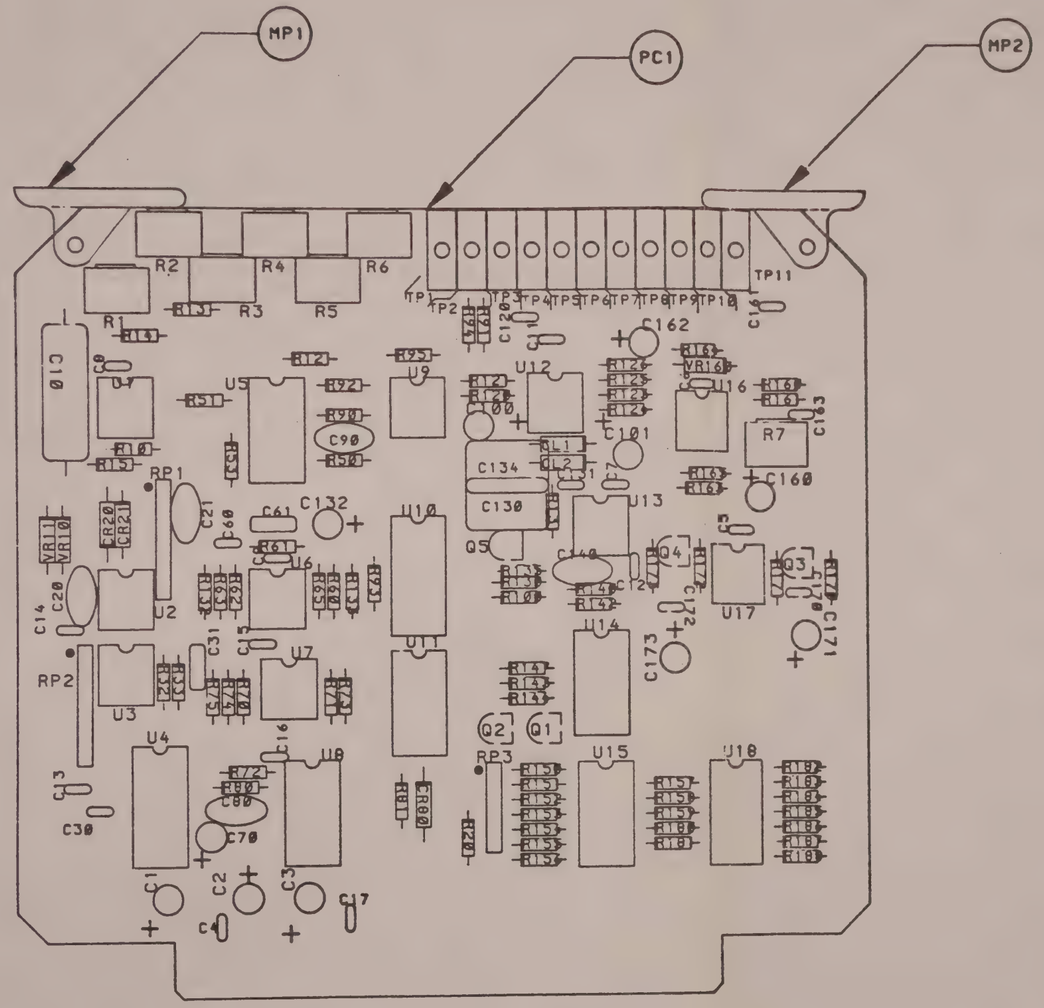

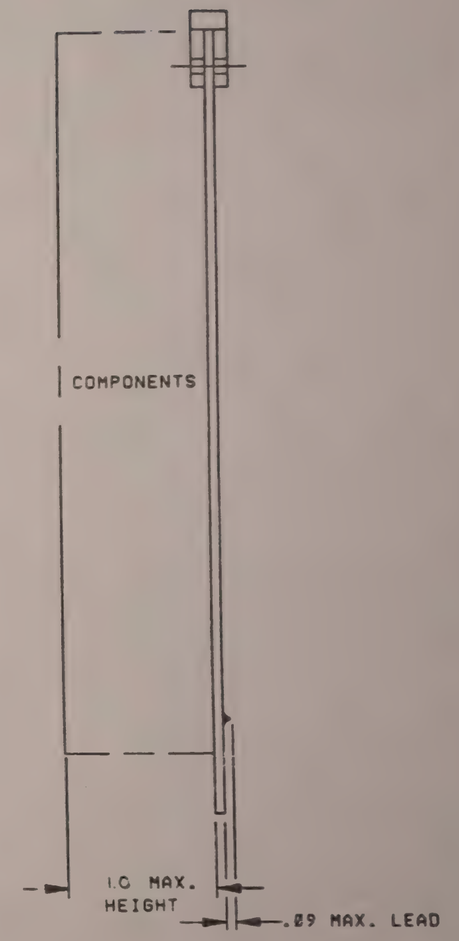

SEE SHT. 2 FOR REWORK

5. DO NOT LOAD C130, R135, Q5.
4. STAMP CURRENT REVISION ON ED SIDE OF BOARD.
3. SQUARE PAD DENOTES PIN 1 OF IC, CATHODE OF DIODE, POSITIVE END OF CAP, EMITTER OF TRANSISTOR, OR GATE OF FET.
2. FOR SCHEMATIC SEE SD-0521-15.
1. FOR LIST OF MATERIALS SEE 8000-0521-15.

NOTES UNLESS OTHERWISE SPECIFIED:

Figure FO-27. Model 520B3 PCB Assembly Sweep and VCO Board. (Part of 520B3-17) Diagram (Sheet 1 of 2)

JUMP R165 (WHERE SHOWN) TO FEEDTHRU (+15V).

CUT PAD FROM VERTICAL TRACE TO ISOLATE PAD WHERE SHOWN (R165).

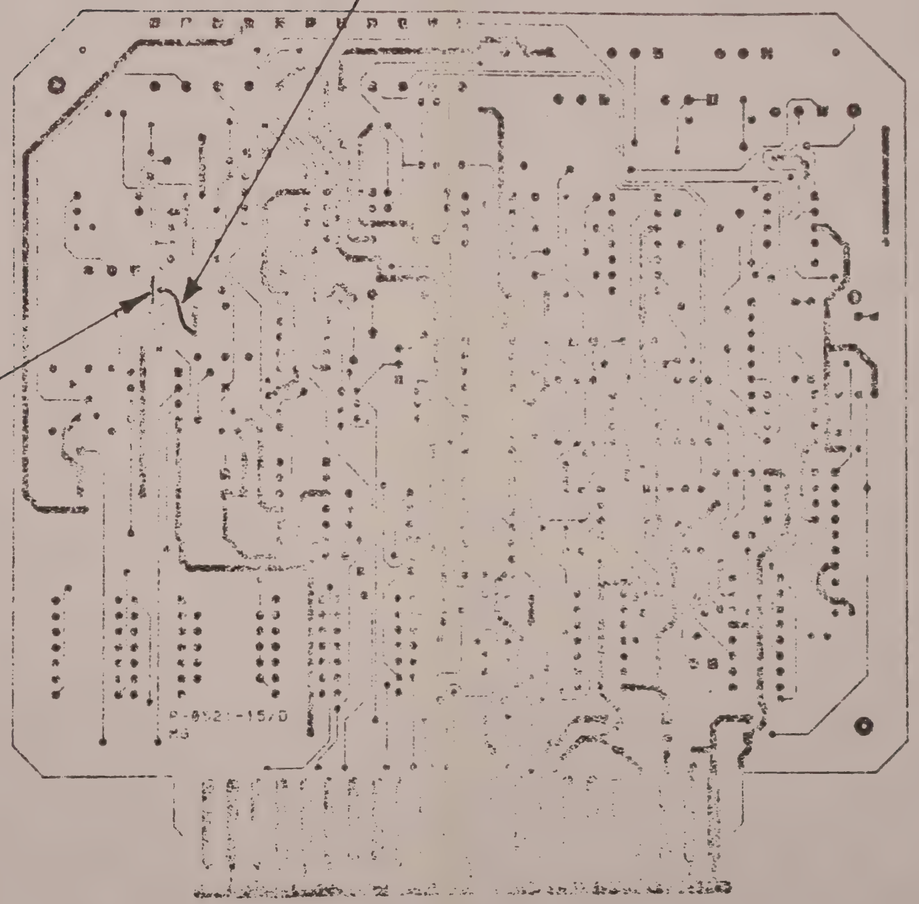

SOLDER SIDE

1 CUT

1 JUMP

6. FOR JUMPER USE WHT. WIRE P/N 6000-0700-09 LENGTH A/R.

NOTES - (CON'T. FROM SHT. 1)

Figure FO-27. Model 520B3 PCB Assembly Sweep and VCO Board. (Part of 520B3-17) Diagram (Sheet 2 of 2)

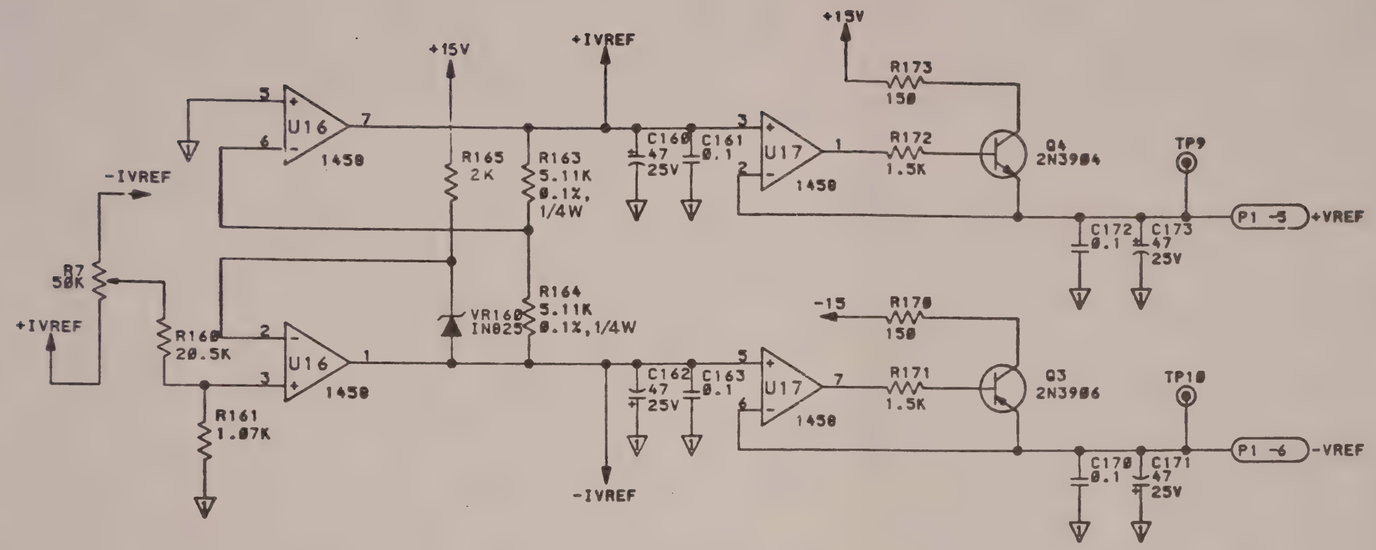

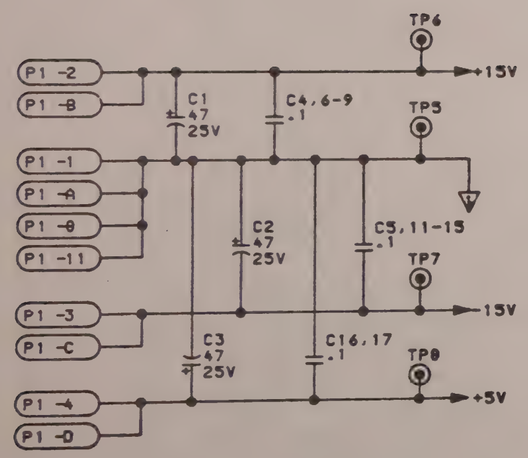

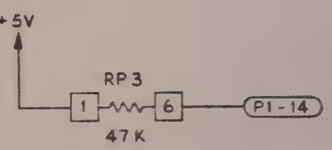

SPARES

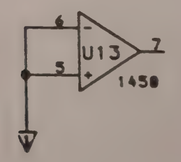

3. LOCATIONAL CODING
EX: XMIT SHT 2-B3

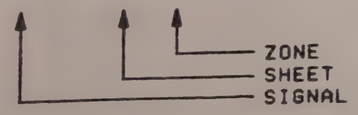

2. ALL CAPACITORS ARE MICROFARADS
1. ALL RESISTORS ARE IN OHMS, 1%, 1/4W.

NOTES - UNLESS OTHERWISE SPECIFIED:

Figure FO-28. Model 520B3 Sweep and VCO Board. (Part of 520B3-17) Diagram (Sheet 1 of 3)

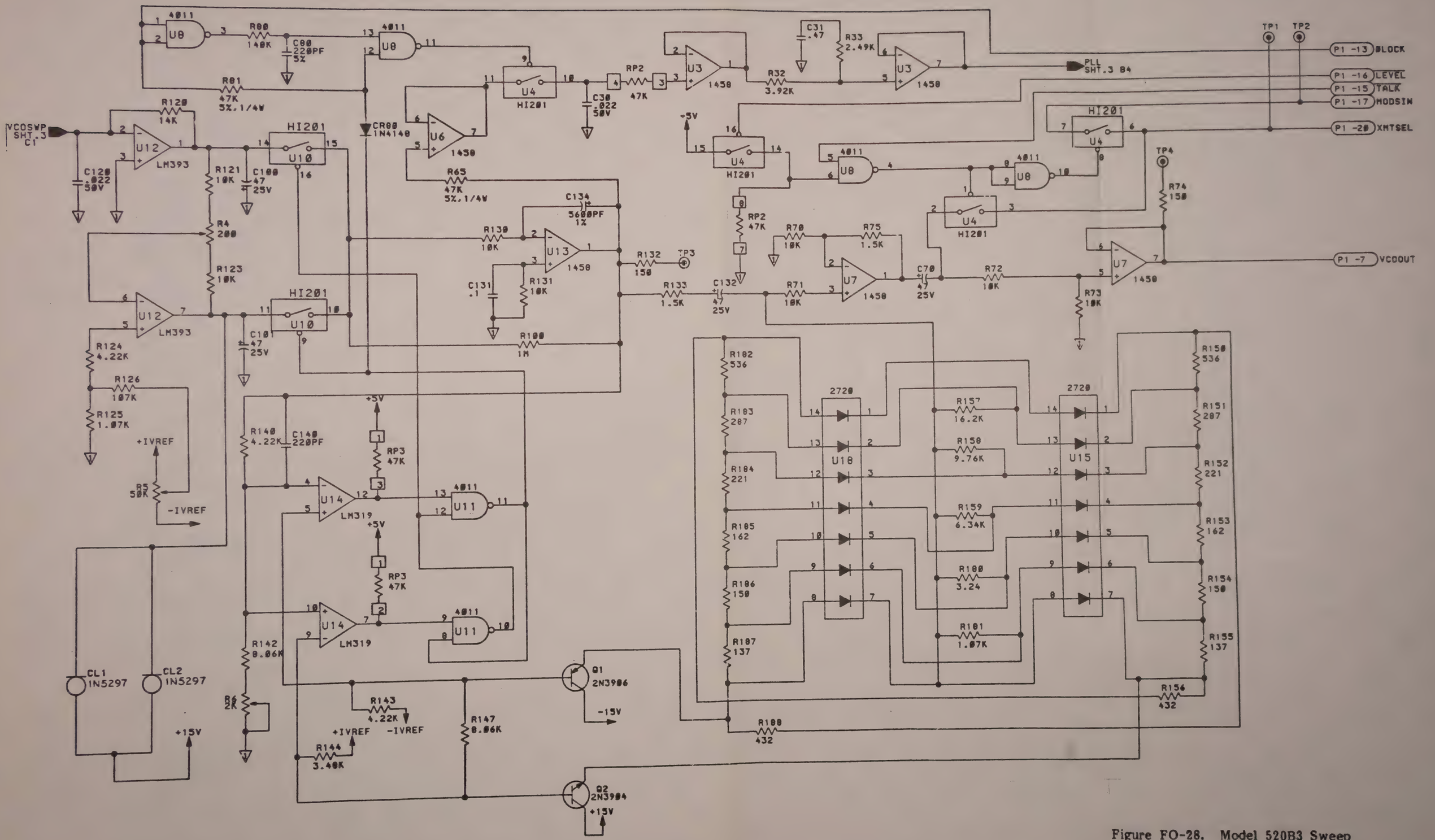

Figure FO-28. Model 520B3 Sweep and VCO Board. (Part of 520B3-17) Diagram (Sheet 2 of 3)

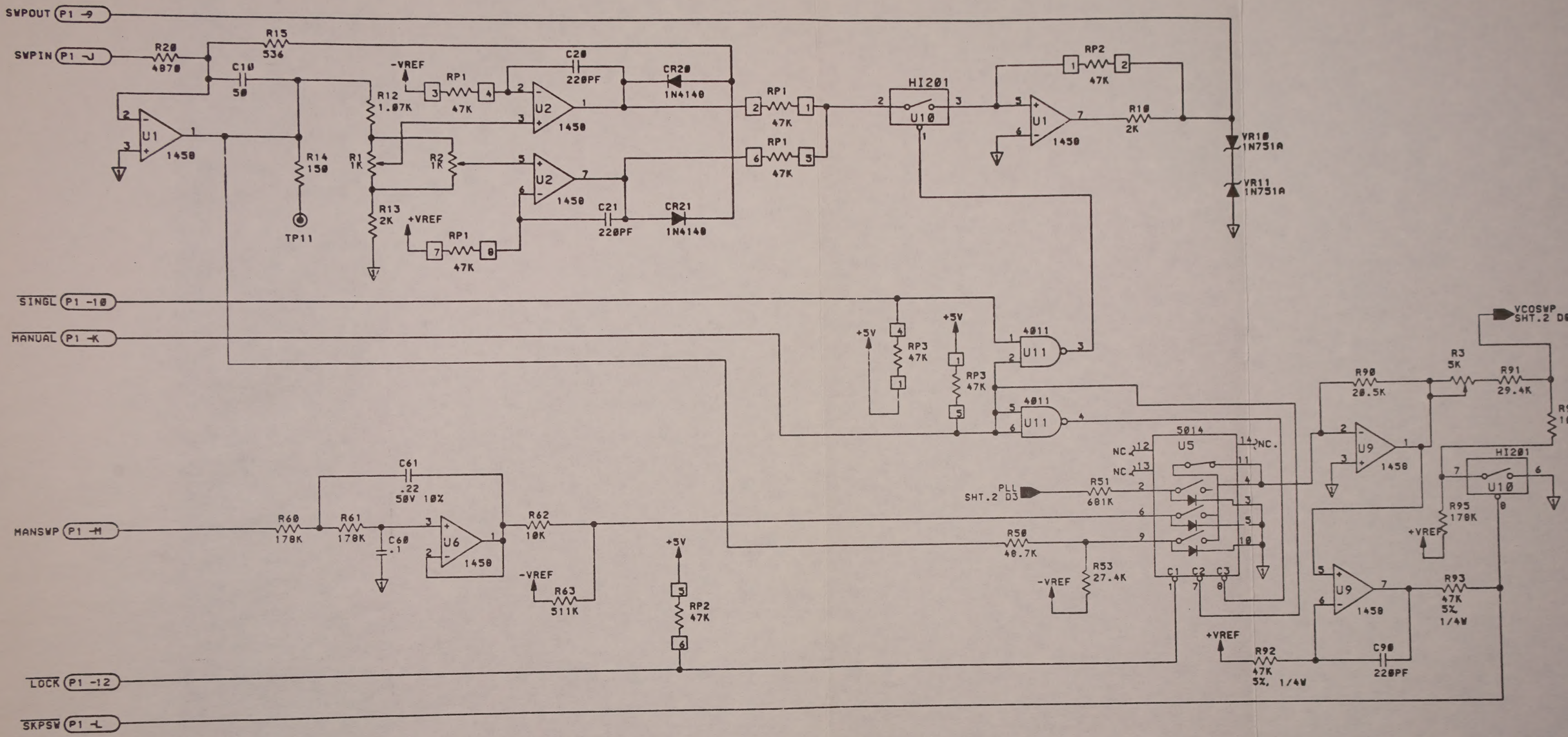

Figure FO-28. Model 520B3 Sweep and VCO Board. (Part of 520B3-17) Diagram (Sheet 3 of 3)

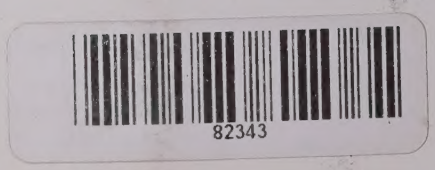
82343